AGENDA ITEM 8

STAFF REPORT

TYPE MEETING:	Regular Board	MEETING DATE:	July 3, 2013
SUBMITTED BY:	Lisa Coburn-Boyd Environmental Compliance Specialist Bob Kennedy Engineering Manager	PROJECT:	S1210-026000 DIV. NO. All
APPROVED BY:	☒ Rod Posada, Chief, Engineering ☒ German Alvarez, Assistant General Manager ☒ Mark Watton, General Manager		
SUBJECT:	Certification of the 2013 Supplemental Program Environmental Impact Report for the 2013 Wastewater Management Plan and Approval of the 2013 Wastewater Management Plan as a Final Plan and Document		

GENERAL MANAGER'S RECOMMENDATION:

That the Otay Water District's (District) Board of Directors (Board) certify that the Final Supplemental Program Environmental Impact Report (SPEIR) of the 2009 Water Resources Master Plan Program Environmental Impact Report(WRMP PEIR) for the District's 2013 Wastewater Management Plan (WWMP) has been completed in compliance with the California Environmental Quality Act, the current State Guidelines, and the District's local guidelines and that it reflects the independent judgment of the District. In addition, that the Board finds that the potentially significant effects of the District's 2013 WWMP will be avoided through the adoption of feasible mitigation measures shown in the SPEIR and the Mitigation, Monitoring, and Reporting Program for the SPEIR. Lastly, that the Board approve the 2013 Wastewater Management Plan as the final document.

COMMITTEE ACTION:

Please see Attachment A.

PURPOSE:

To obtain Board certification of the Final SPEIR (see Attachment C) for the Otay Water District's WWMP and approval of the 2013 WWMP (see Attachment G) as the final document.

ANALYSIS:

In August 2011, the Board awarded a professional engineering planning services agreement to Arcadis for the preparation of the 2013 Wastewater Management Plan and Supplemental Program Environmental Impact Report. The 2013 WWMP is a study of the District's wastewater collection and treatment system. The purpose of this study was to prepare a comprehensive plan that considers the required improvements to the wastewater collection system and to identify a preferred strategy for future wastewater management and recycled water generation and purchase. The WWMP will ensure a systematic and planned approach to a wastewater system commensurate with growth within the District's planning area and adjacent areas of influence, consistent with the San Diego Association of Governments' (SANDAG) forecasts through 2030.

Arcadis identified six (6) primary goals and objectives for the WWMP Update. These included:

- Update the wastewater flow projections.
- Assess capacity of the wastewater collection system to meet existing and future demand.
- Develop a list of sewer CIP projects needed to meet demand.
- Prepare recycled water supply and demand analysis.
- Look at future wastewater and recycled water management options.
- Prepare a SPEIR.

Part of the process to finalize the WRMP requires addressing the project's environmental impacts through the preparation of a Supplemental Program Environmental Impact Report (SPEIR). A supplement to the WRMP PEIR was used as the environmental document because the environmental impacts of the projects in the WWMP are not substantially different from those identified in the WRMP PEIR. Therefore, the analyses and mitigation efforts in the WRMP PEIR are incorporated in the WWMP SPEIR. Although the SPEIR does not eliminate the need for project-specific technical studies and environmental documents, it can reduce the amount of work required for each project in the future because it identifies expected impacts and their mitigation requirements.

The draft PEIR was submitted for a 45-day public review period on April 10, 2013 and three comment letters were received from the following agencies:

- California Dept. of Fish & Wildlife
- California Dept. of Transportation
- San Diego County Archaeological Society

Arcadis responded to these letters and has incorporated their comments into the final SPEIR. The letters and responses to comments can be found in Chapter 2 of the Final SPEIR.

FISCAL IMPACT: ☒ Joe Beachem, Chief Financial Officer

None.

STRATEGIC GOAL:

This Project supports the District's Mission statement, "To provide high value water and wastewater services to the customers of the Otay Water District in a professional, effective, and efficient manner" and the District's Strategic Goal 3.1.1, "Actively manage water supply and demand."

LEGAL IMPACT:

No legal impact is anticipated. However, in compliance with the California Environmental Quality Act process, the SPEIR will have the normal 30-day legal challenge period once recorded with the County of San Diego. The SPEIR will be recorded immediately following Board approval.

LC-B/BK:jf
P:\WORKING\CIP S1210 (SSMP & WWMP)\Subproject 026000 - WWMP\Staff Reports\BD 07-03-13, Staff Report, WWMP SPEIR, (LCB-BK).docx

Attachments:
Attachment A – Committee Action
Attachment B - PowerPoint Presentation
Attachment C – Final SPEIR
Attachment D - CEQA Findings of Facts
Attachment E – Draft SPEIR
Attachment F – Mitigation Monitoring and Reporting Program
Attachment G – Wastewater Management Plan (on disc)

ATTACHMENT A

SUBJECT/PROJECT:	Certification of the 2013 Supplemental Program Environmental Impact Report for the 2013 Wastewater Management Plan Update and Approval of the 2013 Wastewater Management Plan Update as a Final Plan and Document
S1210-026000	

COMMITTEE ACTION:

The Engineering, Operations, and Water Resources Committee (Committee) reviewed this item at a meeting held on June 19, 2013. The Committee supported Staff's recommendation.

NOTE:

The "Committee Action" is written in anticipation of the Committee moving the item forward for Board approval. This report will be sent to the Board as a Committee approved item, or modified to reflect any discussion or changes as directed from the Committee prior to presentation to the full Board.

ATTACHMENT B

July 3, 2013

Wastewater Management Plan and Supplemental Program Environmental Impact Report

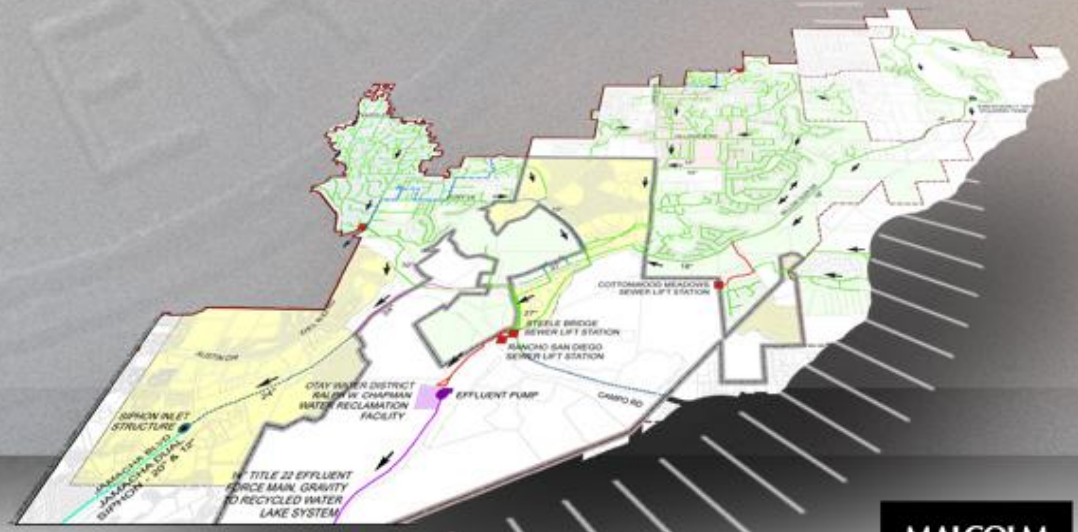

MALCOLM PIRNIE | ARCADIS

The Water Division of ARCADIS

WWMP Goal & Scope

- Land Use Database Model Update
- Wastewater Flow Projections
- Hydraulic Model Update
- Identify System Improvements
- Recycled Water Analysis
- Wastewater Management Options
- SPEIR Task Update

MALCOLM PIRNIE | ARCADIS
The Water Division of ARCADIS

Wastewater Service Area

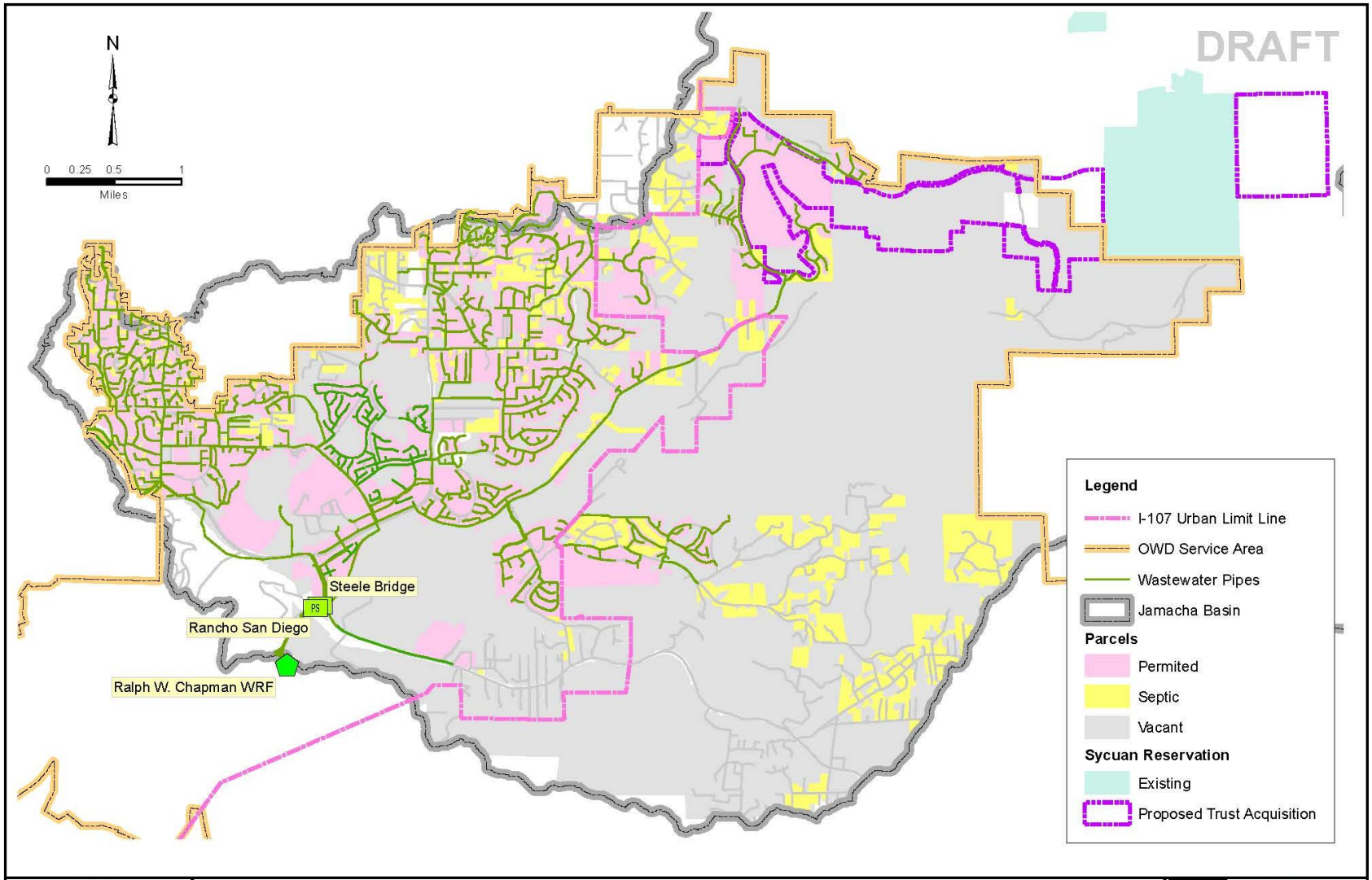

OTAY WATER DISTRICT
Wastewater Management Plan
PERMITTED/UNPERMITTED PARCELS

MALCOLM PIRNIE ARCADIS
The Water Division of ARCADIS

June 2012
FIGURE 2

2010 SANDAG Land Use Updates

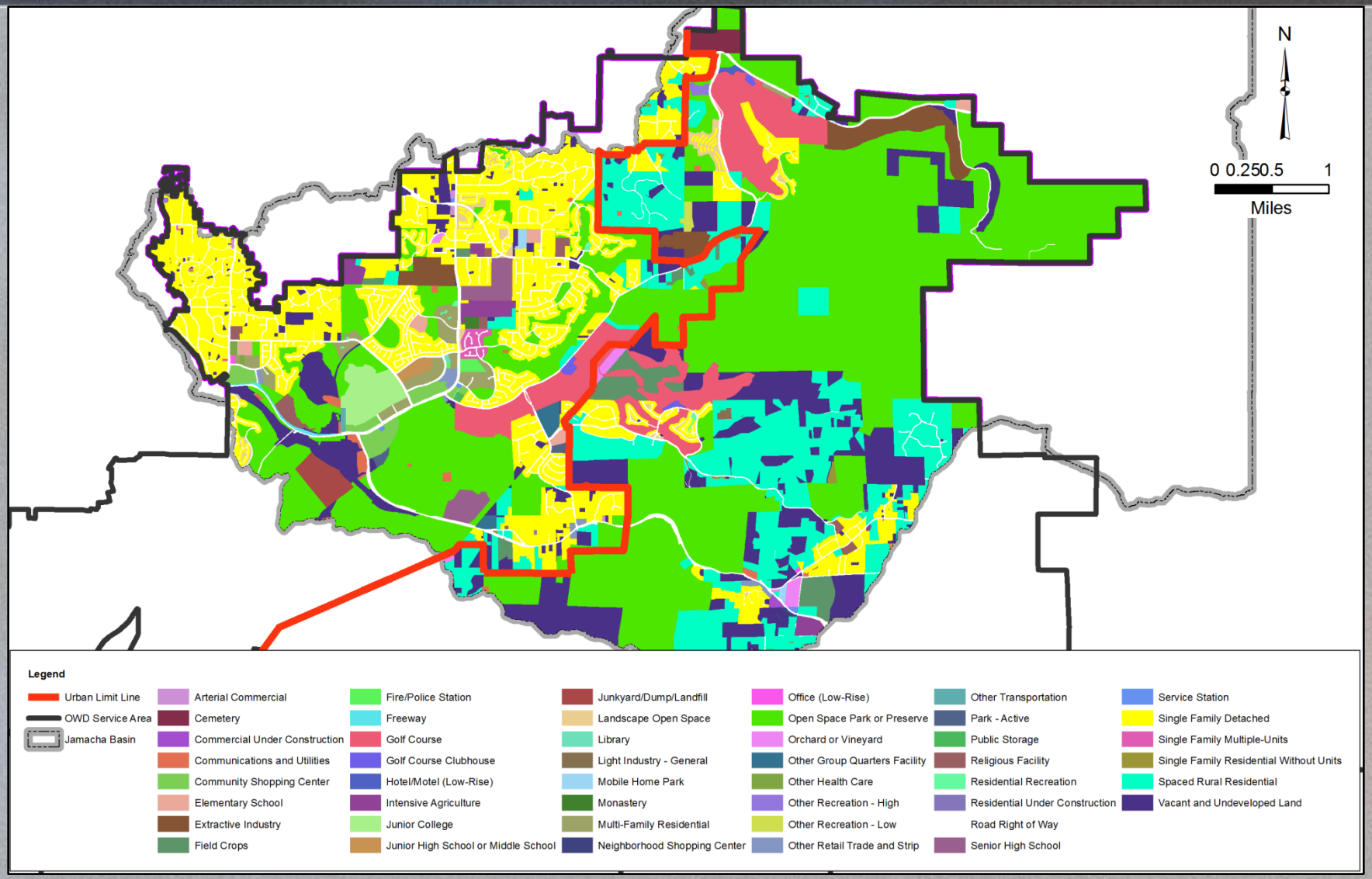

Existing System Deficiencies

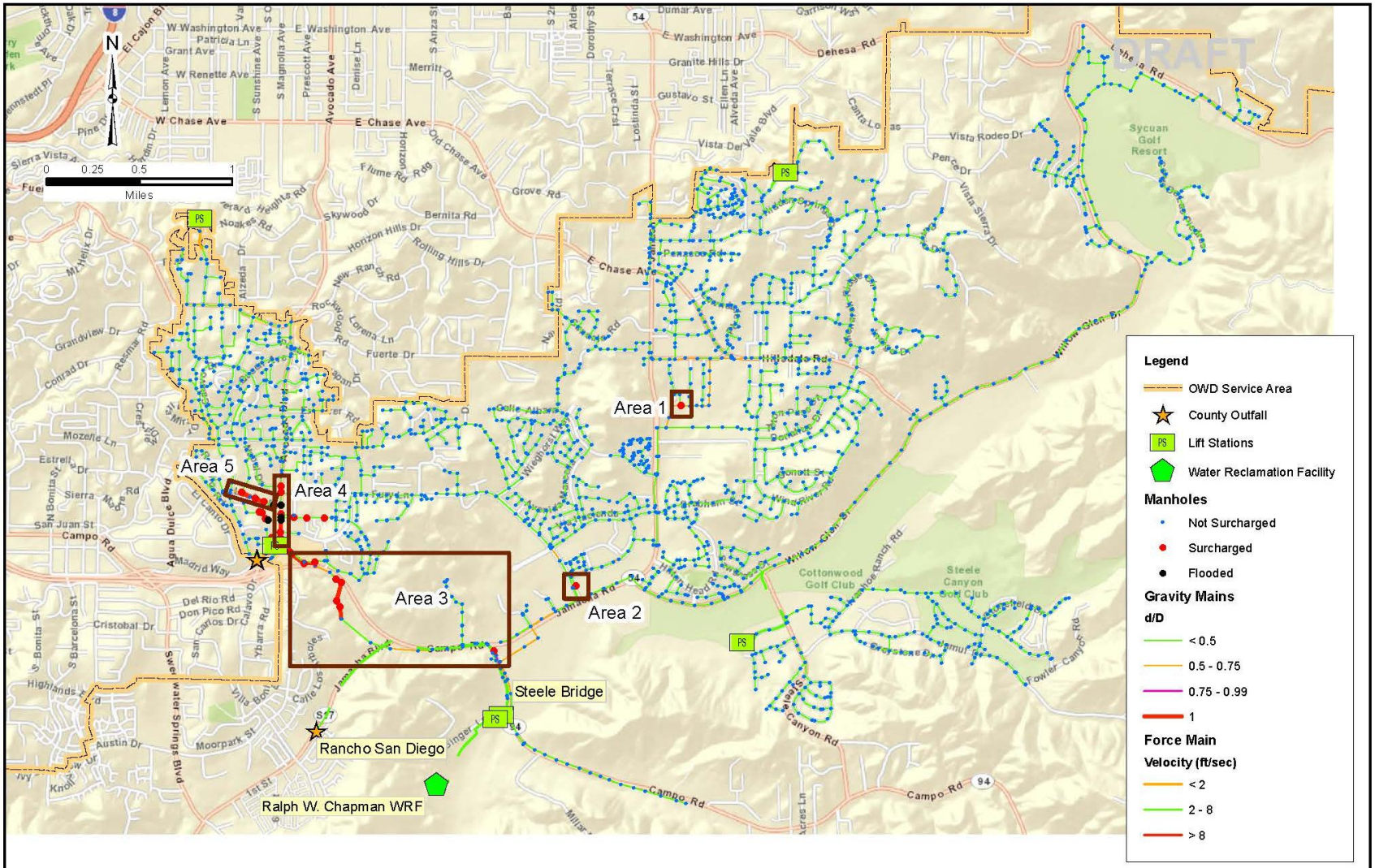

OTAY WATER DISTRICT
Wastewater Management Plan
EXISTING SYSTEM ASSESSMENT

June 2012
FIGURE 5

2030 System Deficiencies

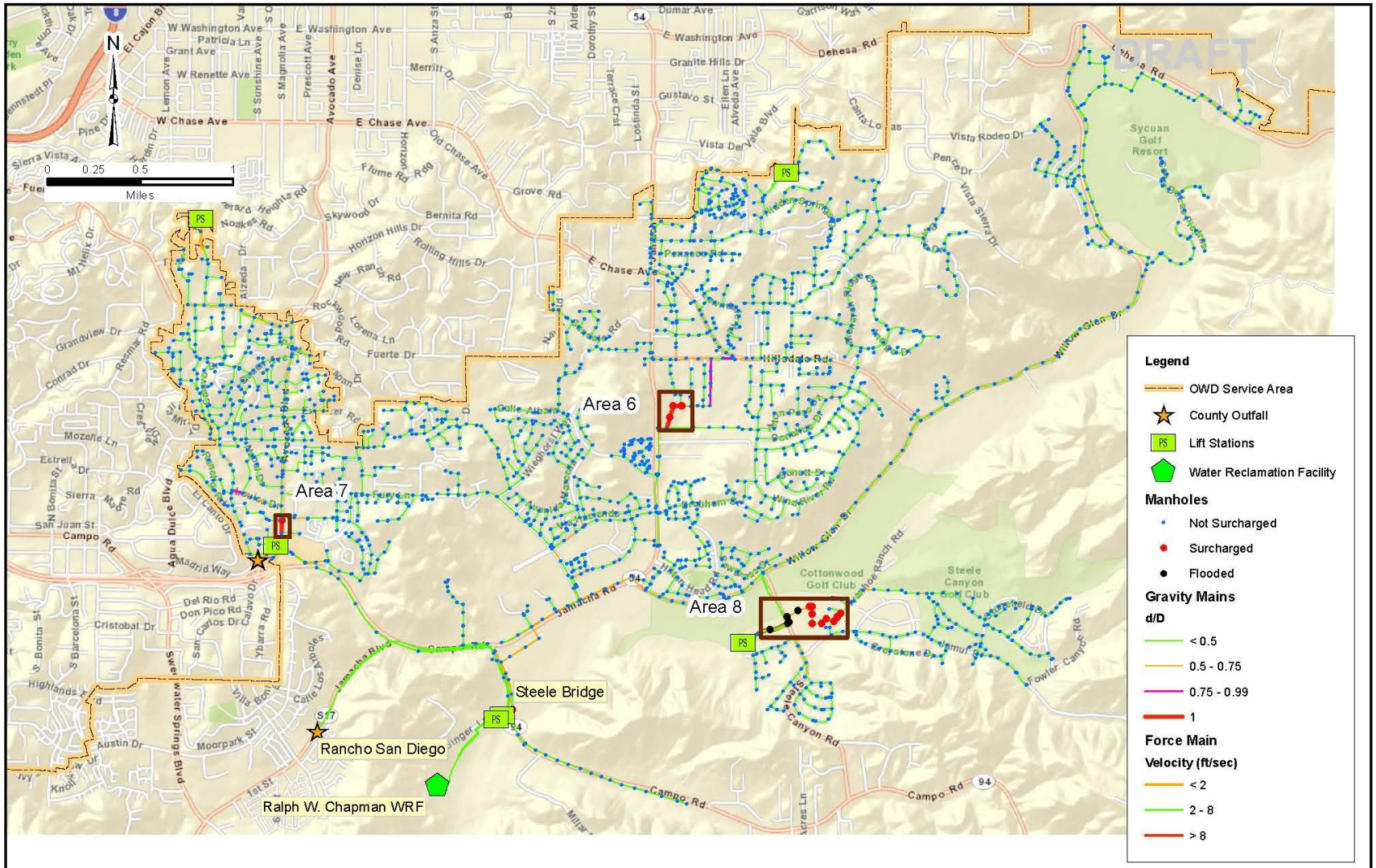

OTAY WATER DISTRICT
Wastewater Management Plan
FUTURE SYSTEM ASSESSMENT

June 2012
FIGURE 7

Wastewater Flow Projections

WWMP Table 2-3.
Updated Wastewater Flow Projections for the Jamacha Basin

Year	District					County				Basin Total
	Permitted / Connected	Unconnected		Sycuan	District Total	Permitted/ Connected	Unconnected		County Total	
		Vacant	Septic				Vacant	Septic		
2010	1.35	0.18	0.32	0	1.84	0.64	0	0	0.64	2.48
2015	1.41	0.18	0.32	0	1.92	0.78	0	0	0.78	2.70
2020	1.42	0.20	0.32	0.02	1.97	0.78	0.03	0	0.81	2.78
2025	1.44	0.23	0.40	0.02	2.09	0.79	0.02	0	0.81	2.91
2030	1.47	0.25	0.41	0.02	2.15	0.79	0.02	0	0.81	2.96

WWMP Table 4-3.
Projected Peak Day Recycled Water Demands vs. Existing Supply

Demand/Supply	Projected Recycled Water Demand					
	2010	2015	2020	2025	2030	2035
Ann. Ave. Demand (AFY)[1]	4,074	4,400	5,000	5,800	6,800	8,000
Ann. Ave. Demand (MGD)	3.64	3.93	4.46	5.18	6.07	7.14
Peak Day Demand (MGD)[2]	7.3	7.9	8.9	10.4	12.1	14.3
RCWRF Supply (MGD)[3]	1.0	1.0	1.0	1.0	1.0	1.0
SBWRP Maximum Supply (MGD)	5.3	6.0	6.0	6.0	6.0	6.0
Total Existing Supply (MGD)	6.3	7.0	7.0	7.0	7.0	7.0
Surplus/(Deficit) (MGD)	(1.0)	(0.9)	(1.9)	(3.4)	(5.1)	(7.3)

Recycled Water Analysis

Potential Additional Recycled Water Supply Options

- Expansion of the RWCWRF from 1.3 MGD to 2.6 MGD
- Additional purchases from the SBWRP
- Partnership with the City of Chula Vista on a regional WRF
- A new joint WRF with the County of San Diego
- Partnership with IBWC to produce recycled water

Wastewater Management Options

- Alternatives for wastewater management within the District
  A. Maintain wastewater treatment, do not expand RWCWRF
  B. Expand RWCWRF to 2.6 MGD
  C. Expand RWCWRF to 3.9 MGD
  D. Abandon RWCWRF and utilize County/Metro
  E. Abandon RWCWRF and utilize new joint County WRF

Given the uncertainties of the waiver for the Pt. Loma wastewater treatment plant, the recommendation is to maintain the RWCWRF at the current 1.3 MGD.

- Add solids handling facilities on the RWCWRF site for 1.3 MGD, expandable to 2.6 MGD

WWMP Supplemental PEIR

Supplemental PEIR to the 2009 WRMP prepared because the planning area for the WWMP was covered in the WRMP PEIR and environmental impacts analyzed have not changed

- **Wastewater System Projects Analyzed in the SPEIR**
- **Includes CIP projects to improve existing and future collection system**

SPEIR Process

- Notice of Preparation published
- Public Scoping Meeting held
- Draft SPEIR 45-day public review period
  - Three comment letters received (CDFW, Caltrans, SD County Archaeological Society)
  - Comments addressed in Final SPEIR
- Public Hearing (OWD Board meeting) to certify final SPEIR

Questions

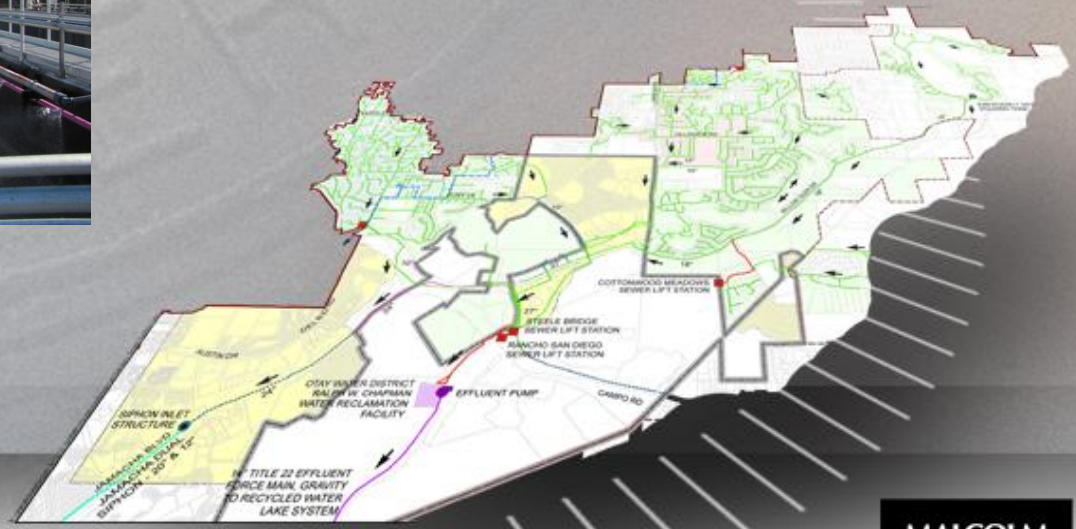

MALCOLM PIRNIE | ARCADIS

The Water Division of ARCADIS

ATTACHMENT C

Imagine the result

Wastewater Management Plan

Final SPEIR for the 2012 Water Resources Master Plan Update

June 2013

Table of Contents

CHAPTER 1.0 LIST OF PERSONS, ORGANIZATIONS, AND PUBLIC AGENCIES THAT HAVE COMMENTED OR GIVEN RECOMMENDATIONS ON THE DRAFT SPEIR 1

1.1 Introduction 1

1.2 Agencies and Organizations Comments 2

1.3 Responses to Comments Index 3

CHAPTER 2.0 COMMENTS AND RESPONSES 4

2.1 Letter 1: San Diego Archaeological Society, Inc. letter dated 14 April 2013 5

2.2 Letter 2: California Department of Fish and Wildlife letter dated 14 May 2013 6

2.3 Letter 3: California Department of Transportation letter dated 22 May 2013 9

CHAPTER 3.0 CHANGES MADE TO THE DRAFT SPEIR 11

3.1 Introduction 11

CHAPTER 4.0 STATEMENT OF LOCATION AND CUSTODIAN OF DOCUMENTS 14

Acronyms and Abbreviations

ACOE	U.S. Army Corps of Engineers
AMSL	above mean sea level
BLM	Bureau of Land Management
BMPs	Best Management Practices
Caltrans	California Department of Transportation
CAPCOA	California Climate Action Team
CBC	California Building Code
CCC	California Coastal Commission
CDFG	California Department of Fish and Game
CDFW	California Department of Fish and Wildlife
CDMG	California Department of Conservation, Division of Mines and Geology
CDTSC	California Department of Toxic Substances Control
CEC	California Energy Commission
CEQA	California Environmental Quality Act
CFR	Code of Federal Regulations
CIP	Capital Improvement Program
CO_2	Carbon Dioxide
CWA	Clean Water Act
DEH	County of San Diego Department of Environmental Health
DSPEIR	Draft Supplemental Programmatic Environmental Impact Report
EIR	Environmental Impact Report
ESA	Endangered Species Act
Fed/OSHA	Federal/Occupational Safety and Health Administration
FHA	Federal Highway Administration
Findings	Findings of Fact
ft	feet
FY	Fiscal Year
GDP	General Development Plan
GHG	Greenhouse gases
GPM	gallons per minute
HCP	Habitat Conservation Plan
HMBP	Hazardous Materials Business Plan

I-805	Interstate 805
IWRP	Integrated Water Resources Plan
LF	linear feet
MGD	millions of gallons per day
MRZ	Minerals Resources Zone
NAHC	Native American Heritage Commission
NCCP	Natural Communities Conservation Planning
NHPA	National Historic Preservation Society
NRHP	National Register of Historic Places
NOP	Notice of Preparation
OWD	Otay Water District
PDFs	Project Design Features
PEIR	Program Environmental Impact Report
PS	Pump Station
RCP	Regional Comprehensive Plan
RWCWRF	Ralph W. Chapman Water Recycling Facility
RWQCB	Regional Water Quality Control Board
SAMPs	Sub Area Master Plans
SANDAG	San Diego Association of Governments
SBWRP	South Bay Water Reclamation Plant
SCADA	Supervisory Control and Data Acquisition
SCPs	Standard Construction Practices
SD	San Diego
SDAPCD	San Diego Air Pollution Control District
SDCAS	San Diego County Archaeological Society, Inc.
SDCWA	San Diego County Water Authority
SIP	State Implementation Plan
SPAs	Specific/Sectional Planning Areas
SPEIR	Supplemental Program Environmental Impact Report
SR-94	State Route 94
SWPPP	Storm Water Pollution Prevention Plan
SWRCB	State Water Resources Control Board
UBC	Uniform Building Code
U.S.	United States

USDOT	United States Department of Transportation
USEPA	U.S. Environmental Protection Agency
USFWS	U.S. Fish and Wildlife Service
WRMP	Water Resources Master Plan
WTP	Water Treatment Plan
WWMP	Waste Water Management Plan

CHAPTER 1.0 LIST OF PERSONS, ORGANIZATIONS, AND PUBLIC AGENCIES THAT HAVE COMMENTED OR GIVEN RECOMMENDATIONS ON THE DRAFT SPEIR

1.1 Introduction

A draft version of this Supplemental Programmatic Environmental Impact Report (Draft SPEIR) was circulated for public review from April 10, 2013 to May 24, 2013. This chapter provides the names and addresses of persons, organizations, and public agencies that commented during this public review period.

In accordance with the California Environmental Quality Act (CEQA) Guidelines the Otay Water District (OWD) has evaluated the comments on environmental issues received from those agencies/parties and has prepared written responses to each pertinent comment relating to the adequacy of the environmental analysis contained within the Draft SPEIR. These responses are contained in Chapter 2, "Comments and Responses."

The agencies, organizations, and interested parties listed on the Responses to Comments Index (below) submitted comments on the Draft SPEIR during the public review period. Each comment submitted in writing is included, along with a written response where determined necessary. The individual comments were given reference numbers, which appear in the left margin next to the bracketed comment. For example, Letter 2 has comment numbers 2-1, 2-2, and 2-3.

In addition to the written responses contained in Chapter 2, and in response to comments received, certain revisions have been made to the Draft SPEIR. The revisions are presented in strikeout/underline format in Chapter 3, "Changes Made to the Draft SPEIR," and consist of changes to text that clarify information; only the pages that require revision are included therein. These changes do not constitute significant additional information that changes the outcome of the environmental analysis or necessitates recirculation of the document (CEQA Guidelines Section 15088.5). All such changes are presented in Chapter 3 and noted in the responses to comments.

1.2 Agencies and Organizations Comments

State Agencies	Address
California Department of Fish and Wildlife	3883 Ruffin Road, San Diego, CA 92123
California Department of Transportation	4050 Taylor Street, San Diego, CA 92110

County, City, and Other Local Agencies	Address
N/A	

Organizations	Address
San Diego County Archaeological Society, Inc.	P.O. Box 81106, San Diego, CA 92138

1.3 Responses to Comments Index

Commenter	Letter Reference	Comment Numbers
San Diego County Archaeological Society, Inc.	1	Not applicable*
California Department of Fish and Wildlife	2	2-1 through 2-3
California Department of Transportation	3	Not applicable*

*No comments requiring responses were included in the San Diego County Archaeological Society, Inc. letter dated 14 April 2013 and the California Department of Transportation letter dated 22 May 2013.

CHAPTER 2.0 COMMENTS AND RESPONSES

2.1

San Diego County Archaeological Society, Inc.

Environmental Review Committee

14 April 2013

To: Ms. Lisa Coburn-Boyd
Otay Water District
2554 Sweetwater Springs Boulevard
Spring Valley, California 91978-2004

Subject: Draft Supplemental Programmatic Environmental Impact Report
Otay Water District Wastewater Management Plan Update

Dear Ms. Coburn-Boyd:

I have reviewed the cultural resources aspects of the subject DSPEIR on behalf of this committee of the San Diego County Archaeological Society.

Based on the information contained in the DSPEIR, we agree with the contents of Section 4.3.

As project-specific impacts and their mitigation measures will be addressed in the project-level environmental documents, we request inclusion in the public review periods for each at that time.

Thank you for including SDCAS in the District's environmental review process for this DSPEIR.

Sincerely,

James W. Royle, Jr., Chairperson
Environmental Review Committee

cc: SDCAS President
File

P.O. Box 81106 San Diego, CA 92138-1106 (858) 538-0935

2.2

State of California – Natural Resources Agency
DEPARTMENT OF FISH AND WILDLIFE
South Coast Region
3883 Ruffin Road
San Diego, CA 92123
(858) 467-4201
www.wildlife.ca.gov

EDMUND G. BROWN JR., Governor
CHARLTON H. BONHAM, Director

May 14, 2013

Ms. Lisa Coburn-Boyd
Otay Water District
2554 Sweetwater Springs Boulevard
Spring Valley, CA 91978-2004

Subject: Comments on the draft Supplemental Program Environmental Impact Report (DSPEIR) for the Otay Water District Wastewater Management Plan Update (SCH# 2012071069)

Dear Ms. Coburn-Boyd:

The California Department of Fish and Wildlife (Department) has reviewed the above-referenced DSPEIR for the Otay Water District (OWD) Wastewater Management Plan Update dated April 9, 2013. The following statements and comments have been prepared pursuant to the Department's authority as Trustee Agency for natural resources affected by the project (California Environmental Quality Act, [CEQA] Guidelines §15386) and pursuant to our authority as a Responsible Agency under CEQA Guidelines section 15381 over those aspects of the proposed project that come under the purview of the California Endangered Species Act (Fish and Game Code §2050 *et seq.*) and Fish and Game Code section 1600 *et seq*. The Department also administers the Natural Community Conservation Planning (NCCP) Program.

The purpose of the OWD Wastewater Management Plan (WWMP) Update is to supplement the 2010 Water Resources Management Plan Update (WRMP) on which the Department provided comments (Department of Fish and Wildlife and the United States Fish and Wildlife Service joint letter dated September 3, 2009). The update includes planning for future wastewater collection systems and treatment needs.

The Department offers the following comments and recommendations to assist OWD in avoiding or minimizing potential impacts to biological resources.

2-1 1. The DSPEIR incorporates, by reference, mitigation measures Bio-1A through Bio-1E from the 2010 WRMP. We are unclear as to how these mitigation measures are relevant as they refer to specific Capital Improvement Program (CIP) projects (Res 640-3, Res 1655-1, Res 1090-2, Res 1296-4, Res 980-4, Res 860-1, Res 870-2, PS 978-2, PS 1090-1, PS 1296-2, PS LOPS, Pipeline P2177, R2089, and P2454) and not those projects being proposed in the current WWMP. The final SPEIR should identify how potential impacts to biological resources will be mitigated for WWMP projects.

2-2 2. It should be noted that CEQA Guidelines Section 15150(c) states that when an EIR uses incorporation by reference (as much of the DSPEIR does), the incorporated part of the referenced document should be briefly described or summarized.

Conserving California's Wildlife Since 1870

Ms. Lisa Coburn-Boyd
Otay Water District
May 14, 2013
Page 2 of 2

2-3 3. Because no specific locations, acreage, or biological information (habitat type, species composition, etc.) is provided for the projects identified in the DSPEIR, the Department expects to provide more useful comments and recommendations as subsequent CEQA documents are prepared and circulated for WWMP projects.

We appreciate the opportunity to comment on the above referenced DSPEIR. Questions regarding this letter and further coordination on these issues should be directed to Kyle Dutro at (858) 467-4267 or Kyle.Dutro@wildlife.ca.gov.

Sincerely,

David A. Mayer
Acting Environmental Program Manager
South Coast Region

Letter 2: California Department of Fish and Wildlife

2 -1 The first CDFW comment states that the mitigation measures Bio-1A through Bio-1E listed in the DSPEIR, which are incorporated by reference, specify that the mitigation measures are for the construction of certain specific Capital Improvement Projects (CIP) projects concerned with potable water and not wastewater projects listed in the WWMP.

The general understanding is that project design features, standard construction practices, and mitigation/performance measures (Bio 1A – Bio 1E) within the 2010 PEIR are described as being applicable to specific WRMP CIP projects as described, are to be applied to the projects presented in the WWMP. As presented in Chapter 3 of this Final SPEIR, text was added to the following respective portions of the Final SPEIR: Page 4-1, Chapter 4.0 SCOPE AND FORMAT OF ENVIRONMENTAL IMPACT ANALYSIS and Page 4-8, Section 4.2 Biological Resources.

2-2 The second CDFW comment states that pursuant to CEQA Guidelines Section 15150(c), when an EIR uses incorporation by reference, the incorporated part of the reference document should be briefly described or summarized. As presented in Chapter 3 of this Final SPEIR, the referenced document's specific passages citation is expanded in the following respective portions in the Final SPEIR: Page 4-9, Sections 4.2.3 Impacts and Mitigation and Section 4.2.4 Cumulative Impacts and Mitigation.

2-3 No response to the third CDFW comment is required.

2.3

STATE OF CALIFORNIA—BUSINESS, TRANSPORTATION AND HOUSING AGENCY EDMUND G. BROWN Jr., Governor

DEPARTMENT OF TRANSPORTATION
DISTRICT 11
PLANNING DIVISION
4050 TAYLOR STREET, MS 240
SAN DIEGO, CA 92110
PHONE (619) 688-6960
FAX (619) 688-4299
TTY 711
www.dot.ca.gov

Flex your power!
Be energy efficient!

May 22, 2013

11-SD-94 & 125
PM 13.13
Draft Supplemental EIR SCH 2012071069

Ms. Lisa Coburn-Boyd
Otay Water District
2554 Sweetwater Spring Blvd.
Spring Valley, CA 91978

Dear Ms. Coburn-Boyd:

The California Department of Transportation (Caltrans) appreciates the opportunity to have reviewed the Draft Supplemental Environmental Impact Report (DSEIR) SCH 2012071069 for the Otay Water District Wastewater Management Plan Update. Caltrans would like to make the following comments:

Encroachment

Any work performed within Caltrans right-of-way (R/W) will require discretionary review and approval by Caltrans and an encroachment permit will be required for any work within the Caltrans R/W prior to construction. Any Longitudinal Encroachment will require special approval from Caltrans.

As part of the encroachment permit process, the applicant must provide an approved final environmental document including the California Environmental Quality Act (CEQA) determination addressing any environmental impacts within the Caltrans' R/W, and any corresponding technical studies. If these materials are not included with the encroachment permit application, the applicant will be required to acquire and provide these to Caltrans before the permit application will be accepted. Identification of avoidance and/or mitigation measures will be a condition of the encroachment permit approval as well as procurement of any necessary regulatory and resource agency permits. Encroachment permit submittals that are incomplete can result in significant delays in permit approval.

Additional information regarding encroachment permits may be obtained by contacting the Caltrans Permits Office at (619) 688-6158. Early coordination with Caltrans is strongly advised for all encroachment permits.

"Caltrans improves mobility across California"

Ms. Lisa Coburn-Boyd
May 22, 2013
Page 2

If you have any questions, or require further information, please contact Trent Clark, at (619) 688-3140 or email at Trent_Clark@dot.ca.gov.

Sincerely,

JACOB M. ARMSTRONG, Chief
Development Review Branch

"Caltrans improves mobility across California"

CHAPTER 3.0 CHANGES MADE TO THE DRAFT SPEIR

3.1 Introduction

In response to comments received, certain revisions have been made to the Draft SPEIR. The following revisions are presented in strikeout/underline format and consist of changes to text that clarify information; only pages that require revisions are included herein. These changes do not constitute significant additional information that changes the outcome of the environmental analysis or necessitates recirculation of the document in accordance with state CEQA Guidelines Section 15088.5. All changes to the Draft SPEIR presented below are noted in the response to comments in Chapter 2 of this Final SPEIR.

Comment 2-1

CHAPTER 4.0
SCOPE AND FORMAT OF ENVIRONMENTAL IMPACT ANALYSIS

The discussion in this chapter resulted from supplemental information and alternatives to the OWD Wastewater Management Plan (WWMP). This included information related to existing site conditions, analyses of the type and magnitude of individual and cumulative environmental impacts, and feasible mitigation measures that could reduce or avoid environmental impacts. Analyses performed and presented in Chapter 4.0 of the 2010 Water Resources Master Plan (WRMP) PEIR are included in their entirety by reference (Otay 2010).

When the analyses, specifically project design features, standard construction practices, and mitigation/performance measures refer to specific projects, it shall be assumed that these analyses apply to the CIP projects presented in the WWMP Section 3.3.4.

The SPEIR is intended as a basic reference document to avoid unnecessary repetition of facts or analysis contained in the 2010 WRMP PEIR. Therefore, this SPEIR only contains significant updated technical information or other significant supplemental information to supplement the previous PEIR for the WWMP analysis.

4.2 Biological Resources

The 2010 PEIR for the 2009 WRMP Update described existing conditions within the planning area with respect to biological resources; the potential physical environmental effects (direct, indirect, and/or cumulative) related to these issues resulting from development of projects under the WWMP; and the project design features, standard construction practices, and mitigation/ performance measures to reduce or avoid the identified impacts (Otay 2010).

This section of the SPEIR is intended to supplement the previous information and analysis contained within the corresponding section of the 2010 PEIR. The analysis of the WWMP does not significantly differ, unless indicated below, from the original analysis within the 2010 PEIR and therefore does not need additional analysis/updating. That information is hereby incorporated by reference (Otay 2010).

The project design features, standard construction practices, and mitigation/performance measures (Bio 1A – Bio 1E) within the 2010 PEIR are described as being applicable to specific WRMP CIP projects. These project design features, standard construction practices, and mitigation/performance measures (Bio 1A – Bio 1E) as described are to be applied to the CIP projects presented in the WWMP Section 3.4.4 Description of Projects when these projects are undertaken.

COMMENT 2-2

4.2.3 Impacts and Mitigation

Issue 1 – Sensitive Species and Habitats

Biological Resources Issue 1 Summary	
Would implementation of the 2012 WRMP Update result in a substantial adverse effect, either directly or through habitat modifications, on any sensitive or special-status species or sensitive habitats?	
Impact: Implementation of the 2012 WRMP Update would result in direct impacts to sensitive plant and animal species.	**Mitigation**: Pre-construction surveys and noise attenuation (Bio-1A through Bio-1C); shielding of construction lighting (Bio-1D); delineation of construction limits and staging areas (Bio-1E)
Significance Before Mitigation: Potentially significant.	**Significance After Mitigation**: Less than significant.

The construction and operation of the CIP projects identified in the WWMP fall wholly within the Northeast corner of the 2009 WRMP Update area. Therefore, comparable to the 2009 WRMP as analyzed by the 2010 PEIR, impacts to sensitive species and habitats will be avoided or fully mitigated as presented and summarized in Section 4.2.3 and Table ES-1~~. That information is hereby incorporated by reference~~ (Otay 2010).

4.2.3 Cumulative Impacts and Mitigation

Sensitive Species and Habitats

Biological Resources Cumulative Issue Summary		
Would implementation of the 2012 WRMP Update have a cumulatively considerable contribution to a cumulative biological resources impact considering past, present, and probable future projects?		
Cumulative Impact	**Significance**	**Proposed Project Contribution**
Regional loss of sensitive plants, animals, and vegetation communities.	Potentially significant.	Not cumulatively considerable with implementation of performance measures Bio-1A through Bio-1E.

The construction and operation of the CIP projects identified in the WWMP fall wholly within the Northeast corner of the 2009 WRMP Update area. Therefore, comparable to the 2009 WRMP as analyzed by the 2010 PEIR, cumulative impacts to sensitive species and habitats will be avoided or fully mitigated as presented and summarized in Section 4.3.4 and Table ES-2~~. That information is hereby incorporated by reference~~ (Otay 2010).

CHAPTER 4.0 STATEMENT OF LOCATION AND CUSTODIAN OF DOCUMENTS

STATEMENT OF LOCATION AND CUSTODIAN OF DOCUMENTS OR OTHER MATERIALS THAT CONSTITUTE A RECORD OF PROCEEDINGS

June 2013

Project Name Otay Water District 2012 WRMP Update

Reference Case Numbers SCH# 2012071069

CEQA [Section 21081.6(a)(2)] requires that the lead agency (in this case the Otay Water District) specify the location and custodian of the documents or other material that constitute the record of proceedings upon which its decision is based. It is the purpose of this statement to satisfy this requirement.

Location of Documents and Other Materials that Constitute the Record of Proceedings

Otay Water District
2554 Sweetwater Springs Boulevard
Spring Valley, California 91978-2096

Custodian

Ms. Lisa Coburn-Boyd
Otay Water District
2554 Sweetwater Springs Boulevard
Spring Valley, California 91978-2096

ATTACHMENT D

Imagine the result

Wastewater Management Plan
Final Supplemental PEIR
for the 2012 Water Resources Master Plan Update

CEQA Findings of Fact

June 2013

Table of Contents

CHAPTER 1.0 INTRODUCTION 1
CHAPTER 2.0 ACRONYMS AND ABBREVIATIONS 2
CHAPTER 3.0 PROJECT DESCRIPTION 4
3.1 Planning Area 4
3.2 Project Characteristics 4
3.3 Project Purpose and Objectives 9
3.4 Required Permits and Approvals 11
CHAPTER 4.0 BACKGROUND 14
CHAPTER 5.0 RECORD OF PROCEDINGS 15
CHAPTER 6.0 FINDINGS REQUIRED UNDER CEQA 16
CHAPTER 7.0 LEGAL EFFECTS OF FINDINGS 18
CHAPTER 8.0 mitication monitoring and reporting program 19
CHAPTER 9.0 SIGNIFICANT EFFECTS AND MITIGATION MEASURES 20
9.1 Air Quality and Global Climate Change 20
9.2 Biological Resources 21
9.3 Cultural Resources 22
9.4 Energy 23
9.5 Geology, Soils, and Paleontology 24
9.6 Hydrology and Water Quality 25
9.7 Landform Alteration and Visual Aesthetics 26
9.8 Land Use and Planning 27
9.9 Noise 28
9.10 Public Safety 29
9.11 Growth Inducement 30
9.12 CEQA Checklist Items Not Applicable to the 2012 WRMP Update 32
CHAPTER 10.0 PROJECT ALTERNATIVES 34
10.1 No Project Alternative 34
10.2 Eliminate Wastewater Treatment Within District 35
10.3 Recycle All Wastewater Flows Within District 35
10.4 Recycle All Wastewater Flows Within District and Expanding To Accept Wastewater From Other Service Areas 36
10.5 Environmentally Superior Alternative 37

CHAPTER 1.0 INTRODUCTION

The Otay Water District (OWD) was authorized as a California Special District by the State Legislature in 1956, under the provisions of the Municipal Water District Law of 1911, and thereby gained its entitlement to imported water. As a member agency of the San Diego County Water Authority (SDCWA), the OWD purchases all of the potable water that it delivers from the SDCWA. The SDCWA is responsible for transmission of the imported water supply within San Diego County to its member agencies, and is itself a member of the Metropolitan Water District of Southern California.

In 2002, the OWD developed a comprehensive Water Resources Master Plan (WRMP) that combined all previously existing master plans and facility plans into one system-wide plan outlining the Capital Improvement Program (CIP) projects required to serve their customers. The following three phases were identified in the 2002 WRMP: Phase I (2002-2006), Phase II (2007-2016), and Phase III (2017-2030).

The 2009 WRMP Update revised the OWD's 2002 WRMP; identifying the potable and recycled water CIP facilities (e.g., pump stations, storage reservoirs, transmission mains), and associated probable cost estimates, to meet projected water market demands within the OWD planning area and adjacent areas of influence; and developed a phased approach to implement the CIP projects during the following time frames: 2009-2016 (Phase II) and 2017-Ultimate (Phase III).

In compliance with the California Environmental Quality Act (CEQA), the OWD has prepared these Findings of Fact (Findings) in support of a Final Supplemental Program Environmental Impact Report (SPEIR) for the proposed 2012 WRMP Update. The purpose of the 2012 WRMP Update [Wastewater Management Plan (WWMP)] is to expand on the 2009 WRMP Update to include planning for future wastewater collection system and treatment needs. The CIP projects associated with wastewater transmission and treatment parallel and supplement those projects included and analyzed in the 2009 WRMP Update.

CHAPTER 2.0 ACRONYMS AND ABBREVIATIONS

ACOE	U.S. Army Corps of Engineers
AMSL	above mean sea level
BLM	Bureau of Land Management
CCC	California Coastal Commission
CCR	California Code of Regulations
CDFW	California Department of Fish and Wildlife
CEQA	California Environmental Quality Act
CFR	Code of Federal Regulations
CIP	Capital Improvement Program
CWA	Clean Water Act
DEH	County of San Diego Department of Environmental Health
EIR	Environmental Impact Report
ESA	Endangered Species Act
FHA	Federal Highway Administration
Findings	Findings of Fact
FY	Fiscal Year
GPM	gallons per minute
LF	linear feet
MGD	millions of gallons per day
MMRP	Mitigation Monitoring and Reporting Program
NHPA	National Historic Preservation Society
NRHP	National Register of Historic Places
NOP	Notice of Preparation
OWD	Otay Water District
PDFs	Project Design Features
PEIR	Program Environmental Impact Report
PS	Pump Station
RCP	Regional Comprehensive Plan
RWCWRF	Ralph W. Chapman Water Recycling Facility
RWQCB	Regional Water Quality Control Board

SANDAG	San Diego Association of Governments
SBWRP	South Bay Water Reclamation Plant
SCPs	Standard Construction Practices
SD	San Diego
SDAPCD	San Diego Air Pollution Control District
SDCWA	San Diego County Water Authority
SPEIR	Supplemental Program Environmental Impact Report
U.S.	United States
USDOT	United States Department of Transportation
USFWS	U.S. Fish and Wildlife Service
WRMP	Water Resources Master Plan
WWMP	Waste Water Management Plan

CHAPTER 3.0 PROJECT DESCRIPTION

3.1 Planning Area

As shown in Figure 3-1, the OWD service area is regionally located within south central San Diego County, and is bounded by rural lands to the east, the Padre Dam Municipal Water District to the north, the Helix Water District to the northwest, the Sweetwater Authority and the City of San Diego to the west, and the International Border with Mexico to the south. There are several major transportation routes though which access to the OWD is possible, including Highway 94 in the north, Interstate Highways 805 and 905 in the south and State Route 125 in the north and south.

The OWD service area consists of 80,320 acres (125.5 square miles), within south central San Diego County. Elevations within the planning area range from 59 feet above mean sea level (AMSL) to 2,605 feet AMSL. The OWD water service area is divided into two distinct systems: the North District, serving San Diego County communities above Sweetwater Reservoir, and the South District, serving the City of Chula Vista and Otay Mesa. Within these two area systems are five primary operating systems for potable water, including the Regulatory, La Presa, and Hillsdale systems in the North District and the Central and Otay Mesa systems in the South District. The OWD also maintains and operates a recycled water system in the South District (Central and Otay Mesa operating systems). In addition to water supply, the OWD also provides sewage collection, wastewater treatment, and disposal services to users within a small portion of the North District, consisting of the northeastern portion of the Casa de Oro-Mount Helix community extending east to Rancho San Diego and south to Jamacha (Figure 3-2).

3.2 Project Characteristics

The Otay Water District's existing wastewater system includes collection system pipelines, pump stations, and the wastewater treatment plant (RWCWRF).

The wastewater system includes approximately 95 miles of collection system pipelines, of which 92 miles are gravity sewers and 3 miles are force mains. The District owns approximately 78 miles of the gravity sewers, and the rest is owned by the County (please refer to Figure 3-1 in the 2012 WWMP). The gravity sewers range in diameter from 4 inches to 27 inches with the majority (84%) of the collection system being comprised of 8-inch diameter pipes. The force mains range in diameter from 4 inches to 24 inches.

Pipeline projects involve trench excavation, preparing the bed for pipe placement, laying the pipe in the trench, filling the trench, and restoring the disturbed surface area. Where it is not feasible to install a pipeline within a street right-of-way, the OWD makes every effort to use the shortest possible route between connection points to minimize ground-level impacts.

Figure 3-1

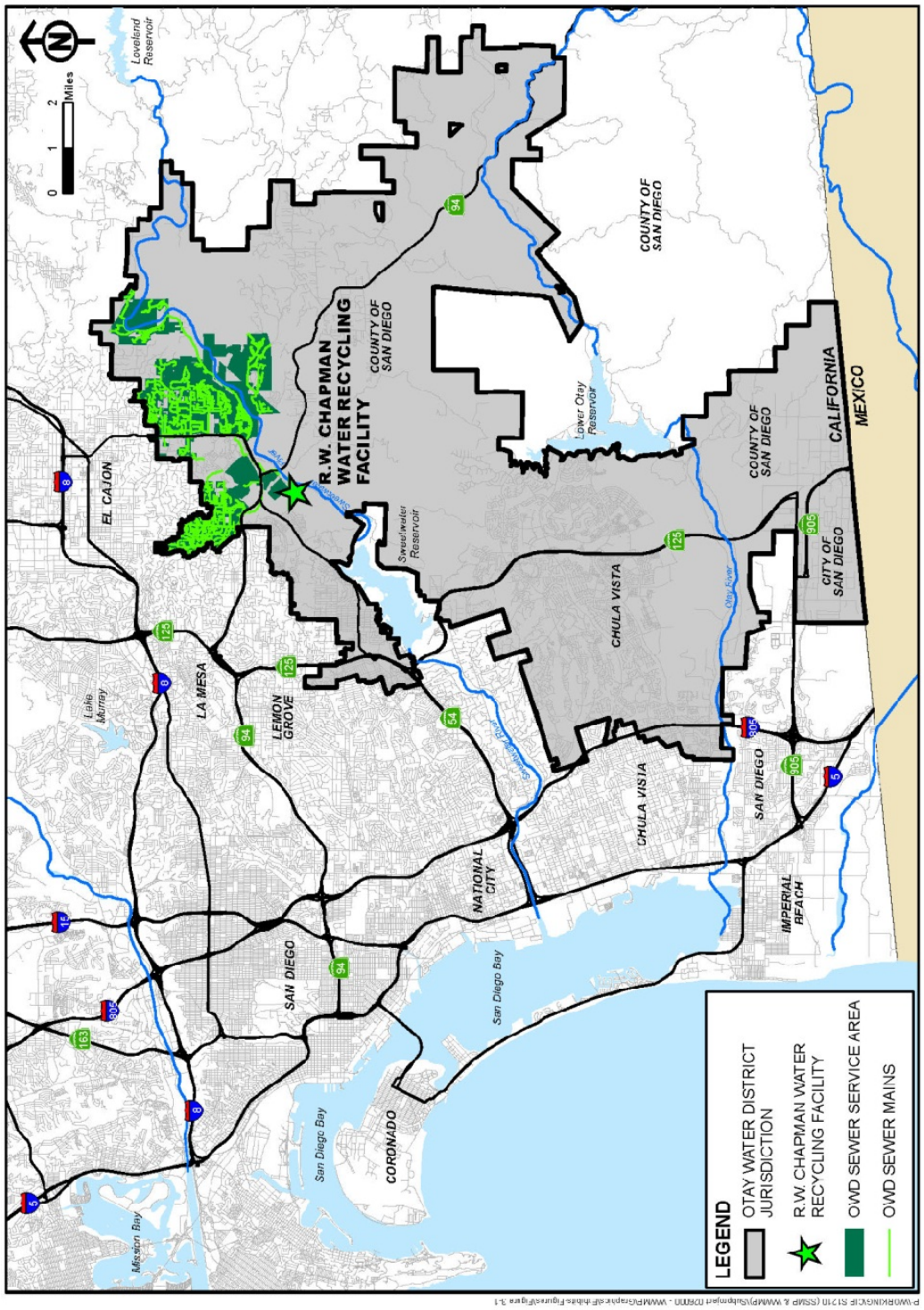

REGIONAL LOCATION MAP

In general, pump capacity is reported in units of gallons per minute (gpm) or millions of gallons per day (MGD). The District owns and operates the RWCWRF. The existing capacity of the RWCWRF is 1.3 MGD, and the facility is located on a site master-planned for an ultimate build-out capacity of 3.9 MGD. The RWCWRF is a scalping plant so that any flows that exceed the capacity of the plant are disposed of via the Rancho San Diego Outfall facilities to the San Diego Metropolitan System. This is also the case if the facility is shut down for any reason. The RWCWRF provides tertiary treatment that produces reclaimed water to meet Title 22 standards. The plant was upgraded in 2012 to include de-nitrification to reduce the effluent total nitrogen levels.

Collection System Projects

Table 3-1 summarizes the collection system projects that are included in OWD's existing capital improvement budget. This budget includes projects from fiscal year 2013 through fiscal year 2018. These projects incorporate pipeline rehabilitation and/or replacement, manhole rehabilitation and/or replacement and pipeline spot repairs (less than 10 feet).

Table 3-1. Current Wastewater Collection System Projects – FY 2013 through FY 2018 Budget

CIP #	Description	Est. Start	Est. Finish	Current Budget
S2024	Campo Road Sewer Main Replacement	07/01/2010	06/01/2017	$5,500,000
S2028	Explorer Way 8-inch Sewer Main Replacement	07/01/2011	09/01/2016	$125,000
S2033	Sewer System Various Locations Rehabilitation	07/01/2011	09/01/2015	$800,000
S2040	Calavo Sewer Basin Improvements	07/01/2012	09/01/2014	$1,250,000
S2041	Rancho San Diego Sewer Basin Improvements	07/01/2012	09/01/2016	$1,750,000

Table 3-2 summarizes wastewater collection system improvement recommendations identified in the 2012 WWMP and the capital cost opinions for these projects. In some cases the projects have already been incorporated into the current OWD CIP Budget. For example, CIP #3 corresponds to S2024 in Table 3-1. The remaining recommended projects (CIP #1, 2, 4) are in the Rancho San Diego basin and will be considered with the improvements under CIP project S2041. The estimated total capital cost for the recommended infrastructure to correct existing system deficiencies is $8.53 million. To accommodate 2030 wastewater flows, the additional capital cost is approximately $2.72 million.

Table 3-2. Recommended Wastewater Collection System Improvements – 2012 WWMP

Project No.	Description		Location	Unit Cost ($/LF)	Conceptual Cost Opinion ($)	
					Existing	2030
Collection System Pipes						
CIP #1	12-inch	36 LF	Near Fury Lane and Jamacha Road	1,020	$37,000	--
CIP #2	24-inch	91 LF	Near Hillsdale Road and Jamacha Road	2,040	$190,000	--
CIP #3	15-inch	9,225 LF	Along Campo Road from Avocado Road to Singer Lane	900	$8,300,000	--
CIP #4	15-inch	900 LF	Near Jamacha Road and Donahue Drive	1,275	--	$1,150,000
CIP #5	15-inch	1,235 LF	Along Ivanhoe Ranch Road upstream of Cottonwood Pump Station	1,275	--	$1,570,000
Total					**$8,527,000**	**$2,720,000**

Overall Collection and Wastewater Treatment System Project Alternatives

The WWMP also identifies several alternatives for the overall system of wastewater collection and treatment within the OWD. Each alternative has different project features and components and give the OWD the most flexibility in choosing the best alternative that fulfills their wastewater strategies and meets projected future demand.

Alternative 1 -No Project Alternative

The no project alternative is the same as that presented in the 2010 PEIR and as such is incorporated by reference. This alternative represents the baseline conditions and is analyzed via the comparison to the other alternatives listed below.

Alternative 2 – Eliminate Wastewater Treatment within District

Under this alternative, the District would abandon the current wastewater treatment operations at the Ralph W. Chapman Water Recycling Facility (RWCWRF) and all wastewater flows collected by the District would be conveyed to the City of San Diego (SD) Metropolitan Wastewater System. Other components associated with this alternative include, decommissioning the RWCWRF; implementing the required Rancho San Diego Pump Station (PS) improvements; maintaining and improving the wastewater collection system based on hydraulic modeling.

Treatment options for wastewater flows being conveyed to the City of SD Metropolitan Wastewater System could be to either maintain current primary treatment or implement secondary treatment. Recycled water supply options under this alternative include receiving reclaimed water from the SBWRP and/or a proposed City of Chula Vista water reclamation facility.

Alternative 3 – Recycle All Wastewater Flows within District

Under this alternative, the District would continue collecting and treating wastewater at the RWCWRF under the current capacity of 1.3 MGD or operations could potentially be expanded to approximately 2.6 MGD. Excess flows beyond the RWCWRF's capacity would be conveyed to the City of SD Metropolitan Wastewater System. Other components associated with this alternative include implementing the required Rancho San Diego PS improvements and maintaining and improving the wastewater collection system based on hydraulic modeling.

Options for solid waste disposal would include continuing current practices of conveyance to the Metropolitan Wastewater System or handling/treating solid waste onsite and disposing residuals in landfill. Treatment options for wastewater flows being conveyed to the City of SD Metropolitan Wastewater System could be to either maintain current primary treatment or implement secondary treatment. Recycled water supply options under this alternative include receiving reclaimed water from the RWCWRF, the SBWRP and/or a proposed City of Chula Vista water reclamation facility.

Alternative 4 – Recycle All Wastewater Flows within District and Expand To Accept Wastewater From Other Service Areas

Under this alternative, the District would continue collecting and treating wastewater at the RWCWRF under an increased capacity of up to approximately 3.9 MGD. Under this scenario, the District would be able to treat all wastewater from the Jamacha Basin and any other service areas that needed wastewater

treatment. Excess flows beyond the RWCWRF's capacity (if any) would be conveyed to the City of SD Metropolitan Wastewater System. Other components associated with this alternative include implementing the required Rancho San Diego PS improvements and maintaining and improving the wastewater collection system based on hydraulic modeling.

Options for solid waste disposal would include continuing current practices of conveyance to the Metropolitan Wastewater System or handling/treating solid waste onsite and disposing residuals in landfill. Treatment options for wastewater flows being conveyed to the City of SD Metropolitan Wastewater System could be to either maintain current primary treatment or implement secondary treatment. Recycled water supply options under this alternative include receiving reclaimed water from the RWCWRF, the SBWRP and/or a proposed City of Chula Vista water reclamation facility.

3.3 Project Purpose and Objectives

The purpose of the Otay Water District (OWD) Wastewater Management Plan (WWMP) is to supplement the 2009 Water Resources Management Plan Update (WRMP). It identifies and evaluates current wastewater facilities (e.g., wastewater collection pipelines, pumping stations and a treatment plant), and designs feasible wastewater management strategies that allow the OWD to meet projected future wastewater needs within the OWD planning area and adjacent areas of influence. Additionally, the OWD WWMP develops a phased and systematic approach to implement the wastewater management strategies during future time frames. The OWD WWMP would ensure a wastewater system adequate for projected growth within the OWD planning area and adjacent areas of influence, consistent with the San Diego Association of Governments (SANDAG) forecasts through 2030.

The WWMP will identify a comprehensive system-wide plan for a wastewater system within the OWD planning area and the identified area of influence. The OWD's primary objectives for the WWMP include the following actions:

- Update Planning Criteria: Update the land use database model from the 2010 WRMP using San Diego County land use updates and 2010 SANDAG land use projections. Project the wastewater flows within the District's service area and adjacent areas of influence using population (residential and employment) projections and per capita generation factors.

- Update Hydraulic Model: Update the OWD 2006 hydraulic model using data from the County's updated hydraulic model for the Jamacha Basin.

- Evaluate Existing Wastewater Systems: Make recommendations for improvements to correct deficiencies of existing systems, and to meet any demands of the planning area and identified area of influence based upon development patterns, types, location and timing.

- Evaluate Future Wastewater Systems: Using the projected wastewater collection rates for the planning area, determine new wastewater collection system facilities needs to build out and develop a list of capital improvement program projects to meet these needs. Develop strategies for treatment of the collected wastewater flows and their corresponding CIP needs.

- Update CIP: Develop a phased implementation plan for recommended CIP projects for the existing system deficiencies and any new facilities and estimate costs for identified projects.

Figure 3-2

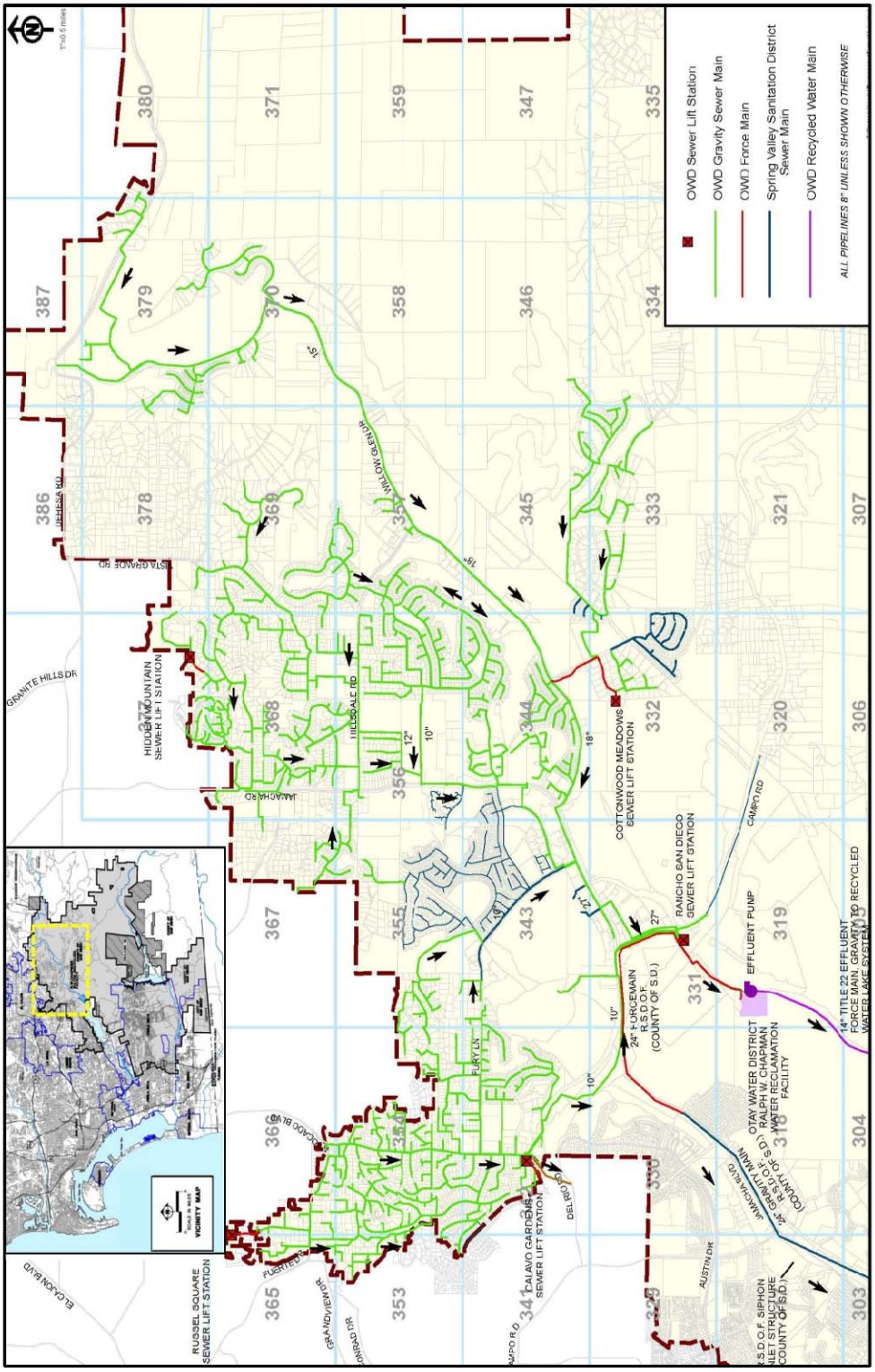

OTAY WATER DISTRICT WASTEWATER SERVICE AREA

3.4 Required Permits and Approvals

The Final SPEIR for the 2012 WRMP Update has been prepared pursuant to CEQA (Public Resources Code [PRC] §§21000 et seq.) and the State of California CEQA Guidelines (California Code of Regulations [CCR] §§15000 et seq.). The Final SPEIR on which these Findings is based evaluates the environmental impacts identified as potentially significant by OWD and its consultants, other agencies, and community members that may result from implementation of the 2012 WRMP Update. The SPEIR process and the information it generates will be used for the following purposes:

- To give government officials and the community the opportunity to have input into the decision-making process;
- To provide agencies with information necessary to determine if they have jurisdiction over some aspect of the proposed action, and, if so, to identify permitting requirements;
- To define a range of reasonable and practicable alternatives to the proposed action;
- To inform the public as well as the decision makers of the environmental consequences of the proposed action and its alternatives;
- To assist the community in understanding the expected project-related environmental effects and how decision-makers plan to respond to and mitigate these effects; and
- To develop mitigation measures that will reduce or eliminate the potential for environmental, public health, and safety impacts.

The Final SPEIR for the 2012 WRMP Update requires certification by OWD's Board of Directors prior to approval of construction contracts. Upon completion of the Final SPEIR, the OWD can choose to: (1) approve the 2012 WRMP Update with conditions and mitigation measures; (2) approve one of the other alternatives with conditions and mitigation measures; or (3) not approve the 2012 WRMP Update or its alternatives.

Numerous federal, State and local regulations and permit requirements would be applicable to the implementation of the 2012 WMMP Update (2009 WRMP Update) (Table 3-3). The OWD, or its contractors, would be required to comply with all applicable requirements, unless by exception of Government Code Section 53091.

Table 3-3. Potential Permits and Approvals

Agency/Department	Permit/Approval	Action Associated With or Required For
Federal Agencies		
USFWS	Biological Assessment, Section 7 Consultation, Biological Opinion (Endangered Species Act [ESA] 16 U.S.C. 1531-1544)	Activity where there may be an effect on federally-listed endangered/threatened/ proposed species (applies to projects with federal involvement).
	Fish and Wildlife Coordination Act	Provide comments to prevent loss of, and damage to, wildlife resources.
ACOE	Individual/Nationwide Section 404 Permit (CWA, 33 USC 1341)	Discharge of dredge/fill into Waters of the U.S., including wetlands.

Agency/Department	Permit/Approval	Action Associated With or Required For
	Section 10, Rivers and Harbors Act Permit	Activities, including the placement of structures, affecting navigable waters.
Advisory Council on Historic Preservation	Section 106 Consultation, National Historic Preservation Act (NHPA)	Opportunity to comment if project may affect cultural resources listed or eligible for listing on National Register of Historic Places (NRHP).
U.S. Department of Transportation (USDOT), Federal Highway Administration (FHA)	Encroachment Permits	Consider issuance of permit for transmission line crossing of federally-funded highways.
U.S. Department of the Treasury, Bureau of Alcohol, Tobacco and Firearms	Explosive User's Permit	Consider issuance of permit to purchase, store and use explosives for site preparation.
State Agencies		
State Water Resources Control Board (SWRCB), Regional Water Quality Control Board (RWQCB)	General Construction Activity Stormwater Permit	Stormwater discharges associated with construction activity.
	Waste Discharge Requirements (Water Code 13000 *et seq.*)	Discharge of waste that might affect groundwater or surface water (nonpoint-source) quality.
	401 Certification (CWA, 33 USC 1341. If the project requires ACOE 404 Permit)	Discharge into waters and wetlands (see ACOE Section 404 Permit).
California State Lands Commission	Right-of-Way Permit (Land Use Lease)	Consider issuance of a grant of right-of-way across State land.
California Department of Fish and Wildlife (CDFW)	California ESA	Activity where a listed candidate, threatened, or endangered species under California ESA may be present in the project area and a State agency is acting as lead agency for CEQA compliance. Consider issuance of a Section 2081 incidental take permit for State-only listed species and a Section 2081.1 consistency determination for effects on species that are both federally and State listed.
California Department of Fish and Wildlife (CDFW)	California Native Plant Protection Act	Review of mitigation agreement and mitigation plan for plants listed as rare.
	Lake/Streambed Alteration Agreement (California Fish and Game Code Section 1601)	Change in natural state of river, stream or lake (includes road or land construction across a natural streambed).
California Department of Transportation (Caltrans)	Encroachment Permit	Consider issuance of permits to cross State highways.
California Coastal Commission (CCC)	Coastal Development Permit	Development within the Coastal Zone.
California State Historic Preservation Office	Section 106 Consultation, NHPA	Consult with Bureau of Land Management (BLM), project applicant, appropriate land management agencies, and others regarding activities potentially affecting cultural resources.
Local Agencies		

Agency/Department	Permit/Approval	Action Associated With or Required For
County of San Diego Department of Environmental Health (DEH)	Hazardous Materials Business Plan	Hazardous material exceeding federal threshold quantities.
	Hazardous Materials Inventory	Hazardous materials exceeding County threshold quantities.
San Diego Country, Sheriff's Department	Explosives Permit	Consider issuance of a license to store flammable explosives.
San Diego Air Pollution Control District (SDAPCD)	Authority to Construct	Emissions from a stationary source.
	Permit to Operate	Equipment emitting pollutants from a stationary source.

CHAPTER 4.0 BACKGROUND

The OWD was authorized as a California Special District by the State Legislature in 1956, under the provisions of the Municipal Water District Law of 1911, and thereby gained its entitlement to imported water. As a member agency of the San Diego County Water Authority (SDCWA), the OWD purchases all potable water that it delivers from the SDCWA. The SDCWA is responsible for transmission of the imported water supply within San Diego County to its member agencies, and is itself a member of the Metropolitan Water District of Southern California.

The existing potable water supply to the OWD comes from the SDCWA through four separate connections to Pipeline No. 4 within the Second Aqueduct route of the SDCWA Flow Control Facility. The OWD also receives treated potable water from the R.M. Levy Water Treatment Plan (WTP), which is operated by the Helix Water District.

The Ralph W. Chapman Water Reclamation Facility (RWCWRF) operated by the OWD and the South Bay Water Reclamation Plant operated by the City of San Diego both supply recycled water for users within the OWD service area. The OWD's wastewater collection system in the North District is the source of the influent wastewater that is treated at the RWCWRF.

In 2002, the OWD developed a comprehensive WRMP that combined all previously existing master plans and facility plans into one system-wide plan outlining the Capital Improvement Program (CIP) projects required to serve their customers. The following three phases were identified in the 2002 WRMP: Phase I (2002-2006), Phase II (2007-2016), and Phase III (2017-2030).

Since 2002, the OWD has continued to improve its potable water facilities to meet the water demands associated with growth. The OWD has also continued to improve and expand its recycled water facilities to serve irrigation demands and conserve potable water supplies. The OWD's wastewater collection system and the RWCWRF have also been improved. The CIP is updated annually to reflect system improvements and to identify future needs for budgeting purposes.

CHAPTER 5.0 RECORD OF PROCEDINGS

For purposes of CEQA and these Findings, the Record of Proceedings for the 2012 WRMP Update consists of the following documents, at a minimum:

- The NOP and all other public notices issued by the OWD in conjunction with the 2012 WRMP Update SPEIR;
- The Draft SPEIR and Final SPEIR, including appendices;
- All comments submitted by agencies, organizations, or members of the public during the 45-day public comment period on the Draft SPEIR;
- The project design features, standard construction practices, and mitigation/performance measures incorporated into the CIP projects to avoid significant environmental impacts;
- All findings and resolutions adopted by the OWD decision makers in connection with the 2012 WRMP Update SPEIR, and all documents cited or referred therein;
- All final reports, studies, memoranda, maps, or other documents relating to the 2012 WRMP Update SPEIR prepared by ARCADIS, consultants to the OWD;
- Minutes and/or verbatim transcripts of all information sessions, public meetings, and public hearings held by the OWD, in connection with the 2012 WRMP Update SPEIR;
- Any documentary or other evidence submitted to the OWD at such information sessions, public meetings, and public hearings;
- Matters of common knowledge to the OWD including, but not limited to, federal, State, and local laws and regulations;
- Any documents expressly cited in these Findings, in addition to those cited above; and
- Any other materials required for the Record of Proceedings by PRC §21167.6(e).

The custodian of the documents comprising the Record of Proceedings is the OWD, whose office is located at 2554 Sweetwater Springs Boulevard, Spring Valley, California 91978-2096.

The OWD has relied on all of the documents listed above in reaching its decision on the 2012 WRMP Update SPEIR, even if every document was not formally presented to the OWD decision makers as part of the OWD files generated in connection with the 2012 WRMP Update SPEIR. Without exception, any document set forth above that is not found in the OWD files falls into one of two categories: (1) many of the documents reflect prior planning or legislative decisions with which the OWD was aware in approving the 2009 WRMP Update PEIR (see *City of Santa Cruz v. Local Agency Formation Commission* (1978) 76 Cal.App.3d 381, 391-392; *Dominey v. Department of Personnel Administration* (1988) 205 Cal.App.3d 729, 738, fn. 6); (2) other documents influenced the expert advice provided to the OWD staff or consultants, who then provided advice to the OWD decision makers. Therefore, such documents form part of the underlying factual basis for OWD's decision relating to approval of the 2012 WRMP Update and certification of the Final SPEIR (see PRC §21167.6(e)(10); *Browning-Ferris Industries v. City Council of City of San Jose* (1986) 181 Cal.App.3d 852, 866; *Stanislaus Audubon Society, Inc. v. County of Stanislaus* (1995) 33 Cal.App.4th 144, 153, 155).

CHAPTER 6.0 FINDINGS REQUIRED UNDER CEQA

PRC §21002 provides that "public agencies should not approve projects as proposed if there are feasible alternatives or feasible mitigation measures available that would *substantially lessen* the significant environmental effects of such projects[...]" (emphasis added). The same statute states that the procedures required by CEQA "are intended to assist public agencies in systematically identifying both the significant effects of proposed projects and the feasible alternatives or feasible mitigation measures that will *avoid* or *substantially lessen* such significant effects" (emphasis added). Section 21002 goes on to state that "in the event [that] specific economic, social, or other conditions make infeasible such project alternatives or such mitigation measures, individual projects may be approved in spite of one or more significant effects."

The mandate and principles announced in PRC §21002 are implemented, in part, through the requirement that agencies must adopt findings before approving projects for which EIRs are required (see PRC §21081(a); State CEQA Guidelines §15091(a)). For each significant environmental effect identified in an EIR for a proposed project, the approving agency must issue a written finding reaching one or more of three permissible conclusions. The first such finding is that "[c]hanges or alterations have been required in, or incorporated into, the project which avoid or substantially lessen the significant environmental effect as identified in the Final EIR" (State CEQA Guidelines §15091(a)(1)). The second permissible finding is that "[s]uch changes or alterations are within the responsibility and jurisdiction of another public agency and not the agency making the finding. Such changes have been adopted by such other agency or can and should be adopted by such other agency" (State CEQA Guidelines §15091(a)(2)). The third potential conclusion is that "[s]pecific economic, legal, social, technological, or other considerations, including provision of employment opportunities for highly trained workers, make infeasible the mitigation measures or project alternatives identified in the Final EIR" (State CEQA Guidelines §15091(a)(3)). PRC §21061.1 defines "feasible" to mean "capable of being accomplished in a successful manner within a reasonable period of time, taking into account economic, environmental, social and technological factors." State CEQA Guidelines §15364 adds another factor: "legal" considerations (see also *Citizens of Goleta Valley v. Board of Supervisors* (1990) 52 Cal.3d 553, 565).

The concept of "feasibility" also encompasses the question of whether a particular alternative or mitigation measure promotes the underlying goals and objectives of a project (*City of Del Mar v. City of San Diego* (1982) 133 Cal.App.3d 410, 417). "[F]easibility" under CEQA encompasses "desirability" to the extent that desirability is based on a reasonable balancing of the relevant economic, environmental, social, and technological factors" (*Ibid*.; see also *Sequoyah Hills Homeowners Assn. v. City of Oakland* (1993) 23 Cal.App.4th 704, 715).

The State CEQA Guidelines do not define the difference between "avoiding" a significant environmental effect and merely "substantially lessening" such an effect. The OWD must, therefore, glean the meaning of these terms from the other contexts in which the terms are used. PRC §21081, on which State CEQA Guidelines §15091 is based, uses the term "mitigate" rather than "substantially lessen." The State CEQA Guidelines therefore equate "mitigating" with "substantially lessening." Such an understanding of the statutory term is consistent with the policies underlying CEQA, which include the policy that "public agencies should not approve projects as proposed if there are feasible alternatives or feasible mitigation measures available that would substantially lessen the significant environmental effects of such projects" (PRC §21002).

For purposes of these Findings, the term "avoid" refers to the effectiveness of one or more mitigation measures to reduce an otherwise significant effect to a less than significant level. In contrast, the term "substantially lessen" refers to the effectiveness of such measure or measures to substantially reduce the severity of a significant effect, but not to reduce that effect to a less than significant level. These interpretations appear to be mandated by the holding in *Laurel Hills Homeowners Association v. City Council* (1978) 83 Cal.App.3d 515, 519-527, in which the Court of Appeal held that an agency had satisfied its obligation to substantially lessen or avoid significant effects by adopting numerous mitigation measures, not all of which rendered the significant impacts in question less than significant.

Although State CEQA Guidelines §15091 requires only that approving agencies specify that a particular significant effect is "avoid[ed] *or* substantially lessen[ed]," these Findings, for purposes of clarity, in each case will specify whether the effect in question has been reduced to a less than significant level or has simply been substantially lessened but remains significant. Moreover, although Section 15091, read literally, does not require findings to address environmental effects that an EIR identifies as merely "potentially significant," these Findings will nevertheless fully account for all such effects identified in the Final PEIR.

In short, CEQA requires that the lead agency adopt mitigation measures or alternatives, where feasible, to substantially lessen or avoid significant environmental impacts that would otherwise occur. Certain project modifications or the adoption of certain mitigation measures or alternatives are not required, however, where such actions are infeasible or where the responsibility for implementation lies with some other agency (State CEQA Guidelines §15091(a), (b)).

State CEQA Guidelines §15126.2(b) requires the identification of significant impacts that would not be avoided, even with the implementation of feasible mitigation measures or a feasible environmentally superior alternative. With respect to a project for which significant impacts are not avoided or substantially lessened, either through the adoption of feasible mitigation measures or a feasible environmentally superior alternative, a public agency, after adopting proper findings, may nevertheless approve the project if the agency first adopts a statement of overriding considerations setting forth the specific reasons why the agency found that the project's "benefits" rendered "acceptable" the "unavoidable adverse environmental effects" (State CEQA Guidelines §§15093, 15043(b); see also PRC §21081(b)). According to the evaluation within the 2012 WRMP Update SPEIR, all potential environmental effects would be reduced to less than significant levels with implementation of identified project design features (PDFs), standard construction practices (SCPs) and feasible mitigation/performance measures, and no significant unavoidable environmental impacts would remain. Therefore, a statement of overriding considerations is not required for the 2012 WRMP Update SPEIR. Please note that the final determination of significance of impacts and of the feasibility of mitigation/performance measures will be made by the OWD Board of Directors as part of their certification of the Final SPEIR.

CHAPTER 7.0 LEGAL EFFECTS OF FINDINGS

To the extent that these Findings conclude that various project design features, standard construction practices and mitigation/performance measures outlined in the Final SPEIR are feasible and have not been modified, superseded, or withdrawn, the OWD hereby binds itself to implement these measures. These Findings, in other words, are not merely informational, but rather constitute a binding set of obligations that will come into effect when the OWD formally approves the 2012 WRMP Update and certifies the Final SPEIR.

The project design features, standard construction practices and mitigation/performance measures are included in the Mitigation Monitoring and Reporting Program (MMRP) adopted concurrently with these Findings, and will be effectuated through the process of implementing the 2012 WRMP Update (refer to Section 8.0 of these Findings).

CHAPTER 8.0 MITIGATION MONITORING AND REPORTING PROGRAM

A MMRP has been prepared for the 2012 WRMP Update SPEIR, and has been adopted concurrently with these Findings (see PRC §21081.6(a)(1)), that includes the project design features, standard construction practices and mitigation/performance measures incorporated into the 2012 WRMP Update CIP projects to avoid or substantially lessen significant environmental effects, as outlined in the Final SPEIR. The OWD will use the MMRP, which is a separate, stand-alone document, to track compliance with the adopted project design features, standard construction practices and mitigation/performance measures. The MMRP will remain available for public review during the compliance period.

CHAPTER 9.0 SIGNIFICANT EFFECTS AND MITIGATION MEASURES

9.1 Air Quality and Global Climate Change

Thresholds of Significance

The thresholds of significance used to evaluate potential impacts on air quality and global climate change are the same as those used in the 2009 WRMP Update PEIR and are hereby incorporated by reference (Otay 2010).

Impacts

The impacts under each threshold are unchanged from the 2009 WRMP Update PEIR and are hereby incorporated by reference (Otay 2010).

Findings

The projects evaluated under the SPEIR would not change the conclusions of the 2009 WRMP Update PEIR (Otay 2010) in regards to air quality and global climate change.

Mitigation / Performance Measures

Implementation of the mitigation/performance measures, PDF's and SCP's for air quality and global climate change, listed in the 2009 WRMP PEIR (Otay 2010) and referenced in the 2013 SPEIR would reduce all impacts to a less than significant level.

Residual Impacts after Mitigation

No residual impacts would remain after implementation of the PDF's, SCP's and mitigation/performance measures listed in the 2009 WRMP PEIR (Otay 2010) and referenced in the 2013 SPEIR.

9.2 Biological Resources

Thresholds of Significance

The thresholds of significance used to evaluate potential impacts on biological resources are the same as those used in the 2009 WRMP Update PEIR and are hereby incorporated by reference (Otay 2010).

Impacts

The impacts under each threshold are unchanged from the 2009 WRMP Update PEIR and are hereby incorporated by reference (Otay 2010).

Findings

The projects evaluated under the SPEIR would not change the conclusions of the 2009 WRMP Update PEIR (Otay 2010) in regards to biological resources.

Mitigation / Performance Measures

Implementation of the mitigation/performance measures, PDF's and SCP's for biological resources, listed in the 2009 WRMP PEIR (Otay 2010) and referenced in the 2013 SPEIR would reduce all impacts to a less than significant level.

Residual Impacts after Mitigation

No residual impacts would remain after implementation of the PDF's, SCP's and mitigation/performance measures listed in the 2009 WRMP PEIR (Otay 2010) and referenced in the 2013 SPEIR.

9.3 Cultural Resources

Thresholds of Significance

The thresholds of significance used to evaluate potential impacts on cultural resources are the same as those used in the 2009 WRMP Update PEIR and are hereby incorporated by reference (Otay 2010).

Impacts

The impacts under each threshold are unchanged from the 2009 WRMP Update PEIR and are hereby incorporated by reference (Otay 2010).

Findings

The projects evaluated under the SPEIR would not change the conclusions of the 2009 WRMP Update PEIR (Otay 2010) in regards to cultural resources.

Mitigation / Performance Measures

Implementation of the mitigation/performance measures, PDF's and SCP's for cultural resources, listed in the 2009 WRMP PEIR (Otay 2010) and referenced in the 2013 SPEIR would reduce all impacts to a less than significant level.

Residual Impacts after Mitigation

No residual impacts would remain after implementation of the PDF's, SCP's and mitigation/performance measures listed in the 2009 WRMP PEIR (Otay 2010) and referenced in the 2013 SPEIR.

9.4 Energy

Thresholds of Significance

The thresholds of significance used to evaluate potential impacts on energy are the same as those used in the 2009 WRMP Update PEIR and are hereby incorporated by reference (Otay 2010).

Impacts

The impacts under each threshold are unchanged from the 2009 WRMP Update PEIR and are hereby incorporated by reference (Otay 2010).

Findings

The projects evaluated under the SPEIR would not change the conclusions of the 2009 WRMP Update PEIR (Otay 2010) in regards to energy.

Mitigation / Performance Measures

Implementation of the mitigation/performance measures, PDF's and SCP's for energy, listed in the 2009 WRMP PEIR (Otay 2010) and referenced in the 2013 SPEIR would reduce all impacts to a less than significant level.

Residual Impacts after Mitigation

No residual impacts would remain after implementation of the PDF's, SCP's and mitigation/performance measures listed in the 2009 WRMP PEIR (Otay 2010) and referenced in the 2013 SPEIR.

9.5 Geology, Soils, and Paleontology

Thresholds of Significance

The thresholds of significance used to evaluate potential impacts on geology, soils, and paleontology are the same as those used in the 2009 WRMP Update PEIR and are hereby incorporated by reference (Otay 2010).

Impacts

The impacts under each threshold are unchanged from the 2009 WRMP Update PEIR and are hereby incorporated by reference (Otay 2010).

Findings

The projects evaluated under the SPEIR would not change the conclusions of the 2009 WRMP Update PEIR (Otay 2010) in regards to geology, soils, and paleontology.

Mitigation / Performance Measures

Implementation of the mitigation/performance measures, PDF's and SCP's for geology, soils, and paleontology, listed in the 2009 WRMP PEIR (Otay 2010) and referenced in the 2013 SPEIR would reduce all impacts to a less than significant level.

Residual Impacts after Mitigation

No residual impacts would remain after implementation of the PDF's, SCP's and mitigation/performance measures listed in the 2009 WRMP PEIR (Otay 2010) and referenced in the 2013 SPEIR.

9.6 Hydrology and Water Quality

Thresholds of Significance

The thresholds of significance used to evaluate potential impacts on hydrology and water quality are the same as those used in the 2009 WRMP Update PEIR and are hereby incorporated by reference (Otay 2010).

Impacts

The impacts under each threshold are unchanged from the 2009 WRMP Update PEIR and are hereby incorporated by reference (Otay 2010).

Findings

The projects evaluated under the SPEIR would not change the conclusions of the 2009 WRMP Update PEIR (Otay 2010) in regards to hydrology and water quality.

Mitigation / Performance Measures

Implementation of the mitigation/performance measures, PDF's and SCP's for hydrology and water quality, listed in the 2009 WRMP PEIR (Otay 2010) and referenced in the 2013 SPEIR would reduce all impacts to a less than significant level.

Residual Impacts after Mitigation

No residual impacts would remain after implementation of the PDF's, SCP's and mitigation/performance measures listed in the 2009 WRMP PEIR (Otay 2010) and referenced in the 2013 SPEIR.

9.7 Landform Alteration and Visual Aesthetics

Thresholds of Significance

The thresholds of significance used to evaluate potential impacts on landform alteration and visual aesthetics are the same as those used in the 2009 WRMP Update PEIR and are hereby incorporated by reference (Otay 2010).

Impacts

The impacts under each threshold are unchanged from the 2009 WRMP Update PEIR and are hereby incorporated by reference (Otay 2010).

Findings

The projects evaluated under the SPEIR would not change the conclusions of the 2009 WRMP Update PEIR (Otay 2010) in regards to landform alteration and visual aesthetics.

Mitigation / Performance Measures

Implementation of the mitigation/performance measures, PDF's and SCP's for landform alteration and visual aesthetics, listed in the 2009 WRMP PEIR (Otay 2010) and referenced in the 2013 SPEIR would reduce all impacts to a less than significant level.

Residual Impacts after Mitigation

No residual impacts would remain after implementation of the PDF's, SCP's and mitigation/performance measures listed in the 2009 WRMP PEIR (Otay 2010) and referenced in the 2013 SPEIR.

9.8 Land Use and Planning

Thresholds of Significance

The thresholds of significance used to evaluate potential impacts on land use and planning are the same as those used in the 2009 WRMP Update PEIR and are hereby incorporated by reference (Otay 2010).

Impacts

The impacts under each threshold are unchanged from the 2009 WRMP Update PEIR and are hereby incorporated by reference (Otay 2010).

Findings

The projects evaluated under the SPEIR would not change the conclusions of the 2009 WRMP Update PEIR (Otay 2010) in regards to land use and planning.

Mitigation / Performance Measures

Implementation of the mitigation/performance measures, PDF's and SCP's for land use and planning, listed in the 2009 WRMP PEIR (Otay 2010) and referenced in the 2013 SPEIR would reduce all impacts to a less than significant level.

Residual Impacts after Mitigation

No residual impacts would remain after implementation of the PDF's, SCP's and mitigation/performance measures listed in the 2009 WRMP PEIR (Otay 2010) and referenced in the 2013 SPEIR.

9.9 Noise

Thresholds of Significance

The thresholds of significance used to evaluate potential impacts on noise are the same as those used in the 2009 WRMP Update PEIR and are hereby incorporated by reference (Otay 2010).

Impacts

The impacts under each threshold are unchanged from the 2009 WRMP Update PEIR and are hereby incorporated by reference (Otay 2010).

Findings

The projects evaluated under the SPEIR would not change the conclusions of the 2009 WRMP Update PEIR (Otay 2010) in regards to noise.

Mitigation / Performance Measures

Implementation of the mitigation/performance measures, PDF's and SCP's for noise, listed in the 2009 WRMP PEIR (Otay 2010) and referenced in the 2013 SPEIR would reduce all impacts to a less than significant level.

Residual Impacts after Mitigation

No residual impacts would remain after implementation of the PDF's, SCP's and mitigation/performance measures listed in the 2009 WRMP PEIR (Otay 2010) and referenced in the 2013 SPEIR.

9.10 Public Safety

Thresholds of Significance

The thresholds of significance used to evaluate potential impacts on public safety are the same as those used in the 2009 WRMP Update PEIR and are hereby incorporated by reference (Otay 2010).

Impacts

The impacts under each threshold are unchanged from the 2009 WRMP Update PEIR and are hereby incorporated by reference (Otay 2010).

Findings

The projects evaluated under the SPEIR would not change the conclusions of the 2009 WRMP Update PEIR (Otay 2010) in regards to public safety.

Mitigation / Performance Measures

Implementation of the mitigation/performance measures, PDF's and SCP's for public safety, listed in the 2009 WRMP PEIR (Otay 2010) and referenced in the 2013 SPEIR would reduce all impacts to a less than significant level.

Residual Impacts after Mitigation

No residual impacts would remain after implementation of the PDF's, SCP's and mitigation/performance measures listed in the 2009 WRMP PEIR (Otay 2010) and referenced in the 2013 SPEIR.

9.11 Growth Inducement

As required by CEQA Guidelines Section 15126.2(d), an EIR must include a discussion of the ways in which a proposed project could directly or indirectly foster economic development or population growth, and how that growth would affect the surrounding environment. Growth can be induced in a number of ways, including the elimination of obstacles to growth, or through the stimulation of economic activity within the region. The discussion of the "removal of obstacles to growth" relates directly to the removal of infrastructure limitations or regulatory constraints that could result in growth unforeseen at the time of project approval. According to CEQA Guidelines Section 15126.2(d), "it must not be assumed that growth in any area is necessarily beneficial, detrimental, or of little significance to the environment." The CEQA Guidelines require a discussion of growth inducement, but not speculation as to when, where and what form growth may occur, as such speculation does not provide the reader with accurate or useful information about the project's potential effects.

Future growth rates and associated wastewater treatment demands within the planning area were estimated within the 2012 WRMP Update to identify the CIP projects that would be needed to serve OWD customers. As discussed in Chapter 4.0 (Cumulative Impacts and Mitigation) of the SPEIR, data on future growth were obtained from SANDAG, the City of Chula Vista, and recent forecasts developed by the OWD. The following sections discuss these data sources, the growth rates estimated for the planning area, and how this data relates to direct and indirect growth inducement with regards to implementation of the 2012 WRMP Update WWMP.

San Diego Association of Governments

SANDAG is a regional planning agency comprised of 18 representatives from city and county governments within the San Diego area. SANDAG is the regional authority for the creation of planning, transportation, and growth forecast documents. The growth projections in the 2012 WRMP Update are based partly on SANDAG's 2004 Regional Comprehensive Plan (RCP). The RCP provides growth projections based on land use data provided by local jurisdictions, and also provides a regional framework to help guide growth and development throughout San Diego. As such, the planning horizon for both the RCP and the 2012 WRMP Update is the year 2030.

With the exception of the portion of the planning area within the City of Chula Vista, the 2012 WRMP Update utilized land use data from SANDAG as a basis for estimating and predicting future land use types and associated water consumption. As various land uses have different water requirements, these land use estimations were used to predict and size capacities for CIP projects under the 2012 WRMP Update.

City of Chula Vista

The southern portion of the planning area is within the jurisdiction of the City of Chula Vista. Between the time frame of the 2002 WRMP and the present 2012 WRMP Update, Chula Vista has grown by nearly 11,500 new residential units (PBS&J 2008). As such, future capacity and water consumption requirements within the portion of the planning area encompassed by Chula Vista were estimated by utilizing residential growth forecasts for the years 2008 through 2012 (City of Chula Vista 2007).

OWD Forecasts

Estimated future capacity needs within the planning area were also calculated by utilizing the OWD's known water consumption data from water meters. This data was applied to land use predictions from SANDAG, the City of Chula Vista, and the County of San Diego to estimate future recycled water and sewer demand within undeveloped portions of the planning area.

Direct and Indirect Growth-Inducing Effects

Implementation of the 2012 WRMP Update would not directly create or induce growth within the planning area because the OWD has no land use authority and cannot approve land development. As stated above, indirect growth may result from the removal of physical impediments or restrictions to growth, as well as the removal of planning impediments resulting from land use plans and policies. In this context, physical growth impediments may include nonexistent or inadequate access to an area or the lack of essential public services (e.g., sewer service), while planning impediments may include restrictive zoning and/or general plan designations.

Many of the CIP projects under the 2012 WRMP Update would be constructed at sites that contain existing OWD facilities; therefore, these projects would not result in indirect growth effects. The construction of new CIP facilities within undeveloped areas would be phased commensurate with planned growth; therefore, these projects would also not result in indirect growth effects because the timing of implementation is intended to serve the recycled water and wastewater needs of specified planned developments as they are approved. In other words, none of the CIP projects under the 2012 WRMP Update would be developed in anticipation of unforeseen or unplanned future growth. Therefore, implementation of the 2012 WRMP Update would not be growth-inducing because it would not remove an impediment to growth.

Furthermore, construction of CIP projects under the 2012 WRMP Update would generate new jobs throughout the planning area, but this additional economic activity would be incremental compared to the economic growth of the greater San Diego region. Therefore, implementation of the 2012 WRMP Update would not be growth-inducing because it would not foster substantial economic expansion or growth in the region.

9.12 CEQA Checklist Items Not Applicable to the 2012 WRMP Update

The following five topics were not analyzed in Chapter 4.0 of the SPEIR because they are not applicable to the 2012 WRMP Update: population and housing, public services, recreation, and utilities and service systems. Additionally, two issues regarding transportation and traffic were found to be not applicable to the 2012 WRMP Update. The rationales for these findings are explained below.

Population and Housing

Implementation of the 2012 WRMP Update would not displace substantial numbers of existing housing or people, otherwise necessitating the construction of replacement housing elsewhere. Therefore, there would be no impact to housing, and no further analysis is required. The potential for the 2012 WRMP Update to induce substantial population growth, either directly or indirectly is discussed in Section 9.11 of these Findings.

Public Services

Implementation of the 2012 WRMP Update would not result in impacts associated with maintaining acceptable service ratios, response times or other performance objectives for fire protection services, police protection services, schools, parks, or any other public facilities. As such, implementation of the 2012 WRMP Update would not require provision of new or physically altered fire protection, police protection, school, and park facilities, the construction of which could cause significant environmental impacts. Therefore, there would be no impact to public services, and no further analysis is required.

Recreation

Implementation of the 2012 WRMP Update would not impact the use of parks or other recreational facilities, such that substantial physical deterioration of the facility would occur or be accelerated, nor would it include require the construction or expansion of recreational facilities which may have an adverse physical effect on the environment. Therefore, there would be no impact to recreational facilities, and no further analysis is required.

Transportation and Traffic

Implementation of the 2012 WRMP Update would not change air traffic volumes that would result in substantial safety risks. Additionally, implementation of the 2012 WRMP Update would not involve any roadway or intersection improvements that could substantially increase hazards due to a design feature (e.g., sharp curves or dangerous intersections). Therefore, there would be no impact to air traffic patterns or no traffic safety hazards, and no further analysis is required.

Utilities and Service Systems

As stated in Section 3.4.1 (Purpose, Project Description) of the SPEIR, the primary purpose of the 2012 WMMP is to supplement the 2012 WRMP Update, identify and evaluate current wastewater facilities, design feasible wastewater management strategies that allow the OWD to meet projected future wastewater needs within the OWD planning areas of influence, and to develop a phased and systematic approach to implement wastewater management strategies consistent with SANDAG forecasts, through

2030. In addition, another primary purpose of the 2012 WMMP is to ensure an adequate, reliable, flexible, and cost effective wastewater collection and treatment commensurate with growth within the planning area and adjacent areas of influence, consistent with SANDAG forecasts, through 2030. As discussed in Section 4.10 (Public Safety) of the SPEIR, all demolition debris and construction waste associated with construction of CIP projects under the 2012 WRMP Update would be properly handled and disposed of, in accordance with federal, State and local statutes and regulations related to solid waste. Moreover, the long-term operations of CIP projects under the 2012 WRMP Update would not generate solid waste that would impact the permitted capacity of area landfills.

CHAPTER 10.0 PROJECT ALTERNATIVES

Where a lead agency has determined that, even with the adoption of all feasible mitigation measures, a proposed project would still cause one or more significant environmental impacts that cannot be substantially lessened or avoided, the agency, prior to approving the project as mitigated, must first determine whether, with respect to such impacts, there remain any project alternatives that are both environmentally superior and feasible within the meaning of CEQA. An alternative may be "infeasible" if it fails to fully promote the lead agency's underlying goals and objectives with respect to the project. Thus, "'feasibility' under CEQA encompasses 'desirability' to the extent that desirability is based on a reasonable balancing of the relevant economic, environmental, social, and technological factors" of a project (*City of Del Mar, supra*, 133 Cal.App.3rd at p. 417; see also *Sequoyah Hills, supra*, 23 CalApp.4th at p. 715).

Thus, OWD can fully satisfy its CEQA obligations by determining whether any alternatives identified in the Final SPEIR are both feasible and environmentally superior with respect to the significant impacts of the 2012 WRMP Update (*Laurel Hills, supra*, 83 Cal.App.3d at pp. 519-527; *Kings County Farm Bureau v. City of Hanford* (1990) 221 Cal.App.3d 692, 730-731; *Laurel Heights Improvement Association v. Regents of the University of California* (1988) 47 Cal.3d 376, 400-403).

This section presents an evaluation of four alternatives to the proposed 2012 WRMP Update: No Project Alternative (Alternative 1), Eliminate Wastewater Treatment Within District (Alternative 2), Recycle All Wastewater Flows Within District (Alternative 3), and Recycle All Wastewater Flows Within District And Expanding To Accept Wastewater From Other Service Areas (Alternative 4). For all four alternatives, a brief description is included, followed by a summary impact analysis relative to the 2012 WRMP Update, and an assessment of the degree to which the alternative would meet the goals and objectives of the 2012 WRMP Update. The alternatives addressed in the Final SPEIR are summarized below.

10.1 No Project Alternative

Section 15126.6(e) of the State CEQA Guidelines requires the No Project Alternative to be addressed in an EIR. Under this alternative, the OWD Board of Directors would not adopt the 2012 WRMP Update.

Impact Analysis

Alternative 1 would not necessarily prevent the implementation of the CIP projects listed in the 2012 WRMP Update. Without the 2012 WRMP Update, these projects could still be constructed on an individual basis. The potential environmental impacts associated with implementation of the CIP projects identified in this SPEIR would still occur. These impacts would be reduced to less than significant levels with implementation of the various PDFs, SCPs, and mitigation/performance measures identified in this SPEIR.

Ability to Accomplish Project Objectives

Alternative 1 would not meet any of the objectives identified for the 2012 WRMP Update. Under this alternative, OWD would not be able to fulfill State, regional, and local polices which mandate the

development of alternative water sources. This would hinder OWD's ability to meet the future wastewater demands of the planning area. In addition, this alternative would deny OWD the opportunity to streamline the environmental review of future projects with this SPEIR and subsequent tiered CEQA documents.

10.2 Eliminate Wastewater Treatment Within District

Alternative 2 would eliminate the capacity for OWD to treat wastewater, passing all wastewater to neighboring communities.

Under Alternative 2, the District would abandon the current wastewater treatment operations at the RWCWRF and all wastewater flows collected by the District would be conveyed to the City of SD Metropolitan Wastewater System. Other components associated with this alternative include, decommissioning the RWCWRF; implementing the required Rancho San Diego PS improvements; maintaining and improving the wastewater collection system based on hydraulic modeling.

Treatment options for wastewater flows being conveyed to the City of SD Metropolitan Wastewater System could be to either maintain current primary treatment or implement secondary treatment. Recycled water supply options under this alternative include receiving reclaimed water from the SBWRP and/or the proposed City of Chula Vista reclamation facility.

Impact Analysis

Alternative 2 may result in incrementally reduced impacts to biological resources, in comparison to the proposed CIP projects. However, biological impacts in undeveloped areas could still occur due to the decommissioning and demolition activities associated with the action. Temporary impacts to air quality may incrementally decrease with this alternative, as it may take less time to demolish facilities. Impacts to cultural resources may also be reduced. In general, Alternative 2 may result in less environmental impacts in comparison to the proposed CIP projects, but increases cumulative impacts in surrounding communities.

Ability to Accomplish Project Objectives

Alterative 2 would not meet the objectives identified for the 2012 WRMP Update. The CIP projects listed in the 2012 WRMP Update are designed to meet the w a s t e water management demands of the planning area and identified area of influence based upon development patterns, types, location and timing. This could result in increased impacts to air quality, cultural resources, energy consumption, landform alteration, water quality, and noise.

10.3 Recycle All Wastewater Flows Within District

Alternative 3 would continue collecting and treating wastewater at the RWCWRF under the current capacity of 1.3 MGD or operations could potentially be expanded to approximately 2.6 MGD. Excess flows beyond the RWCWRF's capacity would be conveyed to the City of SD Metropolitan Wastewater System. Other components associated with this alternative include implementing the required Rancho San Diego PS improvements and maintaining and improving the wastewater collection system based on hydraulic modeling.

Options for solid waste disposal would include continuing current practices of conveyance to the Metropolitan Wastewater System or handling/treating solid waste onsite and disposing residuals in

landfill. Treatment options for wastewater flows being conveyed to the City of SD Metropolitan Wastewater System could be to either maintain current primary treatment or implement secondary treatment. Recycled water supply options under this alternative include receiving reclaimed water from the RWCWRF, the SBWRP and/or the proposed City of Chula Vista reclamation facility.

Impact Analysis

Alternative 3 may result in no reduced impacts to any environmental resource in comparison to the proposed CIP projects. In general, Alternative 3 may result in more environmental impacts in comparison to the proposed CIP projects, but decreases cumulative impacts in surrounding communities.

Ability to Accomplish Project Objectives

Alterative 3 would meet some of the objectives identified for the 2012 WRMP Update. Under this alternative, OWD would be able to fulfill State, regional, and local polices which mandate the development of alternative water sources. This would enhance OWD's ability to meet the future wastewater demands of the planning area. The CIP projects listed in the 2012 WRMP Update are designed to meet the wastewater management demands of the planning area and identified area of influence based upon development patterns, types, location and timing..

10.4 Recycle All Wastewater Flows Within District and Expanding To Accept Wastewater From Other Service Areas

Alternative 4 would continue collecting and treating wastewater at the RWCWRF under an increased capacity of up to approximately 3.9 MGD. Under this scenario, the District would be able to treat all wastewater from the Jamacha Basin and any other service areas that needed wastewater treatment. Excess flows beyond the RWCWRF's capacity (if any) would be conveyed to the City of SD Metropolitan Wastewater System. Other components associated with this alternative include implementing the required Rancho San Diego PS improvements and maintaining and improving the wastewater collection system based on hydraulic modeling.

Options for solid waste disposal would include continuing current practices of conveyance to the Metropolitan Wastewater System or handling/treating solid waste onsite and disposing residuals in landfill. Treatment options for wastewater flows being conveyed to the City of SD Metropolitan Wastewater System could be to either maintain current primary treatment or implement secondary treatment. Recycled water supply options under this alternative include receiving reclaimed water from the RWCWRF, the SBWRP and/or the proposed City of Chula Vista reclamation facility.

Impact Analysis

Alternative 4 may result in no reduced impacts to any environmental resource in comparison to the proposed CIP projects. In general, Alternative 4 may result in more environmental impacts in comparison to the proposed CIP projects, but decreases cumulative impacts in surrounding communities.

Ability to Accomplish Project Objectives

Alterative 4 would meet some of the objectives identified for the 2012 WRMP Update. Under this alternative, OWD would be able to fulfill State, regional, and local polices which mandate the development of alternative water sources. This would enhance OWD's ability to meet the future

wastewater demands of the planning area. The CIP projects listed in the 2012 WRMP Update are designed to meet the wastewater management demands of the planning area and identified area of influence based upon development patterns, types, location and timing.

10.5 Environmentally Superior Alternative

CEQA Guidelines Section 15126.6(e) (2) requires that an EIR identify the environmentally superior alternative from among the range of reasonable alternatives that are evaluated. Alternative 1 (No Project Alternative) would avoid all potentially significant environmental impacts identified for the 2012 WRMP Update. However, Alternative 1 would not preclude implementation of some, if not all, of the CIP projects on an individual basis. In addition, this alternative would not meet any of the objectives of the 2012 WRMP Update.

CEQA Guidelines Section 15126.6(e) (2) also requires that an EIR identify another alternative as environmentally superior, besides Alternative 1 (No Project Alternative). In this case, the next environmentally superior alternative would be Alternative 2 (Eliminate Wastewater Treatment Within District), which would reduce, but not eliminate, potential impacts to air quality, biological, and cultural resources. As this is a long range planning document a preferred alternative will not be determined in this document.

ATTACHMENT E

Imagine the result

Wastewater Management Plan
Draft Supplemental PEIR

DRAFT

April 2013

TABLE OF CONTENTS

CHAPTER 1.0 INTRODUCTION 1-1
1.1 Project Background 1-1
1.2 Intended Use and Purpose of the Supplemental Program Environmental Impact Report (SPEIR) 1-1
1.3 CEQA Requirements 1-3
1.3.1 Notice of Preparation/Scoping Process 1-3
1.3.2 SPEIR Public Review 1-4
1.3.3 Organization of the SPEIR 1-5
1.3.4 Other Related Environmental Documents 1-6

CHAPTER 2.0 ENVIRONMENTAL SETTING 2-1
2.1 Regional Setting 2-1
2.2 Local Setting 2-1
2.2.1 HILLSDALE SYSTEM 2-1

CHAPTER 3.0 PROJECT DESCRIPTION 3-1
3.1 Introduction 3-1
3.2 Program Location 3-1
3.3 Background 3-3
3.4 Wastewater Management Plan 3-3
3.4.1 Purpose 3-3
3.4.2 Goals and Objectives 3-5
3.4.3 Facilities Overview 3-5
3.4.4 Description of Projects 3-6
3.4.5 Phasing 3-8
3.4.6 Permits, Approvals, and Regulatory Requirements 3-8

CHAPTER 4.0 SCOPE AND FORMAT OF ENVIRONMENTAL IMPACT ANALYSIS 4-1
4.1 Air Quality and Global Climate Change 4-4
4.1.1 Environmental Setting 4-4
4.1.2 Regulatory Framework 4-4
4.1.3 Project Impacts and Mitigation 4-5
4.1.4 Cumulative Impacts and Mitigation 4-6
4.1.5 CEQQ Checklist Items Deemed Not Significant or Not Applicable to the 2012 WRMP Update 4-7
4.2 Biological Resources 4-8
4.2.1 Environmental Setting 4-8
4.2.2 Regulatory Framework 4-8
4.2.3 Impacts and Mitigation 4-9

4.2.4 Cumulative Impacts and Mitigation 4-9
4.2.5 CEQA Checklist Items Deemed Not Significant or Not Applicable to the 2012 WRMP Update 4-10
4.3 Cultural Resources 4-11
4.3.1 Environmental Setting 4-11
4.3.2 Regulatory Framework 4-11
4.3.3 Impacts and Mitigation 4-11
4.3.4 Cumulative Impacts and Mitigation 4-13
4.3.5 CEQA Checklist Items Deemed Not Significant or Not Applicable to the 2012 WRMP Update 4-13
4.4 Energy 4-14
4.4.1 Environmental Setting 4-14
4.4.2 Regulatory Framework 4-14
4.4.3 Impacts and Mitigation 4-14
4.4.4 Cumulative Impacts and Mitigation 4-15
4.4.5 CEQA Checklist Items Deemed Not Significant or Not Applicable to the 2012 WRMP Update 4-15
4.5 Geology, Soils, and Paleontology 4-16
4.5.1 Environmental Setting 4-16
4.5.2 Regulatory Framework 4-16
4.5.3 Impacts and Mitigation 4-17
4.5.4 Cumulative Impacts and Mitigation 4-19
4.5.5 CEQA Checklist Items Deemed Not Significant or Not Applicable to the 2012 WRMP Update 4-20
4.6 Hydrology and Water Quality 4-21
4.6.1 Environmental Setting 4-21
4.6.2 Regulatory Framework 4-21
4.6.3 Impacts and Mitigation 4-22
4.6.4 Cumulative Impacts and Mitigation 4-24
4.6.5 CEQA Checklist Items Deemed Not Significant or Not Applicable to the 2012 WRMP Update 4-24
4.7 Landform Alteration and Visual Aesthetics 4-25
4.7.1 Environmental Setting 4-25
4.7.2 Regulatory Framework 4-25
4.7.3 Impacts and Mitigation 4-25
4.7.4 Cumulative Impacts and Mitigation 4-27
4.7.5 CEQA Checklist Items Deemed Not Significant or Not Applicable to the 2012 WRMP Update 4-27
4.8 Land Use and Planning 4-28
4.8.1 Environmental Setting 4-28
4.8.2 Regulatory Framework 4-28
4.8.3 Impacts and Mitigation 4-28

4.8.4 Cumulative Impacts and Mitigation....4-29
4.8.5 CEQA Checklist Items Deemed Not Significant or Not Applicable to the 2012 WWMP Supplement....4-29
4.9 Noise....4-31
4.9.1 Environmental Setting....4-31
4.9.2 Regulatory Framework....4-31
4.9.3 Impacts and Mitigation....4-31
4.9.4 Cumulative Impacts and Mitigation....4-33
4.9.5 CEQA Checklist Items Deemed Not Significant or Not Applicable to the 2012 WRMP Update 4-34
4.10 Public Safety....4-35
4.10.1 Environmental Setting....4-35
4.10.2 Regulatory Framework....4-35
4.10.3 Impacts and Mitigation....4-35
4.10.4 Cumulative Impacts And Mitigation....4-37
4.10.5 CEQA Checklist Items Deemed Not Significant Or Not Applicable to the 2012 WRMP Update 4-37

CHAPTER 5.0 OTHER CEQA CONSIDERATIONS....5-1
5.1 Effects Found Not To Be Significant....5-1
5.1.1 Agricultural Resources....5-1
5.1.2 Mineral Resources....5-2
5.1.3 Transportation and Traffic....5-2
5.2 CEQA Checklist Items Not Applicable to the 2012 WRMP Update....5-3
5.2.1 Population and Housing....5-3
5.2.2 Public Services....5-3
5.2.3 Recreation....5-3
5.2.4 Transportation and Traffic....5-4
5.2.5 Utilities and Service Systems....5-4
5.3 Growth Inducement....5-4
5.3.1 San Diego Association of Governments....5-5
5.3.2 City of Chula Vista....5-5
5.3.3 OWD Forecasts....5-5
5.3.4 Direct and Indirect Growth-Inducing Effects....5-5
5.4 Significant and Unavoidable Environmental Impacts....5-6
5.5 Significant Irreversible Environmental Effects....5-6

CHAPTER 6.0 PROJECT ALTERNATIVES....6-1
6.1 Project Objectives....6-1
6.2 Otay Water District Wastewater Management Plan....6-2
6.3 Alternatives Analyzed....6-2
6.3.1 No Project Alternative....6-2

6.3.2 Eliminate Wastewater Treatment Within District 6-2
6.3.3 Recycle All Wastewater Flows Within District 6-3
6.3.4 Recycle All Wastewater Flows Within District and Expanding To Accept Wastewater From Other Service Areas 6-4

CHAPTER 7.0 ACRONYMS AND ABBREVIATIONS 7-1

CHAPTER 8.0 LIST OF PREPARERS 8-1

CHAPTER 9.0 LIST OF RECIPIENTS 9-1

Appendix A 9-1

Notice of Preparation (NOP) and responses 9-1

CHAPTER 1.0
INTRODUCTION

1.1 Project Background

The Otay Water District (OWD) was authorized as a California Special District by the State Legislature in 1956, under the provisions of the Municipal Water District Law of 1911, and thereby gained its entitlement to imported water. As a member agency of the San Diego County Water Authority (SDCWA), the OWD purchases all of the potable water that it delivers from the SDCWA. The SDCWA is responsible for transmission of the imported water supply within San Diego County to its member agencies, and is itself a member of the Metropolitan Water District of Southern California.

In 2002, the OWD developed a comprehensive Water Resources Master Plan (WRMP) that combined all previously existing master plans and facility plans into one system-wide plan outlining the Capital Improvement Program (CIP) projects required to serve their customers. The following three phases were identified in the 2002 WRMP: Phase I (2002-2006), Phase II (2007-2016), and Phase III (2017-2030).

The 2009 WRMP Update revised the OWD's 2002 WRMP; identifying the potable and recycled water CIP facilities (e.g., pump stations, storage reservoirs, transmission mains), and associated probable cost estimates, to meet projected water market demands within the OWD planning area and adjacent areas of influence; and developed a phased approach to implement the CIP projects during the following time frames: 2009-2016 (Phase II) and 2017-Ultimate (Phase III).

The purpose of the 2012 WRMP Update [Wastewater Management Plan (WWMP)] is to expand on the 2009 WRMP Update to include planning for future wastewater collection system and treatment needs. The CIP projects associated with wastewater transmission and treatment parallel and supplement those projects included and analyzed in the 2009 WRMP Update.

1.2 Intended Use and Purpose of the Supplemental Program Environmental Impact Report (SPEIR)

One of the purposes of a "Program" EIR is to provide a basis for tiering environmental documents that address subsequent activities, pursuant to CEQA Guidelines Sections 15152 and 15168(c). CEQA Guidelines Section 15168(c)(5) states, "A program EIR would be most helpful in dealing with subsequent activities if it deals with the effects of the program as specifically and comprehensively as possible. With a good and detailed analysis of the program, many subsequent activities could be found to be within the scope of the project described in the program EIR, and no further environmental documents would be required."

This SPEIR analyzes proposed (near-term; Phase II) and subsequent (long-term; Phase III) activities associated with implementation of the 2012 WRMP Update that differ from the 2009 WRMP Update. Adoption of the WRMP Update or certification of the SPEIR does not constitute a commitment to any specific CIP project or activity, construction schedule, or funding priority. Furthermore, inclusion of any conceptual plans, studies, or potential construction assumptions in this SPEIR does not constitute a commitment to such plans, studies, or assumptions. Any inconsistencies between future CIP projects or activities and conceptual plans, studies, or potential construction assumptions considered in this SPEIR

would not preclude the environmental documentation prepared for the subsequent projects or activities from tiering from this SPEIR. Such inconsistencies merely indicate that the future CIP projects or activities may not be entirely within the scope of this SPEIR, and additional analyses may be required.

The SPEIR process and the information it generates will be used for the following purposes:

- To give government officials and the community the opportunity to provide input into the decision-making process;
- To provide agencies with information necessary for them to determine if they have jurisdiction over some aspect of WRMP implementation, and, if so, to identify permitting requirements;
- To identify a range of reasonable and practicable alternatives;
- To inform the public as well as the decision makers of the environmental consequences of WRMP WWMP implementation and its alternatives and to assist agency officials in making decisions and taking actions to protect, restore, and enhance the environment;
- To assist the community in understanding the expected environmental effects and how decision- makers plan to respond to and mitigate these effects; and
- To develop mitigation measures that would reduce or eliminate the potential for environmental, public health, and safety impacts.

Subsequent environmental documents for future CIP projects that implement the 2012 WRMP Update would tier from this SPEIR, and may include Addendums, Initial Studies, Negative Declarations, Mitigated Negative Declarations, and Subsequent or Supplemental EIRs. As discussed in CEQA Guidelines Section 15152, "tiering" refers to using the analysis of general matters contained in a broader EIR with later EIRs. Tiering is accomplished by incorporating by reference the general discussions from broader EIRs. Tiering allows the subsequent environmental document to focus on those issues most relevant to its preparation.

According to CEQA Guidelines Section 15168 (c), the environmental review process for implementation of CIP projects identified in the 2012 WRMP Update WWMP should proceed along the following sequence.

> Subsequent activities in the program must be examined in the light of the Draft Supplemental Program EIR to determine whether an additional environmental document must be prepared.
>
> 1) If a later activity would have effects that were not examined in the Draft Supplemental Program EIR, a new Initial Study would need to be prepared leading to either an EIR or a Negative Declaration.
> 2) If the lead agency finds that pursuant to Section 15162, no new effects could occur or no new mitigation measures would be required, the agency can approve the activity as being within the scope of the project covered by the Draft Supplemental Program EIR, and no new environmental document would be required.
> 3) An agency shall incorporate feasible mitigation measures and alternatives developed in the Supplemental Program EIR into subsequent actions in the program.
> 4) Where the subsequent activities involve site specific operations, the agency should use a written checklist or similar device to document the evaluation of the site and

the activity to determine whether the environmental effects of the operation were covered in the Supplemental Program EIR.

CEQA Guidelines Section 15168(d) describes the CEQA review process steps for subsequent implementation projects as follows:

> A Supplemental Program EIR can be used to simplify the task of preparing environmental documents on later parts of the program. The Program EIR and the subsequent Supplemental Program EIR can:
>
> 1) Provide the basis in an Initial Study for determining whether the later activity may have any significant effects.
> 2) Be incorporated by reference to deal with regional influences, secondary effects, cumulative impacts, broad alternatives, and other factors that apply to the program as a whole.
> 3) Focus an EIR on a subsequent project to permit discussion solely of new effects, which had not been previously considered.

1.3 CEQA Requirements

The SPEIR complies with the criteria, standards, and procedures of the CEQA and the State CEQA Guidelines (California Administrative Code, Section 15000, et seq.). The OWD is the Lead Agency for the preparation of this SPEIR, as defined in CEQA Guidelines §15367.

1.3.1 Notice of Preparation/Scoping Process

Scoping is the process followed to ensure that the germane environmental concerns of individuals, organizations, and agencies about a proposed project are adequately addressed within the project's environmental document. Scoping is an integral part of the CEQA process because it allows interested parties to participate directly in the preparation of the environmental document, and to identify significant environmental effects and alternatives.

To initiate the public scoping process for this SPEIR in accordance with CEQA, the OWD circulated a Notice of Preparation (NOP) through direct mailings and published a legal notice in the San Diego Union Tribune on July 16, 2012. The 30-day public review period for the NOP ended August 15, 2012. A total of five comment letters were received during the NOP public scoping period.

A public scoping meeting was held at the OWD office, located at 2554 Sweetwater Springs Boulevard, Spring Valley, CA on August 2, 2012 at 4:00 p.m. The purpose of this meeting was to provide the public and governmental agencies with information on the 2012 WRMP Update and the CEQA process, and to give attendees an opportunity to identify environmental issues and alternatives that should be considered in the SPEIR. Attendees were invited to mail their comment letters to the OWD during the 30-day NOP public scoping period by no later than November 25, 2008, or leave them with OWD staff following the scoping meeting to ensure that their concerns would be addressed in the SPEIR. Comment forms were also available for attendees to fill out and leave with OWD staff at the scoping meeting. Although no comment forms were completed, verbal comments were received from one person at the scoping meeting.

Appendix A to this SPEIR includes the NOP and associated legal newspaper advertisement; copies of the written comments received during the NOP public scoping period; and matrices summarizing all

written and verbal comments received during the NOP public scoping period, and identifying the locations in the SPEIR where the pertinent comments are addressed.

The input received from the NOP public scoping period assisted the OWD in identifying the range of actions, alternatives, issues, and potential effects associated with the 2012 WRMP Update. All issues raised during the NOP public scoping period were reviewed by the OWD to determine the appropriate consideration and level of analysis.

1.3.2 SPEIR Public Review

The SPEIR is subject to a 45-day public review and comment period, beginning on April 10, 2013 and ending on May 24, 2013. "Responsible agencies," "trustee agencies," and interested organizations and individuals can provide written comments on the document during this review period. As defined in the State CEQA Guidelines, "responsible agencies" are those that have discretionary approval over the 2012 WRMP Update, in addition to the Lead Agency, and "trustee agencies" are those that have jurisdiction by law over natural resources affected by implementation of the 2012 WRMP Update, which are held in trust for the people of the State of California. There are no "responsible agencies" that have any discretionary approvals associated with the 2012 WRMP Update. As identified in the NOP comment letters (Appendix A to this SPEIR), the U.S. Fish and Wildlife Service (USFWS) is a "trustee agency" for the migratory birds, anadromous fish, and endangered plants, animals and their habitats under the protection of the federal Endangered Species Act (ESA) of 1973, as amended (16 United States Code [U.S.C.] 1531 et seq.), and which may be impacted by implementation of the 2012 WRMP Update. In addition, the U.S. Army Corps of Engineers (ACOE) is a "trustee agency" for the discharge of dredged or fill material into, including any redeposit of dredged material within "waters of the United States (U.S.)" and adjacent wetlands pursuant to Section 404 of the Clean Water Act (CWA) of 1972.

Written comments will be received by the OWD at the following address:

Lisa Coburn-Boyd
Otay Water District
2554 Sweetwater Springs Boulevard
Spring Valley, CA 91978-2004
Phone: (619) 670-2219
Fax: (619) 670-8920
E-mail: lisa.coburn-boyd@otaywater.gov

Copies of the SPEIR are available to the public for review at the addresses above, at the OWD website (www.otaywater.gov), and at the following public libraries:

- San Diego Main Public Library, 820 E Street, San Diego, CA 92101
- County Public Library, Rancho San Diego Branch, 11555 Via Rancho San Diego, El Cajon, CA 92019
- County Public Library, La Mesa Branch, 8074 Allison Avenue, La Mesa, CA 91941
- Chula Vista Public Library, Civic Center Branch, 365 F Street, Chula Vista, CA 91910

1.3.3 Organization of the SPEIR

The content and format of this SPEIR are designed to meet the requirements of CEQA and mimic the 2010 PEIR for the 2009 WRMP Update. This SPEIR includes the following:

- **Executive Summary.** Summarizes the proposed OWD 2012 WRMP Update, environmental impacts that would result from implementation of the proposed project, recommended mitigation measures that would avoid or reduce impacts, and the level of significance of impacts both before and after mitigation. Also identifies areas of controversy known to the Lead Agency and issues to be resolved including the choice among alternatives and whether or how to mitigated the significant effects.
- **Chapter 1, Introduction.** Provides an introduction and overview describing the purpose and intended use of the SPEIR, the SPEIR's compliance with CEQA, and the scope and organizational format of the SPEIR.
- **Chapter 2, Environmental Setting.** Provides a description of the physical environmental conditions in the vicinity of the project as they exist at the time the NOP is published, which constitute the baseline physical conditions by which OWD will determine if an impact is significant. This section also includes a discussion of the regional setting, including resources that are rare or unique to the region, and identifies any inconsistencies between the proposed project and applicable general and regional plans.
- **Chapter 3, Project Description.** Provides a detailed description of the proposed project, including its geographical setting, background information on the site's prior uses, major objectives, structural and technical characteristics and components, and project construction. This section also includes a list of discretionary actions that would be required to approve the proposed project by the Lead Agency and other Responsible and Trustee agencies.
- **Chapter 4, Scope and Format of Environmental Impact Analysis.** Contains project analysis for the various environmental issues listed above under Section 1.2.3. The subsection for each environmental topic contains a description of the existing environmental setting of the project site and area, regulatory framework, impacts and mitigation measures, cumulative impacts and mitigation, CEQA checklist items deemed not significant or not applicable to the 2012 WRMP Update, and references.
- **Chapter 5, Other CEQA Considerations.** Provides discussions required by Sections 15126 and 15128 of the State CEQA Guidelines, including effects found not to be significant during the SPEIR process, growth inducing impacts of the proposed project, significant environmental effects that cannot be avoided if the proposed project is implemented, and significant irreversible environmental changes that would result from implementation of the proposed project.
- **Chapter 6, Alternatives.** Describes alternatives to the proposed project that could avoid or substantially lessen significant effects and evaluates their environmental effects in comparison to the proposed project. The alternatives analyzed in this chapter include the No Project Alternative and the Reduced Footprint Alternative.
- **Chapter 7, Acronyms and Abbreviations.** This chapter defines the acronyms and abbreviations used throughout the SPEIR.
- **Chapters 8, List of Preparers.** This chapter provides a list of the SPEIR preparers.

- **Chapters 9, List of Recipients.** This chapter provides a list of persons/agencies to receive the SPEIR, respectively.
- **Appendix A,** Notice of Preparation (NOP) and responses

1.3.4 Other Related Environmental Documents

This SPEIR incorporates by reference the 2010 PEIR for the OWD 2009 WRMP Update (State Clearinghouse #2004011020), which was certified by the OWD Board of Directors in January, 2010. CEQA Guidelines Section 15150 provides guidance for incorporation by reference, and requires that relevant information be summarized in the subsequent environmental document provided that the previous environmental document be made available for review by the public. The 2010 PEIR for the OWD 2009 WRMP Update is available to the public for review at the OWD office listed in Section 1.3.2 above.

CHAPTER 2.0
ENVIRONMENTAL SETTING

2.1 Regional Setting

The 2010 PEIR for the 2009 WRMP Update described the overview of the regional and local environmental setting of the water supply and delivery systems within the Otay Water District and generalized information regarding natural resources and land use (Otay 2010). The WWMP applies to the region consisting of the northeastern portion of the Casa de Oro-Mount Helix community extending east to Rancho San Diego and south to Jamacha. The overall regional setting remains unchanged from the 2010 PEIR for the 2009 WRMP Update. That information is hereby incorporated by reference (OWD 2010 PEIR).

The WWMP is encompassed by the setting of the 2010 PEIR and covers wastewater pumping, transmission and treatment facilities located in the Casa de Oro-Mount Helix community. The regional setting extends just north of the Grandview Drive-Fuerte Drive intersection, south to the Jamacha Road-Willow Glen Drive intersection on the west, extending into Jamacha in the south to the southern access to Stonefield Drive, and encompassing portions of Rancho San Diego to Dehesa Road on the north and east.

2.2 Local Setting

The WWMP service area lies within south central San Diego County. Within the WWMP area there is one primary operating system for wastewater, the Hillsdale system in the North District. A brief description of the environmental setting within the WWMP operating system is included below.

2.2.1 HILLSDALE SYSTEM

The Hillsdale System, in the northern portion of the planning area, comprises 9,569 acres. Elevations range from 325 feet AMSL to 2,167 feet AMSL, and this area contains one scenic topographic feature: McGinty Mountain. In addition, Jamacha Valley and Sweetwater River traverse this service area. Approximately 50 percent of this area is urban; the remaining portions consist of Diegan Coastal Sage Scrub, Chaparral, Riparian Forest, Agriculture, Oak Woodland, and Wetlands.

CHAPTER 3.0
PROJECT DESCRIPTION

3.1 Introduction

The purpose of this chapter is to describe the proposed project for the public, reviewing agencies and decision-makers. According to the California Environmental Quality Act (CEQA) Guidelines §15124, a complete project description must contain the following information: a) the precise location and boundaries of the proposed project, shown on a detailed map, along with a regional map of the project's location; b) a statement of the underlying purpose of the project and the objectives (or goals) sought by the proposed project; c) a description of the project's technical, economic, and environmental characteristics; and d) a discussion of the intended uses of this Draft Supplemental Program Environmental Impact Report (SPEIR), including discretionary actions (refer to Section 2.0, Introduction, of this SPEIR).

A Draft Supplemental Program EIR is being prepared pursuant to CEQA Guidelines §15163, to supplement the 2010 Final Program EIR for the OWD 2009 Water Resources Master Plan Update (WRMP) because the WWMP contains many features and issues of wastewater/recycled water that have been previously addressed and analyzed within the 2009 WRMP. This document would also be prepared (pursuant to CEQA Guidelines §15168) as a Program EIR because the WWMP is a policy document that describes several wastewater alternatives for a long-term systematic approach to meet future wastewater needs through the Year 2030. The SPEIR would provide the basis for subsequent environmental review of future wastewater projects. The OWD is the Lead Agency for the preparation of this SPEIR, as defined in CEQA Guidelines §15367.

3.2 Program Location

As shown in Figure 3-1, the OWD service area is regionally located within south central San Diego County, and is bounded by rural lands to the east, the Padre Dam Municipal Water District to the north, the Helix Water District to the northwest, the Sweetwater Authority and the City of San Diego to the west, and the International Border with Mexico to the south. There are several major transportation routes though which access to the OWD is possible, including Highway 94 in the north, Interstate Highways 805 and 905 in the south and State Route 125 in the north and south.

The OWD service area consists of 80,320 acres (125.5 square miles), within south central San Diego County. Elevations within the planning area range from 59 feet above mean sea level (AMSL) to 2,605 feet AMSL. The OWD water service area is divided into two distinct systems: the North District, serving San Diego County communities above Sweetwater Reservoir, and the South District, serving the City of Chula Vista and Otay Mesa. Within these two area systems are five primary operating systems for potable water, including the Regulatory, La Presa, and Hillsdale systems in the North District and the Central and Otay Mesa systems in the South District. The OWD also maintains and operates a recycled water system in the South District (Central and Otay Mesa operating systems). In addition to water supply, the OWD

Figure 3-1

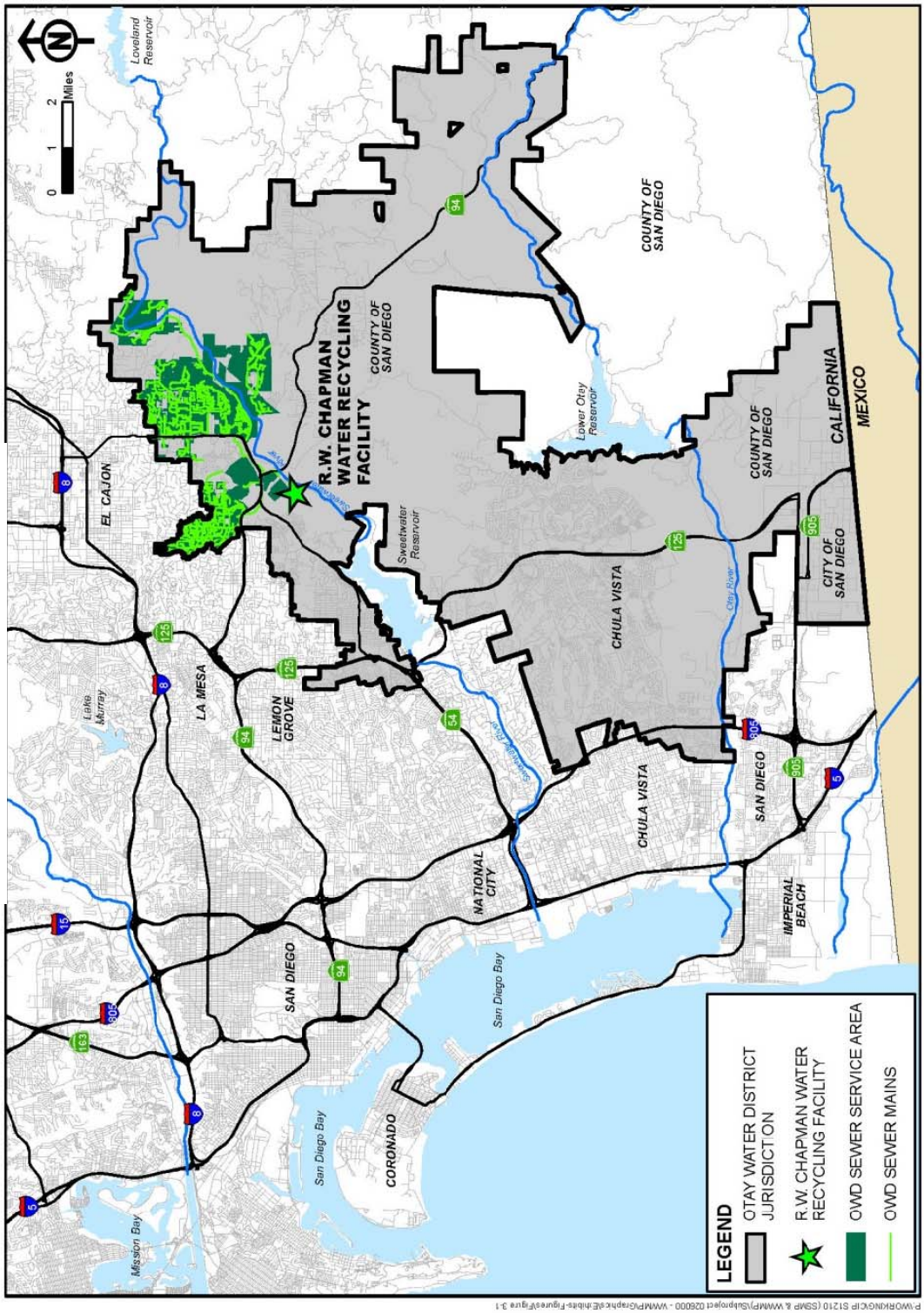

REGIONAL LOCATION MAP

also provides sewage collection, wastewater treatment, and disposal services to users within a small portion of the North District, consisting of the northeastern portion of the Casa de Oro-Mount Helix community extending east to Rancho San Diego and south to Jamacha (Figure 3-2).

3.3 Background

The OWD was authorized as a California Special District by the State Legislature in 1956, under the provisions of the Municipal Water District Law of 1911, and thereby gained its entitlement to imported water. As a member agency of the San Diego County Water Authority (SDCWA), the OWD purchases all potable water that it delivers from the SDCWA. The SDCWA is responsible for transmission of the imported water supply within San Diego County to its member agencies, and is itself a member of the Metropolitan Water District of Southern California.

The existing potable water supply to the OWD comes from the SDCWA through four separate connections to Pipeline No. 4 within the Second Aqueduct route of the SDCWA Flow Control Facility. The OWD also receives treated potable water from the R.M. Levy Water Treatment Plan (WTP), which is operated by the Helix Water District.

The Ralph W. Chapman Water Reclamation Facility (RWCWRF) operated by the OWD and the South Bay Water Reclamation Plant operated by the City of San Diego both supply recycled water for users within the OWD service area. The OWD's wastewater collection system in the North District is the source of the influent wastewater that is treated at the RWCWRF.

In 2002, the OWD developed a comprehensive WRMP that combined all previously existing master plans and facility plans into one system-wide plan outlining the Capital Improvement Program (CIP) projects required to serve their customers. The following three phases were identified in the 2002 WRMP: Phase I (2002-2006), Phase II (2007-2016), and Phase III (2017-2030).

Since 2002, the OWD has continued to improve its potable water facilities to meet the water demands associated with growth. The OWD has also continued to improve and expand its recycled water facilities to serve irrigation demands and conserve potable water supplies. The OWD's wastewater collection system and the RWCWRF have also been improved. The CIP is updated annually to reflect system improvements and to identify future needs for budgeting purposes.

3.4 Wastewater Management Plan

3.4.1 Purpose

The purpose of the Otay Water District (OWD) Wastewater Management Plan (WWMP) is to supplement the 2009 Water Resources Management Plan Update (WRMP). It identifies and evaluates current wastewater facilities (e.g., wastewater collection pipelines, pumping stations and a treatment plant), and designs feasible wastewater management strategies that allow the OWD to meet projected future wastewater needs within the OWD planning area and adjacent areas of influence. Additionally, the OWD WWMP develops a phased and systematic approach to implement the wastewater management strategies during future time frames. The OWD WWMP would ensure a wastewater system adequate for projected growth within the OWD planning area and adjacent areas of influence, consistent with the San Diego Association of Governments (SANDAG) forecasts through 2030.

Figure 3-2

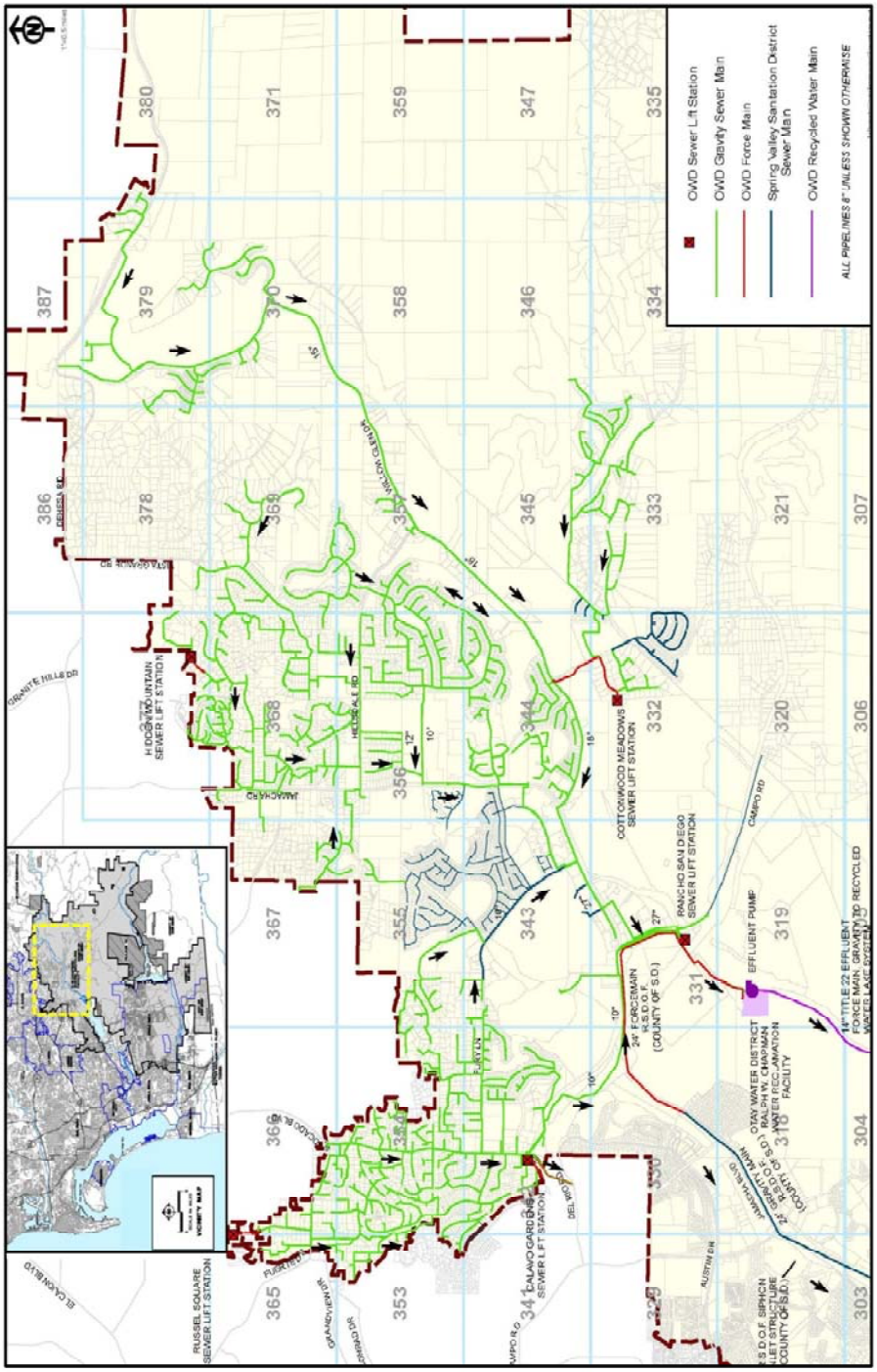

OTAY WATER DISTRICT WASTEWATER SERVICE AREA

3.4.2 Goals and Objectives

The WWMP will identify a comprehensive system-wide plan for a wastewater system within the OWD planning area and the identified area of influence. The OWD's primary objectives for the WWMP include the following actions:

- Update Planning Criteria: Update the land use database model from the 2010 WRMP using San Diego County land use updates and 2010 SANDAG land use projections. Project the wastewater flows within the District's service area and adjacent areas of influence using population (residential and employment) projections and per capita generation factors.

- Update Hydraulic Model: Update the OWD 2006 hydraulic model using data from the County's updated hydraulic model for the Jamacha Basin.

- Evaluate Existing Wastewater Systems: Make recommendations for improvements to correct deficiencies of existing systems, and to meet any demands of the planning area and identified area of influence based upon development patterns, types, location and timing.

- Evaluate Future Wastewater Systems: Using the projected wastewater collection rates for the planning area, determine new wastewater collection system facilities needs to build out and develop a list of capital improvement program projects to meet these needs. Develop strategies for treatment of the collected wastewater flows and their corresponding CIP needs.

- Update CIP: Develop a phased implementation plan for recommended CIP projects for the existing system deficiencies and any new facilities and estimate costs for identified projects.

3.4.3 Facilities Overview

The Otay Water District's existing wastewater system includes collection system pipelines, pump stations, and the wastewater treatment plant (RWCWRF).

The wastewater system includes approximately 95 miles of collection system pipelines, of which 92 miles are gravity sewers and 3 miles are force mains. The District owns approximately 78 miles of the gravity sewers, and the rest is owned by the County (please refer to Figure 3-1 in the 2012 WWMP). The gravity sewers range in diameter from 4 inches to 27 inches with the majority (84%) of the collection system being comprised of 8-inch diameter pipes. The force mains range in diameter from 4 inches to 24 inches.

Pipeline projects involve trench excavation, preparing the bed for pipe placement, laying the pipe in the trench, filling the trench, and restoring the disturbed surface area. Where it is not feasible to install a pipeline within a street right-of-way, the OWD makes every effort to use the shortest possible route between connection points to minimize ground-level impacts.

The District's wastewater system has six pump stations (please refer to Figure 3-1 in the 2012 WWMP). Pump station projects involve the movement of water uphill so that the wastewater can then flow by gravity. Pump stations typically consist of buildings containing pumps, electric power-line connections, pipeline connections, fencing, and access roads. In general, pump capacity is reported in units of gallons per minute (gpm) or millions of gallons per day (MGD).

The District owns and operates the RWCWRF. The existing capacity of the RWCWRF is 1.3 MGD, and the facility is located on a site master-planned for an ultimate build-out capacity of 3.9 MGD. The RWCWRF is a scalping plant so that any flows that exceed the capacity of the plant are disposed of via

the Rancho San Diego Outfall facilities to the San Diego Metropolitan System. This is also the case if the facility is shut down for any reason. The RWCWRF provides tertiary treatment that produces reclaimed water to meet Title 22 standards. The plant was upgraded in 2012 to include de-nitrification to reduce the effluent total nitrogen levels.

3.4.4 Description of Projects

Collection System Projects

Table 3-1 summarizes the collection system projects that are included in OWD's existing capital improvement budget. This budget includes projects from fiscal year 2013 through fiscal year 2018. These projects incorporate pipeline rehabilitation and/or replacement, manhole rehabilitation and/or replacement and pipeline spot repairs (less than 10 feet).

Table 3-1. Current Wastewater Collection System Projects – FY 2013 through FY 2018 Budget

CIP #	Description	Est. Start	Est. Finish	Current Budget
S2024	Campo Road Sewer Main Replacement	07/01/2010	06/01/2017	$5,500,000
S2028	Explorer Way 8-inch Sewer Main Replacement	07/01/2011	09/01/2016	$125,000
S2033	Sewer System Various Locations Rehabilitation	07/01/2011	09/01/2015	$800,000
S2040	Calavo Sewer Basin Improvements	07/01/2012	09/01/2014	$1,250,000
S2041	Rancho San Diego Sewer Basin Improvements	07/01/2012	09/01/2016	$1,750,000

Table 3-2 summarizes wastewater collection system improvement recommendations identified in the 2012 WWMP and the capital cost opinions for these projects. In some cases the projects have already been incorporated into the current OWD CIP Budget. For example, CIP #3 corresponds to S2024 in Table 3-1. The remaining recommended projects (CIP #1, 2, 4) are in the Rancho San Diego basin and will be considered with the improvements under CIP project S2041. The estimated total capital cost for the recommended infrastructure to correct existing system deficiencies is $8.53 million. To accommodate 2030 wastewater flows, the additional capital cost is approximately $2.72 million.

Table 3-2. Recommended Wastewater Collection System Improvements – 2012 WWMP

Project No.	Description		Location	Unit Cost ($/LF)	Conceptual Cost Opinion ($)	
					Existing	2030
Collection System Pipes						
CIP #1	12-inch	36 LF	Near Fury Lane and Jamacha Road	1,020	$37,000	--
CIP #2	24-inch	91 LF	Near Hillsdale Road and Jamacha Road	2,040	$190,000	--
CIP #3	15-inch	9,225 LF	Along Campo Road from Avocado Road to Singer Lane	900	$8,300,000	--
CIP #4	15-inch	900 LF	Near Jamacha Road and Donahue Drive	1,275	--	$1,150,000
CIP #5	15-inch	1,235 LF	Along Ivanhoe Ranch Road upstream of Cottonwood Pump Station	1,275	--	$1,570,000
Total					**$8,527,000**	**$2,720,000**

Overall Collection and Wastewater Treatment System Project Alternatives

The WWMP also identifies several alternatives for the overall system of wastewater collection and treatment within the OWD. Each alternative has different project features and components and give the OWD the most flexibility in choosing the best alternative that fulfills their wastewater strategies and meets projected future demand.

Alternative 1 -No Project Alternative

The no project alternative is the same as that presented in the 2010 PEIR and as such is incorporated by reference. This alternative represents the baseline conditions and is analyzed via the comparison to the other alternatives listed below.

Alternative 2 – Eliminate Wastewater Treatment within District

Under this alternative, the District would abandon the current wastewater treatment operations at the Ralph W. Chapman Water Recycling Facility (RWCWRF) and all wastewater flows collected by the District would be conveyed to the City of San Diego (SD) Metropolitan Wastewater System. Other components associated with this alternative include, decommissioning the RWCWRF; implementing the required Rancho San Diego Pump Station (PS) improvements; maintaining and improving the wastewater collection system based on hydraulic modeling.

Treatment options for wastewater flows being conveyed to the City of SD Metropolitan Wastewater System could be to either maintain current primary treatment or implement secondary treatment. Recycled water supply options under this alternative include receiving reclaimed water from the SBWRP and/or a proposed City of Chula Vista water reclamation facility.

Alternative 3 – Recycle All Wastewater Flows within District

Under this alternative, the District would continue collecting and treating wastewater at the RWCWRF under the current capacity of 1.3 MGD or operations could potentially be expanded to approximately 2.6 MGD. Excess flows beyond the RWCWRF's capacity would be conveyed to the City of SD Metropolitan Wastewater System. Other components associated with this alternative include implementing the required Rancho San Diego PS improvements and maintaining and improving the wastewater collection system based on hydraulic modeling.

Options for solid waste disposal would include continuing current practices of conveyance to the Metropolitan Wastewater System or handling/treating solid waste onsite and disposing residuals in landfill. Treatment options for wastewater flows being conveyed to the City of SD Metropolitan Wastewater System could be to either maintain current primary treatment or implement secondary treatment. Recycled water supply options under this alternative include receiving reclaimed water from the RWCWRF, the SBWRP and/or a proposed City of Chula Vista water reclamation facility.

Alternative 4 – Recycle All Wastewater Flows within District and Expand To Accept Wastewater From Other Service Areas

Under this alternative, the District would continue collecting and treating wastewater at the RWCWRF under an increased capacity of up to approximately 3.9 MGD. Under this scenario, the District would be able to treat all wastewater from the Jamacha Basin and any other service areas that needed wastewater treatment. Excess flows beyond the RWCWRF's capacity (if any) would be conveyed to the City of SD Metropolitan Wastewater System. Other components associated with this alternative include

implementing the required Rancho San Diego PS improvements and maintaining and improving the wastewater collection system based on hydraulic modeling.

Options for solid waste disposal would include continuing current practices of conveyance to the Metropolitan Wastewater System or handling/treating solid waste onsite and disposing residuals in landfill. Treatment options for wastewater flows being conveyed to the City of SD Metropolitan Wastewater System could be to either maintain current primary treatment or implement secondary treatment. Recycled water supply options under this alternative include receiving reclaimed water from the RWCWRF, the SBWRP and/or a proposed City of Chula Vista water reclamation facility.

3.4.5 Phasing

Phasing for the recommended CIP projects may be accelerated or deferred as required to account for changes in development project schedules, availability of land or right-of-way for construction, project funding limitations, environmental concerns or other considerations.

3.4.6 Permits, Approvals, and Regulatory Requirements

Numerous federal, State and local regulations and permit requirements would be applicable to the implementation of the 2012 WMMP Update (2009 WRMP Update) (Table 3-3). The OWD, or its contractors, would be required to comply with all applicable requirements, unless by exception of Government Code Section 53091.

Table 3-3. Potential Permits and Approvals

Agency/Department	Permit/Approval	Action Associated With or Required For
Federal Agencies		
USFWS	Biological Assessment, Section 7 Consultation, Biological Opinion (Endangered Species Act [ESA] 16 U.S.C. 1531-1544)	Activity where there may be an effect on federally-listed endangered/threatened/ proposed species (applies to projects with federal involvement).
	Fish and Wildlife Coordination Act	Provide comments to prevent loss of, and damage to, wildlife resources.
ACOE	Individual/Nationwide Section 404 Permit (CWA, 33 USC 1341)	Discharge of dredge/fill into Waters of the U.S., including wetlands.
	Section 10, Rivers and Harbors Act Permit	Activities, including the placement of structures, affecting navigable waters.
Advisory Council on Historic Preservation	Section 106 Consultation, National Historic Preservation Act (NHPA)	Opportunity to comment if project may affect cultural resources listed or eligible for listing on National Register of Historic Places (NRHP).
U.S. Department of Transportation (USDOT), Federal Highway Administration (FHA)	Encroachment Permits	Consider issuance of permit for transmission line crossing of federally-funded highways.
U.S. Department of the Treasury, Bureau of Alcohol, Tobacco and Firearms	Explosive User's Permit	Consider issuance of permit to purchase, store and use explosives for site preparation.
State Agencies		

Agency/Department	Permit/Approval	Action Associated With or Required For
State Water Resources Control Board (SWRCB), Regional Water Quality Control Board (RWQCB)	General Construction Activity Stormwater Permit	Stormwater discharges associated with construction activity.
	Waste Discharge Requirements (Water Code 13000 *et seq.*)	Discharge of waste that might affect groundwater or surface water (nonpoint-source) quality.
	401 Certification (CWA, 33 USC 1341. If the project requires ACOE 404 Permit)	Discharge into waters and wetlands (see ACOE Section 404 Permit).
California State Lands Commission	Right-of-Way Permit (Land Use Lease)	Consider issuance of a grant of right-of-way across State land.
California Department of Fish and Wildlife (CDFW)	California ESA	Activity where a listed candidate, threatened, or endangered species under California ESA may be present in the project area and a State agency is acting as lead agency for CEQA compliance. Consider issuance of a Section 2081 incidental take permit for State-only listed species and a Section 2081.1 consistency determination for effects on species that are both federally and State listed.
California Department of Fish and Wildlife (CDFW)	California Native Plant Protection Act	Review of mitigation agreement and mitigation plan for plants listed as rare.
	Lake/Streambed Alteration Agreement (California Fish and Game Code Section 1601)	Change in natural state of river, stream or lake (includes road or land construction across a natural streambed).
California Department of Transportation (Caltrans)	Encroachment Permit	Consider issuance of permits to cross State highways.
California Coastal Commission (CCC)	Coastal Development Permit	Development within the Coastal Zone.
California State Historic Preservation Office	Section 106 Consultation, NHPA	Consult with Bureau of Land Management (BLM), project applicant, appropriate land management agencies, and others regarding activities potentially affecting cultural resources.
Local Agencies		
County of San Diego Department of Environmental Health (DEH)	Hazardous Materials Business Plan	Hazardous material exceeding federal threshold quantities.
	Hazardous Materials Inventory	Hazardous materials exceeding County threshold quantities.
San Diego Country, Sheriff's Department	Explosives Permit	Consider issuance of a license to store flammable explosives.
San Diego Air Pollution Control District (SDAPCD)	Authority to Construct	Emissions from a stationary source.
	Permit to Operate	Equipment emitting pollutants from a stationary source.

CHAPTER 4.0
SCOPE AND FORMAT OF ENVIRONMENTAL IMPACT ANALYSIS

The discussion in this chapter resulted from supplemental information and alternatives to the OWD Wastewater Management Plan (WWMP). This included information related to existing site conditions, analyses of the type and magnitude of individual and cumulative environmental impacts, and feasible mitigation measures that could reduce or avoid environmental impacts. Analyses performed and presented in Chapter 4.0 of the 2010 Water Resources Master Plan (WRMP) PEIR are included in their entirety by reference (Otay 2010).

The SPEIR is intended as a basic reference document to avoid unnecessary repetition of facts or analysis contained in the 2010 WRMP PEIR. Therefore, this SPEIR only contains significant updated technical information or other significant supplemental information to supplement the previous PEIR for the WWMP analysis.

Scope of the Environmental Impact Analysis

This SPEIR falls entirely within the area analyzed by the 2010 PEIR without exception and therefore assumes the same scope. That information is hereby incorporated by reference (Otay 2010).

Format of the Environmental Impact Analysis

The following subsections comprise each of the ten environmental topic sections in Chapter 4.0 of this SPEIR.

Environmental Setting

This SPEIR falls entirely within the physical area analyzed by the 2010 PEIR without exception and therefore assumes the same scope. That information is hereby incorporated by reference (Otay 2010).

Regulatory Framework

This SPEIR falls entirely within the regulatory jurisdiction analyzed by the 2010 PEIR without exception and therefore assumes the same scope. That information is hereby incorporated by reference (Otay 2010).

Impacts and Mitigation

This SPEIR falls entirely within the area analyzed by the 2010 PEIR without exception and therefore has no changes to the methodology determining impacts and mitigation. That information is hereby incorporated by reference (Otay 2010).

Project Design Features/Standard Construction Practices

This SPEIR falls entirely within the area analyzed by the 2010 PEIR without exception and therefore assumes the same design and practices standards will be applied. That information is hereby incorporated by reference (Otay 2010).

Standards of Significance

This SPEIR falls entirely within the area analyzed by the 2010 PEIR without exception and therefore assumes the same standards of significance. That information is hereby incorporated by reference (Otay 2010).

Impact Analysis

This SPEIR falls entirely within the area analyzed by the 2010 PEIR without exception and therefore employs the same impact analysis. That information is hereby incorporated by reference (Otay 2010)

Mitigation/Performance Measures

This SPEIR falls entirely within the area analyzed by the 2010 PEIR without exception and therefore assumes the same mitigation and performance measures. That information is hereby incorporated by reference (Otay 2010).

Cumulative Impacts and Mitigation

This SPEIR falls entirely within the area analyzed by the 2010 PEIR without exception and therefore has no changes to the methodology determining cumulative impacts and mitigation. That information is hereby incorporated by reference (Otay 2010).

Regional Land Use Planning and Projected Growth

This SPEIR falls entirely within the area analyzed by the 2010 PEIR without exception and therefore has no changes to regional land use planning and projected growth. That information is hereby incorporated by reference (Otay 2010).

San Diego County General Plan

This SPEIR falls entirely within the area analyzed by the 2010 PEIR without exception and therefore has no changes to the analysis of effects on the San Diego County General Plan. That information is hereby incorporated by reference (Otay 2010).

Incorporated City General Plans

This SPEIR falls entirely within the area analyzed by the 2010 PEIR without exception and therefore has no changes to the analysis of effects on the Incorporated City General Plans. That information is hereby incorporated by reference (Otay 2010).

Baja California, Mexico

This SPEIR falls entirely within the area analyzed by the 2010 PEIR without exception and therefore has no changes to the analysis of effects on the Baja California region. That information is hereby incorporated by reference (Otay 2010).

2030 San Diego Regional Transportation Plan

This SPEIR falls entirely within the area analyzed by the 2010 PEIR without exception and therefore has no changes to the analysis of effects on the San Diego Regional Transportation Plan. That information is hereby incorporated by reference (Otay 2010).

Cumulative Project Identified in the 2002 WRMP

This SPEIR falls entirely within the area analyzed by the 2010 PEIR without exception and therefore has no changes to the analysis of effects on the San Diego County General Plan. That information is hereby incorporated by reference (Otay 2010).

Cumulative Projects in the Unincorporated Portions of the WRMP Planning Area

This SPEIR falls entirely within the area analyzed by the 2010 PEIR without exception and therefore has no changes to the analysis of effects on the Cumulative Projects in the Unincorporated Portions of the WRMP Planning Area. That information is hereby incorporated by reference (Otay 2010).

Cumulative Projects on Tribal Lands (Sycuan Reservation)

This SPEIR falls entirely within the area analyzed by the 2010 PEIR without exception and therefore has no changes to the analysis of effects on the Cumulative Projects on Tribal Lands (Sycuan Reservation). That information is hereby incorporated by reference (Otay 2010).

Cumulative Regional Energy and Utility Projects

This SPEIR falls entirely within the area analyzed by the 2010 PEIR without exception and therefore has no changes to the analysis of effects on Cumulative Regional Energy and Utility Projects. That information is hereby incorporated by reference (Otay 2010).

CEQA Checklist Items Deemed Not Applicable

This SPEIR falls entirely within the area analyzed by the 2010 PEIR without exception and does not present any impacts that differ significantly from those analyzed in the 2010 PEIR. Therefore those items deemed not applicable within the 2010 PEIR CEQA Checklist are also deemed as such in the SPEIR. That information is hereby incorporated by reference (Otay 2010).

4.1 Air Quality and Global Climate Change

This section of the SPEIR for the 2012 WRMP Update describes existing conditions within the planning area with respect to air quality and global climate change; the potential physical environmental effects (direct, indirect, and/or cumulative) related to these issues resulting from development of projects under the WWMP; and the project design features (PDF), standard construction practices (SCP), and mitigation/performance measures to reduce or avoid the identified impacts.

4.1.1 Environmental Setting

Climatology

This SPEIR falls entirely within the area analyzed by the 2010 PEIR without exception and therefore assumes the same environmental setting. That information is hereby incorporated by reference (Otay 2010). No significantly new information has occurred since the certification of the 2010 PEIR and so no new information is presented to supplement this section of the 2010 PEIR.

Existing Air Quality within the Planning Area

This SPEIR falls entirely within the area analyzed by the 2010 PEIR without exception and therefore the same environmental setting. That information is hereby incorporated by reference (Otay 2010). No significantly new information has occurred since the certification of the 2010 PEIR and so no new information is presented to supplement this section of the 2010 PEIR.

Greenhouse Gases

This SPEIR falls entirely within the area analyzed by the 2010 PEIR without exception and therefore the same environmental setting. That information is hereby incorporated by reference (Otay 2010). No significantly new information has occurred since the certification of the 2010 PEIR and so no new information is presented to supplement this section of the 2010 PEIR.

4.1.2 Regulatory Framework

Federal

This SPEIR falls entirely within the area analyzed by the 2010 PEIR without exception and therefore is subject to the same regulatory framework. That information is hereby incorporated by reference (Otay 2010). No significantly new information has occurred since the certification of the 2010 PEIR and so no new information is presented to supplement this section of the 2010 PEIR.

State

This SPEIR falls entirely within the area analyzed by the 2010 PEIR without exception and therefore is subject to the same regulatory framework. That information is hereby incorporated by reference (Otay 2010). No significantly new information has occurred since the certification of the 2010 PEIR and so no new information is presented to supplement this section of the 2010 PEIR.

Local

This SPEIR falls entirely within the area analyzed by the 2010 PEIR without exception and therefore is subject to the same regulatory framework. That information is hereby incorporated by reference (Otay 2010). No significantly new information has occurred since the certification of the 2010 PEIR and so no

new information is presented to supplement this section of the 2010 PEIR.

4.1.3 Project Impacts and Mitigation

Issue 1 – Consistency with Applicable Air Quality Plans

Air Quality and Climate Change Issue 1 Summary	
Would implementation of the 2012 WRMP Update result in a conflict with or obstruct implementation of the applicable air quality plan?	
Impact: Growth assumptions made within the 2012 WRMP Update to determine future service requirements have already been accounted for within the 2009 SDAPCD RAQS and 2007 SIP; therefore, the 2012 WRMP Update would not conflict with or obstruct implementation of the applicable air quality plan.	**Mitigation:** No mitigation is required.
Significance Before Mitigation: Less than significant.	**Significance After Mitigation:** Less than significant.

No significantly new information has occurred since the certification of the 2010 PEIR and so no new information is presented to supplement this section of the 2010 PEIR. The construction and operation of the CIP projects identified in the WWMP fall wholly within the Northeast corner of the 2009 WRMP Update area. Therefore, comparable to the 2009 WRMP as analyzed by the 2010 PEIR, impacts to air quality will be avoided or fully mitigated. That information is hereby incorporated by reference (Otay 2010).

Issue 2 – Consistency with Air Quality Standards

Air Quality and Global Climate Change Issue 2 Summary	
Would implementation of the 2012 WRMP Update violate any air quality standard or contribute substantially to an existing or projected air quality violation?	
Impact: Implementation of standard construction practices (Air-SCP-1and Air-SCP-2) would minimize air pollutant emissions from construction activities. However, as the details regarding number and type of construction equipment are unknown at this time, emissions may result in a violation of air quality standards, and therefore construction impacts are considered potentially significant. Once constructed, operational sources of air pollutants from the CIP projects would be less than significant.	**Mitigation:** An air quality technical study shall be prepared for each CIP project once the project reaches the design stage to ensure that air pollutant emissions associated with construction activity are within the screening thresholds established by the SDAPCD (Air-1).
Significance Before Mitigation: Potentially significant.	**Significance After Mitigation:** Less than significant.

No significantly new information has occurred since the certification of the 2010 PEIR and so no new information is presented to supplement this section of the 2010 PEIR. The construction and operation of the CIP projects identified in the WWMP fall wholly within the Northeast corner of the 2009 WRMP Update area. Therefore, comparable to the 2009 WRMP as analyzed by the 2010 PEIR, impacts to air quality will be avoided or fully mitigated. That information is hereby incorporated by reference (Otay 2010).

Issue 3 – Consistency with Applicable Policies Adopted for the Purpose of Reducing the Emissions of Greenhouse Gases

Air Quality and Global Climate Change Issue 3 Summary ***Would implementation of the 2012 WRMP Update conflict with any applicable plan, policy, or regulation of an agency adopted for the purpose of reducing the emissions of greenhouse gases?***	
Impact: Implementation of standard construction practices (Air-SCP-3 through Air-SCP-7) and energy efficiency measures (Ene-1 through Ene-4) would incorporate all applicable features that are consistent with measures recommended by the California Climate Action Team, CAPCOA, California Attorney General and the County of San Diego for assisting the State of California in the attainment of the goals of AB 32.	**Impact:** Implementation of standard construction practices (Air-SCP-3 through Air-SCP-7) and energy efficiency measures (Ene-1 through Ene-4) would incorporate all applicable features that are consistent with measures recommended by the California Climate Action Team, CAPCOA, California Attorney General and the County of San Diego for assisting the State of California in the attainment of the goals of AB 32.
Significance Before Mitigation: Less than significant.	**Significance Before Mitigation:** Less than significant.

No significantly new information has occurred since the certification of the 2010 PEIR and so no new information is presented to supplement this section of the 2010 PEIR. The construction and operation of the CIP projects identified in the WWMP fall wholly within the Northeast corner of the 2009 WRMP Update area. Therefore, comparable to the 2009 WRMP as analyzed by the 2010 PEIR, impacts to air quality will be avoided or fully mitigated. That information is hereby incorporated by reference (Otay 2010).

4.1.4 Cumulative Impacts and Mitigation

Air Quality, Climate Change, and Global Warming Cumulative Issue Summary ***Would implementation of the 2012 WRMP Update have a cumulatively considerable contribution to a cumulative air quality impact considering past, present, and probable future projects?***		
Cumulative Impact	**Significant**	**WRMP Contribution**
Consistency with applicable air quality plan.	Less than significant.	Not cumulatively considerable.
Consistency with air quality standards.	Potentially significant	Not cumulatively considerable with implementation of Air-SCP-1, Air-SCP-2 and Air-1.
Greenhouse gas emissions.	Yes.	Not cumulatively considerable with implementation of Air-SCP-1 through Air- SCP-3 and Ene-PDF-1through Ene-PDF-4.

Issue 1 – Consistency with Applicable Air Quality Plans

No significantly new information has occurred since the certification of the 2010 PEIR and so no new information is presented to supplement this section of the 2010 PEIR. The construction and operation of the CIP projects identified in the WWMP fall wholly within the Northeast corner of the 2009 WRMP Update area. Therefore, comparable to the 2009 WRMP as analyzed by the 2010 PEIR, impacts to air quality will be avoided or fully mitigated. That information is hereby incorporated by reference (Otay 2010).

Issue 2 – Consistency with Air Quality Standards

The construction and operation of the CIP projects identified in the WWMP fall wholly within the Northeast corner of the 2009 WRMP Update area. Therefore, comparable to the 2009 WRMP as analyzed by the 2010 PEIR, impacts to air quality will be avoided or fully mitigated. That information is hereby incorporated by reference (Otay 2010).

4.1.5 CEQQ Checklist Items Deemed Not Significant or Not Applicable to the 2012 WRMP Update

The construction and operation of the CIP projects identified in the WWMP fall wholly within the Northeast corner of the 2009 WRMP Update area. Therefore comparable to the 2009 WRMP as analyzed by the 2010 PEIR, impacts to air quality will be avoided or fully mitigated. That information is hereby incorporated by reference (Otay 2010).

4.2 Biological Resources

The 2010 PEIR for the 2009 WRMP Update described existing conditions within the planning area with respect to biological resources; the potential physical environmental effects (direct, indirect, and/or cumulative) related to these issues resulting from development of projects under the WWMP; and the project design features, standard construction practices, and mitigation/ performance measures to reduce or avoid the identified impacts (Otay 2010).

This section of the SPEIR is intended to supplement the previous information and analysis contained within the corresponding section of the 2010 PEIR. The analysis of the WWMP does not significantly differ, unless indicated below, from the original analysis within the 2010 PEIR and therefore does not need additional analysis/updating. That information is hereby incorporated by reference (Otay 2010).

4.2.1 Environmental Setting

Research Methods

The construction and operation of the CIP projects identified in the WWMP fall wholly within the Northeast corner of the 2009 WRMP Update area. Therefore research methods are identical to the 2009 WRMP as analyzed by the 2010 PEIR. That information is hereby incorporated by reference (Otay 2010).

Biological Resources

The construction and operation of the CIP projects identified in the WWMP fall wholly within the Northeast corner of the 2009 WRMP Update area. Therefore biological resources are identical to those in the 2009 WRMP as analyzed by the 2010 PEIR. That information is hereby incorporated by reference (Otay 2010).

Special-Status Biological Resources

The construction and operation of the CIP projects identified in the WWMP fall wholly within the Northeast corner of the 2009 WRMP Update area. Therefore special-status biological resources are identical to those in the 2009 WRMP as analyzed by the 2010 PEIR. That information is hereby incorporated by reference (Otay 2010).

4.2.2 Regulatory Framework

Federal Regulations

The construction and operation of the CIP projects identified in the WWMP fall wholly within the Northeast corner of the 2009 WRMP Update area. Therefore comparable to the 2009 WRMP as indicated by the 2010 PEIR the same Federal Regulations apply. That information is hereby incorporated by reference (Otay 2010).

State Regulations

The construction and operation of the CIP projects identified in the WWMP fall wholly within the Northeast corner of the 2009 WRMP Update area. Therefore comparable to the 2009 WRMP as indicated by the 2010 PEIR the same State Regulations apply. That information is hereby incorporated by reference (Otay 2010). Since the 2010 PEIR the State agency governing biological resources has changed names from California Department of Fish and Game (CDFG) to California Department of Fish and Wildlife

(CDFW) all references in the original 2010 PEIR to the California Department of Fish and Game (CDFG) should now read California Department of Fish and Wildlife (CDFW).

Local Regulations

The construction and operation of the CIP projects identified in the of the WWMP fall wholly within the Northeast corner of the 2009 WRMP Update area. Therefore comparable to the 2009 WRMP as indicated by the 2010 PEIR the same Local Regulations apply. That information is hereby incorporated by reference (Otay 2010).

4.2.3 Impacts and Mitigation

Issue 1 – Sensitive Species and Habitats

Biological Resources Issue 1 Summary	
Would implementation of the 2012 WRMP Update result in a substantial adverse effect, either directly or through habitat modifications, on any sensitive or special-status species or sensitive habitats?	
Impact: Implementation of the 2012 WRMP Update would result in direct impacts to sensitive plant and animal species.	**Mitigation**: Pre-construction surveys and noise attenuation (Bio-1A through Bio-1C); shielding of construction lighting (Bio-1D); delineation of construction limits and staging areas (Bio-1E)
Significance Before Mitigation: Potentially significant.	**Significance After Mitigation**: Less than significant.

The construction and operation of the CIP projects identified in the WWMP fall wholly within the Northeast corner of the 2009 WRMP Update area. Therefore, comparable to the 2009 WRMP as analyzed by the 2010 PEIR, impacts to sensitive species and habitats will be avoided or fully mitigated. That information is hereby incorporated by reference (Otay 2010).

4.2.4 Cumulative Impacts and Mitigation

Sensitive Species and Habitats

Biological Resources Cumulative Issue Summary		
Would implementation of the 2012 WRMP Update have a cumulatively considerable contribution to a cumulative biological resources impact considering past, present, and probable future projects?		
Cumulative Impact	**Significance**	**Proposed Project Contribution**
Regional loss of sensitive plants, animals, and vegetation communities.	Potentially significant.	Not cumulatively considerable with implementation of performance measures Bio-1A through Bio-1E.

The construction and operation of the CIP projects identified in the WWMP fall wholly within the Northeast corner of the 2009 WRMP Update area. Therefore, comparable to the 2009 WRMP as analyzed by the 2010 PEIR, cumulative impacts to sensitive species and habitats will be avoided or fully mitigated. That information is hereby incorporated by reference (Otay 2010).

4.2.5 CEQA Checklist Items Deemed Not Significant or Not Applicable to the 2012 WRMP Update

The construction and operation of the CIP projects identified in the WWMP fall wholly within the Northeast corner of the 2009 WRMP Update area. Therefore CEQA Checklist Items Deemed Not Significant or Not Applicable to the 2012 WRMP Update are identical to the 2009 WRMP as analyzed by the 2010 PEIR. That information is hereby incorporated by reference (Otay 2010).

4.3 Cultural Resources

The 2010 PEIR for the 2009 WRMP Update described existing conditions within the planning area with respect to cultural resources; the potential physical environmental effects (direct, indirect, and/or cumulative) related to these issues resulting from development of projects under the WWMP; and the project design features (PDF), standard construction practices (SCP), and mitigation/performance measures to reduce or avoid the identified impacts (Otay 2010).

This section of the SPEIR is intended to supplement the previous information and analysis contained within the corresponding section of the 2010 PEIR. The analysis of the WWMP does not significantly differ, unless indicated below, from the original analysis within the 2010 PEIR and therefore does not need additional analysis/updating. That information is hereby incorporated by reference (Otay 2010).

4.3.1 Environmental Setting

Prehistoric Setting

The construction and operation of the CIP projects identified in the WWMP fall wholly within the Northeast corner of the 2009 WRMP Update area. Therefore the prehistoric setting is identical to the 2009 WRMP as analyzed by the 2010 PEIR. That information is hereby incorporated by reference (Otay 2010).

Historic Setting

The construction and operation of the CIP projects identified in the WWMP fall wholly within the Northeast corner of the 2009 WRMP Update area. Therefore the historic setting is identical to the 2009 WRMP as analyzed by the 2010 PEIR. That information is hereby incorporated by reference (Otay 2010).

4.3.2 Regulatory Framework

Federal

The construction and operation of the CIP projects identified in the WWMP fall wholly within the Northeast corner of the 2009 WRMP Update area. Therefore federal regulations are identical to the 2009 WRMP as analyzed by the 2010 PEIR. That information is hereby incorporated by reference (Otay 2010).

State

The construction and operation of the CIP projects identified in the WWMP fall wholly within the Northeast corner of the 2009 WRMP Update area. Therefore state regulations are identical to the 2009 WRMP as analyzed by the 2010 PEIR. That information is hereby incorporated by reference (Otay 2010).

Local

The construction and operation of the CIP projects identified in the WWMP fall wholly within the Northeast corner of the 2009 WRMP Update area. Therefore local regulations are identical to the 2009 WRMP as analyzed by the 2010 PEIR. That information is hereby incorporated by reference (Otay 2010).

4.3.3 Impacts and Mitigation

Issue 1 – Historical Resources

Cultural Resources Issue 1 Summary	
Would implementation of the 2009 WRMP Update cause a substantial adverse change in the significance of an historical resource as defined in Section 15064.5?	
Impact: Implementation of a historical building assessment prior to demolition of PS 657-1 and PS 850-1, and a subsequent documentation/treatment program as necessary, would reduce impacts to potential historical resources.	**Mitigation:** No further mitigation is required.
Significance Before Mitigation: Less than significant.	**Significance After Mitigation:** No Impact.

The construction and operation of the CIP projects identified in the WWMP fall wholly within the Northeast corner of the 2009 WRMP Update area. Therefore the historical resources setting is identical to the 2009 WRMP as analyzed by the 2010 PEIR. That information is hereby incorporated by reference (Otay 2010).

Issue 2 – Archaeological Resources

Cultural Resources Issue 2 Summary	
Would implementation of the 2012 WRMP Update cause a substantial adverse change in the significance of an archaeological resource pursuant to Section 15064.5?	
Impact: Ground disturbance associated with construction of certain CIP projects under the 2012 WRMP Update has the potential to impact potentially significant unknown archaeological resources.	**Mitigation:** Implementation of a cultural resources monitoring and data recovery program by a qualified archaeologist (Cul-2A through Cul-2C).
Significance Before Mitigation: Potentially Significant.	**Significance After Mitigation:** Less than Significant.

Impact Analysis

It is assumed that ground disturbing activities associated with the WWMP Projects are similar to those in the 2009 WRMP Update. This section contained within the 2010 PEIR, would not need further updating. That information is hereby incorporated by reference (Otay 2010).

Issue 3 – Human Remains

Cultural Resources Issue 3 Summary	
Would implementation of the 2012 WRMP Update disturb any human remains, including those interred outside of formal cemeteries?	
Impact: Native American or other human remains could be encountered during ground disturbance associated with construction of certain CIP projects under the 2012 WRMP Update; however, compliance with the California Health and Safety Code (Cul-SCP-1) would reduce impacts associated with discovery of human remains.	**Mitigation:** No mitigation is required.
Significance Before Mitigation: Less than significant.	**Significance After Mitigation:** Less than significant.

Impact Analysis

Comparable to the 2009 WRMP Update, the WWMP would not result in any significant impacts to Archaeological Resources or Human Remains if mitigation measures and PDFs/SCPs are followed. That information is hereby incorporated by reference (Otay 2010).

4.3.4 Cumulative Impacts and Mitigation

Cultural Resources Cumulative Issue Summary

Would implementation of the 2012 WRMP Update have a cumulatively considerable contribution to a cumulative cultural resources impact considering past, present, and probable future projects?

Cumulative Impact	Significant	WRMP Contribution
Regional loss of archaeological resources.	Yes	Not cumulatively considerable with implementation of measures Cul-2A through Cul-2C.
Regional loss of Native American human remains	Yes	Not cumulatively considerable with implementation of Cul-SCP-1.

Impact Analysis

Comparable to the 2009 WRMP Update, the WWMP would not result in any cumulatively significant impacts to Archaeological Resources or Human Remains if mitigation measures and PDFs/SCPs are followed. That information is hereby incorporated by reference (Otay 2010).

4.3.5 CEQA Checklist Items Deemed Not Significant or Not Applicable to the 2012 WRMP Update

The construction and operation of the CIP projects identified in the WWMP fall wholly within the Northeast corner of the 2009 WRMP Update area. Therefore CEQA Checklist Items Deemed Not Significant or Not Applicable to the 2012 WRMP Update are identical to the 2009 WRMP as analyzed by the 2010 PEIR. That information is hereby incorporated by reference (Otay 2010).

4.4 Energy

Public Resources Code Section 21100(b)(3), CEQA Guidelines Section 15126.4, and CEQA Appendix F Energy Conservation require an analysis of the proposed project's energy consumption, to determine if the construction and operation of the project would employ a wise and efficient use of energy. An analysis of the proposed project's energy usage was included in the 2010 PEIR, Section 4.4 – Energy (Otay 2010).

This section of the SPEIR is intended to supplement the previous information and analysis contained within the corresponding section of the 2010 PEIR. For the analysis of the WWMP, some of the original analysis within the PEIR was not significantly changed and therefore does not need additional analysis/updating. That information is hereby incorporated by reference (Otay 2010).

Energy usage by the proposed project is also a consideration in assessing project impacts to global climate change. For further discussion of this issue, please refer to Section 4.1, Air Quality and Global Climate Change in this SPEIR and/or in the 2010 PEIR.

4.4.1 Environmental Setting

Existing Conditions

The construction and operation of the CIP projects identified in the WWMP fall wholly within the Northeast corner of the 2009 WRMP Update area. Therefore existing conditions are identical to the 2009 WRMP as analyzed by the 2010 PEIR. That information is hereby incorporated by reference (Otay 2010).

4.4.2 Regulatory Framework

State

The construction and operation of the CIP projects identified in the WWMP fall wholly within the Northeast corner of the 2009 WRMP Update area. Therefore the regulations are identical to the 2009 WRMP as analyzed by the 2010 PEIR. That information is hereby incorporated by reference (Otay 2010).

4.4.3 Impacts and Mitigation

Issue 1 – Energy Consumption

Energy Issue 1 Summary ***Would implementation of the 2012 WRMP Update result in the inefficient, wasteful, and unnecessary use of energy?***	
Impact: The construction and operation of CIP projects under the 2012 WRMP Update would result in the consumption of energy, however, implementation of energy efficient measures (Ene-PDF-1, Ene-PDF-2, Ene- PDF-3, and Ene-PDF-4) at WMMP CIP projects would ensure that energy use would not be inefficient, wasteful, or unnecessary.	**Mitigation:** No mitigation is required.
Significance Before Mitigation: Less than significant.	**Significance After Mitigation:** Less than significant.

Impact Analysis

Project Construction. Without further details regarding site conditions and specific equipment to be used, it is assumed that construction and/or demolition activities associated with all of the WWMP Projects are similar to those described within the 2009 WRMP Update (Otay 2010). Therefore, further analysis is not required.

Project Operation. Traffic generations associated with implementation of the WWMP are not anticipated to be significantly different to that analyzed in the 2010 PEIR and so the impact associated with energy for the 201 PEIR are incorporated by reference.

In the 2010 PEIR, it was determined that the proposed pump stations would demand the most energy. Under each alternative of the WWMP, improvements to the existing Rancho San Diego pump station (PS) are proposed. Since the Rancho San Diego PS is already in service, it would not require any more energy demand. Improvements would most likely make the pumps run more efficiently, thus reducing energy consumption.

Alternatives 3 and 4 propose expanding wastewater treatment capabilities of the RWCWRF (Otay 2012). This would result in an increase in energy demand however this increase can be comparable to the energy requirements of the larger pump stations previously analyzed in the 2010 PEIR. Those pump stations, with their associated Project Design Features (Ene-PDF-1 through Ene-PDF-4), were determined to have a less than significant impact to Energy.

Therefore an expansion of the RWCWRF would not represent a significant increase in energy consumption and would also be less than significant. Refer to Section 4.4.3.1, pp. 4.4-2 to 4.4-4 in the 2010 PEIR for impact analysis and required PDFs (Otay 2010).

4.4.4 Cumulative Impacts and Mitigation

Energy Cumulative Issue Summary

Would implementation of the 2012 WRMP Update have a cumulatively considerable contribution to the inefficient, wasteful, and unnecessary use of energy considering past, present, and probable future projects?

Cumulative Impact	Significant	WRMP Contribution
Energy Consumption	No	Not cumulatively considerable with implementation of measures Ene-PDF-1 through Ene-PDF-4.

Impact Analysis

The construction and operation of the CIP projects identified in the WWMP fall wholly within the Northeast corner of the 2009 WRMP Update area. Therefore the energy usage is identical to the 2009 WRMP as analyzed by the 2010 PEIR. That information is hereby incorporated by reference (Otay 2010).

4.4.5 CEQA Checklist Items Deemed Not Significant or Not Applicable to the 2012 WRMP Update

The construction and operation of the CIP projects identified in the WWMP fall wholly within the Northeast corner of the 2009 WRMP Update area. Therefore CEQA Checklist Items Deemed Not Significant or Not Applicable to the 2012 WRMP Update are identical to the 2009 WRMP as analyzed by the 2010 PEIR. That information is hereby incorporated by reference (Otay 2010).

4.5 Geology, Soils, and Paleontology

The 2010 PEIR for the 2009 WRMP Update described existing conditions within the planning area with respect to geology and soils, seismicity, and paleontological sensitivity; the potential physical environmental effects (direct, indirect, and/or cumulative) related to these issues resulting from development of projects under the WWMP; and the project design features, standard construction practices, and mitigation/ performance measures to reduce or avoid the identified impacts (Otay 2010).

This section of the SPEIR is intended to supplement the previous information and analysis contained within the corresponding section of the 2010 PEIR. For the analysis of the WWMP, some of the original analysis within the PEIR was not significantly changed and therefore does not need additional analysis/updating. That information is hereby incorporated by reference (Section 4.5.1 – Environmental Setting and 4.5.2 – Regulatory Framework, pp. 4.5-1 to 4.5-12) (Otay 2010).

4.5.1 Environmental Setting

Geology

The construction and operation of the CIP projects identified in the WWMP fall wholly within the Northeast corner of the 2009 WRMP Update area. Therefore existing conditions are identical to the 2009 WRMP as analyzed by the 2010 PEIR. That information is hereby incorporated by reference (Otay 2010).

Soils and Related Hazards

The construction and operation of the CIP projects identified in the WWMP fall wholly within the Northeast corner of the 2009 WRMP Update area. Therefore existing conditions are identical to the 2009 WRMP as analyzed by the 2010 PEIR. That information is hereby incorporated by reference (Otay 2010).

Seismic Hazards

The construction and operation of the CIP projects identified in the WWMP fall wholly within the Northeast corner of the 2009 WRMP Update area. Therefore existing conditions are identical to the 2009 WRMP as analyzed by the 2010 PEIR. That information is hereby incorporated by reference (Otay 2010).

Paleontology

The construction and operation of the CIP projects identified in the WWMP fall wholly within the Northeast corner of the 2009 WRMP Update area. Therefore existing conditions are identical to the 2009 WRMP as analyzed by the 2010 PEIR. That information is hereby incorporated by reference (Otay 2010).

4.5.2 Regulatory Framework

Federal Regulations

The construction and operation of the CIP projects identified in the WWMP fall wholly within the Northeast corner of the 2009 WRMP Update area. Therefore regulations are identical to the 2009 WRMP as analyzed by the 2010 PEIR. That information is hereby incorporated by reference (Otay 2010).

State Regulations

The construction and operation of the CIP projects identified in the WWMP fall wholly within the Northeast corner of the 2009 WRMP Update area. Therefore regulations are identical to the 2009 WRMP as analyzed by the 2010 PEIR. That information is hereby incorporated by reference (Otay 2010).

Local Regulations

The construction and operation of the CIP projects identified in the WWMP fall wholly within the Northeast corner of the 2009 WRMP Update area. Therefore regulations are identical to the 2009 WRMP as analyzed by the 2010 PEIR. That information is hereby incorporated by reference (Otay 2010).

4.5.3 Impacts and Mitigation

Issue 1 – Exposure to Seismic-Related Hazards

Geology, Soils, and Paleontology Issue 1 Summary ***Would implementation of the 2012 WRMP Update expose people or structures to potential substantial adverse effects of a rupture of a known earthquake fault, strong seismic ground shaking, seismic-related ground failure, liquefaction or landslides?***	
Impact: Compliance with UBC and CBC standards and CDMG's Special Publications 117 (Geo-PDF-1), and implementation of recommendations provided in site-specific geotechnical investigations (Geo-SCP-1), would minimize impacts associated with seismic-related ground shaking, ground failure, liquefaction, and landslides.	**Mitigation**: No mitigation is required.
Significance Before Mitigation: Less than significant.	**Significance After Mitigation**: Less than significant.

Impact Analysis

Design and construction of projects associated with the WWMP Projects would be similar to those in the 2009 WRMP Update. They would comply with all applicable PDFs/SCPs and would conduct a pre-construction geotechnical investigation before any work begins. This corresponding section contained within the 2010 PEIR, would not need further analysis or updating. Refer to Section 4.5.3.1, pp. 4.5-13 to 4.3-15 in the 2010 PEIR for impact analysis and required PDFs/SCPs (Otay 2010).

Issue 2 – Soil Erosion or Top Soil Loss

Geology, Soils, and Paleontology Issue 2 Summary ***Would implementation of the 2012 WRMP Update result in substantial soil erosion or the loss of topsoil?***	
Impact: Compliance with UBC and CBC standards (Geo-PDF-1), implementation of recommendations provided in site-specific geotechnical investigations, and implementation of standard erosion control measures (Geo-SCP-2 and Geo-SCP-3) would reduce impacts associated with soil erosion and loss of topsoil.	**Mitigation:** No mitigation is required.
Significance Before Mitigation: Less than significant.	**Significance After Mitigation:** Less than significant.

Impact Analysis

Earth-disturbing activities during construction of WWMP projects would be very similar to those in the 2009 WRMP Update. If erodible soils are found in the project footprint during the pre-construction geotechnical investigation, then PDFs/SCPs comparable to the ones within the 2010 PEIR would be implemented (Otay 2012). In addition to the ones contained with Section 4.5.3.1, an Erosion Control Plan or a Storm Water Pollution Prevention Plan (SWPPP) with associated Best Management Practices (BMPs) would be designed and implemented. After construction is completed, operational activities associated with the WWMP would follow all applicable PDFs/SCPs to ensure minimal impacts to soil erosion or the loss of topsoil. This corresponding section contained within the 2010 PEIR, would not need further analysis or updating. Refer to Section 4.5.3.2, pp. 4.5-15 to 4.3-18 in the 2010 PEIR for impact analysis and required PDFs/SCPs (Otay 2010).

Issue 3 – Geology/Soil Instability

Geology, Soils, and Paleontology Issue 3 Summary	
Would any of the CIP projects under the 2012 WRMP Update be located on a geologic unit or soil that is unstable or that would become unstable and potentially result in landslides, lateral spreading, subsidence, liquefaction, or collapse?	
Impact: Implementation of recommendations provided in site-specific geotechnical investigations (Geo-SCP-1 and Geo-SCP-4) would reduce impacts associated with geologic/soil instability (landslides, lateral spreading, liquefaction/collapse).	**Mitigation**: No mitigation is required.
Significance Before Mitigation: Less than significant.	**Significance After Mitigation:** Less than significant.

Impact Analysis

The WWMP planning area, like many parts of southern California, has a high likelihood of geologic instability. A pre-construction geotechnical investigation would be conducted at the project site to identify any unstable geologic formations or soils before any work has begun (Otay 2012). All potential WWMP Projects would follow all necessary 2010 PEIR PDFs/SCPs to ensure that impacts due to geologic/soil instability would be minimized. This corresponding section contained within the 2010 PEIR, would not need further analysis or updating. Refer to Section 4.5.3.3, pp. 4.5-18 to 4.3-20 in the 2010 PEIR for impact analysis and required PDFs/SCPs (Otay 2010).

Issue 4 – Expansive Soils

Geology, Soils, and Paleontology Issue 4 Summary	
Would any of the CIP projects under the 2012 WRMP Update be located on expansive soils creating substantial risks to life or property?	
Impact: Implementation of recommendations provided in site-specific geotechnical investigations (Geo-SCP-1 and Geo-SCP-4) would reduce impacts associated with expansive soils.	**Mitigation**: No mitigation is required.
Significance Before Mitigation: Less than significant.	**Significance After Mitigation:** Less than significant.

Impact Analysis

The potential for expansive soils exists throughout portions of the WWMP planning area. A pre-construction geotechnical investigation would be conducted to identify any expansive soils before any work has begun (Otay 2010). All potential WWMP Projects would follow all necessary 2010 PEIR PDFs/SCPs to ensure that impacts due to expansive soils would be minimized. This corresponding section contained within the 2010 PEIR, would not need further analysis or updating. Refer to Section 4.5.3.4, pp. 4.5-20 to 4.3-21 in the 2010 PEIR for impact analysis and required PDFs/SCPs (Otay 2010).

Issue 5 – Paleontological Resources

Geology, Soils, and Paleontology Issue 5 Summary ***Would implementation of the 2012 WRMP Update directly or indirectly destroy a unique paleontological resource or site?***	
Impact: Implementation of the 2012 WRMP Update could impact potential paleontological resources within the planning area.	**Mitigation:** Implementation of a paleontological resources monitoring and data recovery program by a qualified paleontologist (Geo-5A through Geo-5D).
Significance Before Mitigation: Significant.	**Significance After Mitigation:** Less than Significant.

Impact Analysis

Figure 4.5-5 in the 2010 PEIR shows that portions of the WWMP planning area are underlain by geologic formations that have the potential to contain fossils (Otay 2010). These formations would only be impacted if WWMP project construction activities require excavation into native soils, rather than fill. With implementation of the mitigation measures within the 2010 PEIR, impacts to potential paleontological resources would be minimized. This corresponding section contained within the 2010 PEIR, would not need further analysis or updating. Refer to Section 4.5.3.5, pp. 4.5-21 to 4.3-22 in the 2010 PEIR for impact analysis and required mitigation measures (Otay 2010).

4.5.4 Cumulative Impacts and Mitigation

Geology, Soils and Paleontology Cumulative Issue Summary

Would implementation of the 2012 WRMP Update have a cumulatively considerable contribution to cumulative geology/soils impacts considering past, present, and probable future projects?

Cumulative Impact	Significant	WRMP Contribution
Localized soil erosion or loss of topsoil in affected watersheds due to development.	Yes	Not cumulatively considerable with implementation of Geo-PDF-1, Geo-SCP-2 and Geo-SCP-3.
Regional loss of paleontological resources.	Yes	Not cumulatively considerable with implementation of mitigation/performance measures Geo-5A through Geo-5D.

Impact Analysis

Comparable to the 2009 WRMP Update, the WWMP would not result in a cumulatively considerable contribution to soil erosion/loss of topsoil, or a loss of paleontological resources within the local

cumulative impact areas if the PDFs/SCPs and mitigation measures are followed. Refer to Section 4.4.5, pp. 4.5-23 to 4.5-24 in the 2010 PEIR for more detailed analysis (Otay 2010).

4.5.5 CEQA Checklist Items Deemed Not Significant or Not Applicable to the 2012 WRMP Update

Like the 2009 WRMP Update, the WWMP would not involve the use of septic tanks or other alternative wastewater disposal systems (Otay 2012); therefore, no further evaluation is necessary. Refer to Section 4.5.5, p. 4.5-24 in the 2010 PEIR for more detailed analysis (Otay 2010).

4.6 Hydrology and Water Quality

The 2010 PEIR for the 2009 WRMP Update described existing conditions within the WRMP planning area with respect to hydrology and water quality; the potential physical environmental effects (direct, indirect, and/or cumulative) related to these issues resulting from development of projects under the WWMP; and the project design features, standard construction practices, and mitigation/performance measures to reduce or avoid the identified impacts (Otay 2010).

This section of the SPEIR is intended to supplement the previous information and analysis contained within the corresponding section of the 2010 PEIR. For the analysis of the WWMP, the original analysis within the PEIR is not significantly changed and therefore does not need additional analysis/updating. That information is hereby incorporated by (Otay 2010).

4.6.1 Environmental Setting

Hydrology

The construction and operation of the CIP projects identified in the WWMP fall wholly within the Northeast corner of the 2009 WRMP Update area. Therefore hydrology is identical to the 2009 WRMP as analyzed by the 2010 PEIR. That information is hereby incorporated by reference (Otay 2010).

Surface Water Quality

The construction and operation of the CIP projects identified in the WWMP fall wholly within the Northeast corner of the 2009 WRMP Update area. Therefore surface water quality is identical to the 2009 WRMP as analyzed by the 2010 PEIR. That information is hereby incorporated by reference (Otay 2010).

Groundwater

The construction and operation of the CIP projects identified in the WWMP fall wholly within the Northeast corner of the 2009 WRMP Update area. Therefore groundwater conditions are identical to the 2009 WRMP as analyzed by the 2010 PEIR. That information is hereby incorporated by reference (Otay 2010).

4.6.2 Regulatory Framework

Federal

The construction and operation of the CIP projects identified in the WWMP fall wholly within the Northeast corner of the 2009 WRMP Update area. Therefore the regulations are identical to the 2009 WRMP as analyzed by the 2010 PEIR. That information is hereby incorporated by reference (Otay 2010).

State

The construction and operation of the CIP projects identified in the WWMP fall wholly within the Northeast corner of the 2009 WRMP Update area. Therefore the regulations are identical to the 2009 WRMP as analyzed by the 2010 PEIR. That information is hereby incorporated by reference (Otay 2010).

Local

The construction and operation of the CIP projects identified in the WWMP fall wholly within the

Northeast corner of the 2009 WRMP Update area. Therefore the regulations are identical to the 2009 WRMP as analyzed by the 2010 PEIR. That information is hereby incorporated by reference (Otay 2010).

4.6.3 Impacts and Mitigation

Issue 1 – Water Quality

Hydrology and Water Quality Issue 1 Summary	
Would the 2012 WRMP Update violate any water quality standards or waste discharge requirements, or otherwise substantially degrade water quality?	
Impact: Implementation of standard erosion control measures (Geo-SCP-2 and Geo-SCP-3), construction-related safety plans (Hyd-SCP-1), and OWD HMBPs for CIP operations (Hyd-PDF-1) would reduce impacts associated with potential violation of water quality standards or waste discharge requirements, and potential water quality degradation resulting from construction and operation of CIP projects under the 2012 WRMP Update.	**Impact:** Implementation of standard erosion control measures (Geo-SCP-2 and Geo-SCP-3), construction-related safety plans (Hyd-SCP-1), and OWD HMBPs for CIP operations (Hyd-PDF-1) would reduce impacts associated with potential violation of water quality standards or waste discharge requirements, and potential water quality degradation resulting from construction and operation of CIP projects under the 2012 WRMP Update.
Significance Before Mitigation: Less than significant.	**Significance Before Mitigation:** Less than significant.

Impact Analysis

The construction and operation of the CIP projects identified in the WWMP fall wholly within the Northeast corner of the 2009 WRMP Update area. Therefore the water quality is identical to the 2009 WRMP as analyzed by the 2010 PEIR. That information is hereby incorporated by reference (Otay 2010).

Issue 2 – Groundwater Quality, Supplies, and Recharge

Hydrology and Water Quality Issue 2 Summary	
Would the 2012 WRMP Update substantially degrade groundwater quality, or interfere substantially with groundwater supplies or recharge such that there would be a net deficit in aquifer volume or a lowering of the local groundwater table?	
Impact: Implementation of standard erosion control measures (Geo-SCP-2 and Geo-SCP-3), construction- related safety plans (Hyd-SCP-1), and OWD HMBPs for CIP operations (Hyd-PDF-1) would reduce potential groundwater quality impacts due to storm water runoff pollution associated with construction and long-term operations at WMMP CIP projects. In addition, there would be no impacts to groundwater supplies and recharge from implementation of the CIP projects under the 2012 WRMP Update.	**Mitigation:** No mitigation is required.
Significance Before Mitigation: Less than significant.	**Significance After Mitigation:** Less than significant.

Impact Analysis

The construction and operation of the CIP projects identified in the WWMP fall wholly within the Northeast corner of the 2009 WRMP Update area. Therefore the water quality is identical to the 2009 WRMP as analyzed by the 2010 PEIR. That information is hereby incorporated by reference (Otay 2010).

Issue 3 – Alteration of Drainage Patterns

Hydrology and Water Quality Issue 3 Summary	
Would the 2012 WRMP Update substantially alter existing drainage patterns, including the alteration of the course of a stream or river, or substantially increase the rate or amount of surface runoff in a manner which would provide substantial additional sources of polluted runoff (including erosion/siltation); result in flooding (and exposure of people or structures to a significant risk of loss, injury or death); or exceed the capacity of storm water drainage systems?	
Impact: Implementation of standard erosion control measures (Geo-SCP-2 and Geo-SCP-3), construction-related safety plans (Hyd-SCP-1), OWD HMBPs for CIP operations (Hyd-PDF-1), and appropriately sized drainage facilities (Hyd-PDF-2) would reduce impacts from potential storm water runoff pollution (including erosion/siltation), flooding, and exceedance of capacity of storm water drainage facilities due to alteration of localized drainage patterns associated with construction, development and long-term operations of CIP projects under the 2012 WRMP Update.	**Mitigation:** No mitigation is required.
Significance Before Mitigation: Less than significant.	**Significance After Mitigation:** Less than significant.

Impact Analysis

The construction and operation of the CIP projects identified in the WWMP fall wholly within the Northeast corner of the 2009 WRMP Update area. Therefore the water quality is identical to the 2009 WRMP as analyzed by the 2010 PEIR. That information is hereby incorporated by reference (Otay 2010).

Issue 4 – Mudflows

Hydrology and Water Quality Issue 4 Summary	
Would any of the CIP projects under the 2012 WRMP Update have the potential to be inundated by mudflow?	
Impact: Implementation of recommendations provided in site-specific geotechnical investigations (Geo-SCP-1), would reduce potential impacts associated with mudflows.	**Mitigation:** No mitigation is required.
Significance Before Mitigation: Less than significant.	**Significance After Mitigation:** Less than significant.

Impact Analysis

The construction and operation of the CIP projects identified in the WWMP fall wholly within the Northeast corner of the 2009 WRMP Update area. Therefore the water quality is identical to the 2009 WRMP as analyzed by the 2010 PEIR. That information is hereby incorporated by reference (Otay 2010).

4.6.4 Cumulative Impacts and Mitigation

Hydrology and Water Quality Cumulative Issue Summary

Would implementation of the 2012 WRMP Update have a cumulatively considerable contribution to a cumulative hydrology and water quality impact considering past, present, and probable future projects?

Cumulative Impact	Significant	WRMP Contribution
Regional increase in pollutant sources that could adversely affect water quality standards.	Yes	Not cumulatively considerable with implementation of Geo-PDF-1, Geo-SCP-2, Geo-SCP-3, Hyd-SCP-1, and Hyd-PDF-1.
Localized impacts to groundwater quality and supplies/recharge.	Yes	Not cumulatively considerable with implementation of Geo-PDF-1, Geo-SCP-2, Geo-SCP-3, Hyd-SCP-1, and Hyd-PDF-1.
Regional impacts to surface and groundwater quality, groundwater supplies/recharge, flooding, and exceedance of capacity of storm water drainage facilities due to alteration of localized drainage patterns.	Yes	Not cumulatively considerable with implementation of Geo-PDF-1, Geo-SCP-2, Geo-SCP-3, Hyd-SCP-1, Hyd-PDF-1, and Hyd-PDF-2.

Impact Analysis

The construction and operation of the CIP projects identified in the WWMP fall wholly within the Northeast corner of the 2009 WRMP Update area. Therefore the energy usage is identical to the 2009 WRMP as analyzed by the 2010 PEIR. That information is hereby incorporated by reference (Otay 2010).

4.6.5 CEQA Checklist Items Deemed Not Significant or Not Applicable to the 2012 WRMP Update

The construction and operation of the CIP projects identified in the WWMP fall wholly within the Northeast corner of the 2009 WRMP Update area. Therefore CEQA Checklist Items Deemed Not Significant or Not Applicable to the 2012 WRMP Update are identical to the 2009 WRMP as analyzed by the 2010 PEIR. That information is hereby incorporated by reference (Otay 2010).

4.7 Landform Alteration and Visual Aesthetics

The 2010 PEIR for the 2009 WRMP Update described existing conditions within the WRMP planning area with respect to landform alteration and visual aesthetics; the potential physical environmental effects (direct, indirect, and/or cumulative) related to these issues resulting from development of projects under the WWMP; and the project design features, standard construction practices, and mitigation/performance measures to reduce or avoid the identified impacts (Otay 2010). Potential indirect impacts of night lighting to biological resources were discussed in Section 4.2 (Biological Resources) of the PEIR and in this SPEIR.

This section of the SPEIR is intended to supplement the previous information and analysis contained within the corresponding section of the 2010 PEIR. For the analysis of the WWMP, some of the original analysis within the PEIR was not significantly changed and therefore does not need additional analysis/updating. That information is hereby incorporated by reference (Section 4.7.1 – Environmental Setting and 4.7.2 – Regulatory Framework, pp. 4.7-1 to 4.7-5) (Otay 2010).

4.7.1 Environmental Setting

North District

Hillsdale System

The construction and operation of the CIP projects identified in the WWMP fall wholly within this area of the 2009 WRMP Update area. Therefore existing conditions are identical to the 2009 WRMP as analyzed by the 2010 PEIR. That information is hereby incorporated by reference (Otay 2010).

4.7.2 Regulatory Framework

Federal and State Regulations

The construction and operation of the CIP projects identified in the WWMP fall wholly within the Northeast corner of the 2009 WRMP Update area. Therefore the regulations are identical to the 2009 WRMP as analyzed by the 2010 PEIR. That information is hereby incorporated by reference (Otay 2010).

Local Policies and Ordinances

The construction and operation of the CIP projects identified in the WWMP fall wholly within the Northeast corner of the 2009 WRMP Update area. Therefore the regulations are identical to the 2009 WRMP as analyzed by the 2010 PEIR. That information is hereby incorporated by reference (Otay 2010).

4.7.3 Impacts and Mitigation

Issue 1 – Scenic Vistas

Aesthetics Issue 1 Summary	
Would any of the CIP projects under the 2012 WRMP Update have a substantial adverse effect on a scenic vista?	
Impact: Implementation of AesPDF-1 would reduce the visual impacts of WMMP CIP Projects on scenic vistas.	**Mitigation:** No mitigation is required.
Significance Before Mitigation: Less than significant.	**Significance After Mitigation:** Less than significant

Impact Analysis

Impacts for the 2012 WRMP Update CIP projects were determined to be less than significant after implementation of the PDF (Otay 2010). It is unlikely if any of the projects under the WWMP would have any substantial adverse effect to scenic vistas; however, all projects would follow the same PDF. This corresponding section contained within the 2010 PEIR, would not need further analysis or updating. Refer to Section 4.7.3.1, pp. 4.7-6 to 4.7-10 in the 2010 PEIR for impact analysis and required PDF (Otay 2010).

Issue 2 – Visual Character and Quality

Aesthetics Issue 2 Summary	
Would any of the CIP projects under the 2012 WRMP Update substantially degrade the existing visual character or quality of the project sites and their surroundings?	
Impact: Implementation of OWD's standard requirements for landscaping and using natural color palettes for building materials (AesPDF-1) would ensure that the CIP projects would not degrade the existing visual character of the project sites and their surroundings.	**Mitigation:** No mitigation is required.
Significance Before Mitigation: Less than significant.	**Significance After Mitigation:** Less than significant.

Impact Analysis

Similar to CIP projects under the 2009 WRMP Update, projects associated with the WWMP would all have visual impacts due to site disturbance and construction. However, these impacts would be temporary with implementation of the required PDF after construction is completed. Complying with the required PDF and any subsequent mitigation measures from future project-specific CEQA documents would reduce any visual impacts to a level of less than significance. This corresponding section contained within the 2010 PEIR, would not need further analysis or updating. Refer to Section 4.7.3.2, pp. 4.7-11 to 4.7-14 in the 2010 PEIR for impact analysis and required PDF (Otay 2010).

Issue 3 – Lighting and Glare

Aesthetics Issue 3 Summary	
Would any of the CIP projects under the 2012 WRMP Update create a new source of substantial light or glare which would adversely affect day or nighttime views in the immediate vicinity of the CIP projects?	
Impact: Implementation of Aes-PDF-1 would reduce the impact of new sources of substantial light or glare in association with CIP projects which could adversely affect day and nighttime views nearby.	**Mitigation:** No mitigation is required.
Significance Before Mitigation: Less than significant.	**Significance After Mitigation:** Less than significant.

Impact Analysis

Expansion of current existing facilities under the WWMP, such as the RWCWRF, would create a new source of light/glare (Otay 2012). These impacts are no different to impacts from light/glare of CIP

projects previously discussed within the 2010 PEIR. WWMP projects would conform to the required PDF to reduce impacts to a level of less than significance. This corresponding section contained within the 2010 PEIR, would not need further analysis or updating. Refer to Section 4.7.3.3, pp. 4.7-15 in the 2010 PEIR for impact analysis and required PDF (Otay 2010).

4.7.4 Cumulative Impacts and Mitigation

Aesthetics Cumulative Issue Summary

Would implementation of the 2012 WRMP Update have a cumulatively considerable contribution to a cumulative aesthetic impact considering past, present, and probable future projects?

Cumulative Impact	Significant	WRMP Contribution
Local degradation of scenic vistas.	Yes	Not cumulatively considerable with implementation of AesPDF-1.
Local degradation of visual character.	Yes	Not cumulatively considerable with implementation of AesPDF-1.

Impact Analysis

In contrast to the 2009 WRMP Update, it is presumed that the WWMP would not result in any cumulatively significant impacts to scenic vistas and visual character/quality, even before compliance with the required PDFs. The only potential new buildings associated with the WWMP, would be the expansion of the existing RWCWRF (Otay 2012). Any impacts from light/glare are considered localized and is not addressed in this section. Refer to Section 4.7.4, pp. 4.7-16 to 4.3-17 in the 2010 PEIR for more detailed analysis (Otay 2010).

4.7.5 CEQA Checklist Items Deemed Not Significant or Not Applicable to the 2012 WRMP Update

Would implementation of any projects under the WWMP substantially damage scenic resources, including, but not limited to, trees, rock outcroppings, and historic buildings within a State scenic highway?

No officially designated State scenic highways occur within the planning area. Implementation of the WWMP will not change previous impact analysis of the 2010 PEIR for the 2009 WRMP Update, which stated that there would be no impact to any scenic resources. Refer to Section 4.7.5, p. 4.7-17 in the 2010 PEIR for further analysis (Otay 2010).

4.8 Land Use and Planning

The 2010 PEIR for the 2009 WRMP Update described existing conditions within the WRMP planning area with respect to land use and planning. In addition, potential physical environmental effects (direct, indirect, and/or cumulative) related to these issues resulting from development projects under the WWMP, project design features, standard construction practices, and mitigation/performance measures to reduce or avoid the identified impacts are described (Otay 2010).

This section of the SPEIR is intended to supplement the previous information and analysis contained within the corresponding section of the 2010 PEIR. For the analysis of the WWMP, some of the original analysis within the PEIR was not significantly changed and therefore does not need additional analysis/updating. That information is hereby incorporated by reference (Section 4.8.1 – Existing Land Uses and 4.8.2 – Regulatory Framework, pp. 4.8-1 to 4.8-8) (Otay 2010).

4.8.1 Environmental Setting

Existing Conditions

The construction and operation of the CIP projects identified in the WWMP fall wholly within the Northeast corner of the 2009 WRMP Update area. Therefore existing conditions are identical to the 2009 WRMP as analyzed by the 2010 PEIR. That information is hereby incorporated by reference (Otay 2010).

4.8.2 Regulatory Framework

State

The construction and operation of the CIP projects identified in the WWMP fall wholly within the Northeast corner of the 2009 WRMP Update area. Therefore the regulations are identical to the 2009 WRMP as analyzed by the 2010 PEIR. That information is hereby incorporated by reference (Otay 2010).

Local

The construction and operation of the CIP projects identified in the WWMP fall wholly within the Northeast corner of the 2009 WRMP Update area. Therefore the regulations are identical to the 2009 WRMP as analyzed by the 2010 PEIR. That information is hereby incorporated by reference (Otay 2010).

4.8.3 Impacts and Mitigation

Issue 1 – Conflicts with Habitat Conservation and Natural Communities Conservation Plans

Land Use Issue 1 Summary ***Would the 2012 WRMP Update conflict with any applicable habitat conservation plan (HCP) or natural communities conservation plan (NCCP)?***	
Impact: Design of CIP projects incorporating MSCP land use adjacency guidelines of the County of San Diego (LU- PDF-1), City of San Diego (LU-PDF-2), and City of Chula Vista MSCP (LU-PDF-3), compliance with exterior noise limits (Noi-PDF-1), and pre-construction surveys (Bio-1C) would reduce indirect impacts to biological resources that would otherwise conflict with applicable HCPs and NCCPs.	**Mitigation:** No mitigation is required.

Significance Before Mitigation: Less than significant.	**Significance After Mitigation:** Less than significant.

Impact Analysis

It is not currently known if any of the associated projects under the WWMP would be located in or adjacent to lands under a Habitat Conservation Plan (HCP), a Natural Communities Conservation Plan (NCCP), or a Multiple Species Conservation Plan (MSCP) (Otay 2012). If however, a project is placed in, near or adjacent to a known habitat preserve area, it shall follow all applicable PDFs and mitigation measures from the 2010 PEIR for the 2009 WRMP Update. These would ensure that all respective land use agency guidelines of the County of San Diego, City of San Diego, and the City of Chula Vista pertaining to HCPs, NCCPs, and MSCPs are incorporated into the project design (Otay 2010). Implementing these PDFs and mitigation measures would reduce any potential impacts to natural communities to a level of less that significant (Otay 2010).

4.8.4 Cumulative Impacts and Mitigation

Land Use and Planning Cumulative Issue Summary

Would implementation of the 2012 WRMP Update have a cumulatively considerable contribution to a cumulative land use and planning impact considering past, present, and probable future projects?

Cumulative Impact	Significant	WRMP Contribution
Conflicts with regional HCPs/NCCPs, in terms of indirect impacts to biological resources in MSCP reserves.	Yes	Not cumulatively considerable with implementation of LU-PDF-1, LU-PDF-2, LU-PDF-3, and LU-SCP-1.

Impact Analysis

The construction and operation of the CIP projects identified in the WWMP fall wholly within the Northeast corner of the 2009 WRMP Update area. Therefore the cumulative impacts and mitigation are identical to the 2009 WRMP as analyzed by the 2010 PEIR. That information is hereby incorporated by reference (Otay 2010). Cumulative impacts are evaluated for environmental issues for which the impacts associated with implementation of the WWMP would be significant or less than significant. Since implementation of the 2012 WRMP Update would not physically divide an established community or conflict with any land use plan, policy or regulation of the County of San Diego, the City of San Diego, or the City of Chula Vista, these issues are not addressed in this section.

Comparable to the 2009 WRMP Update, land disturbances and the construction of projects associated with the WWMP may result in impacts to biological resources in or adjacent to protected natural communities, such as HCPs or MSCPs (e.g., from downstream siltation, stormwater runoff, lighting, noises). For these reasons, the cumulative impact to natural communities from the implementation of the WWMP could be significant; however, if the above mentioned PDFs and mitigation measures (from the 2010 PEIR) are followed then any WWMP projects would not result in regionally cumulative impacts. Refer to Section 4.8.4, pp. 4.8-10 to 4.8-11 in the 2010 PEIR for more detailed analysis (Otay 2010).

4.8.5 CEQA Checklist Items Deemed Not Significant or Not Applicable to the 2012 WWMP Supplement

Would implementation of any of the projects under the WWMP physically divide an established

community?

The WWMP is not anticipated to create a physical divide between established communities as the pipes associated with the plan are anticipated to be buried underground and the plants are not anticipated to be large enough as to create a divide.

Would implementation of the WWMP conflict with any land use plan, policy or regulation of an agency with jurisdiction over the project (including, but not limited to the general plan, specific plan, local coastal program, or zoning ordinance) adopted for the purpose of avoiding or mitigating an environmental effect?

Subsections (d) and (e) within Section 53901 of the California Government Code state that local agency zoning ordinances (and by inference the planning policies of local land use agencies) do not apply to the location or construction of facilities for the production, generation, storage, treatment, or transmission of water. Therefore, implementation of the WWMP would not conflict with any land use plan, policy, or regulation of the County of San Diego, the City of San Diego, or the City of Chula Vista. Furthermore, as outlined in Section 4.8.2.2 above, there are many policies within these agency general plans that support the provision of water infrastructure. Therefore, no further analysis is required.

4.9 Noise

The 2010 PEIR for the 2009 WRMP Update described existing conditions within the planning area with respect to noise; the potential physical environmental effects (direct, indirect, and/or cumulative) related to these issues resulting from development projects under the WWMP; and the project design features, standard construction practices, and mitigation/performance measures to reduce or avoid the identified impacts. Refer to Section 4.2 (Biological Resources) of this SPEIR for a discussion of potential noise impacts associated with noise-sensitive avian species (Otay 2010).

This section of the SPEIR is intended to supplement the previous information and analysis contained within the corresponding section of the 2010 PEIR. For the analysis of the WWMP, some of the original analysis within the PEIR was not significantly changed and therefore does not need additional analysis/updating. That information is hereby incorporated by reference (Section 4.9.1 – Environmental Setting and 4.9.2 – Regulatory Framework, pp. 4.9-1 to 4.9-8) (Otay 2010).

4.9.1 Environmental Setting

The construction and operation of the CIP projects identified in the WWMP fall wholly within the Northeast corner of the 2009 WRMP Update area. Therefore the environmental setting with respect to noise is identical to the 2012 WRMP as analyzed by the 2010 PEIR. That information is hereby incorporated by reference (Otay 2010).

4.9.2 Regulatory Framework

Federal

The construction and operation of the CIP projects identified in the WWMP fall wholly within the Northeast corner of the 2009 WRMP Update area. Therefore the regulations are identical to the 2009 WRMP as analyzed by the 2010 PEIR. That information is hereby incorporated by reference (Otay 2010).

State

The construction and operation of the CIP projects identified in the WWMP fall wholly within the Northeast corner of the 2009 WRMP Update area. Therefore the regulations are identical to the 2009 WRMP as analyzed by the 2010 PEIR. That information is hereby incorporated by reference (Otay 2010).

Local

The construction and operation of the CIP projects identified in the WWMP fall wholly within the Northeast corner of the 2009 WRMP Update area. Therefore the regulations are identical to the 2009 WRMP as analyzed by the 2010 PEIR. That information is hereby incorporated by reference (Otay 2010).

4.9.3 Impacts and Mitigation

Issue 1 – Substantial Permanent Increases in Ambient Noise Levels

Noise Issue 1 Summary	
Would implementation of the 2012 WRMP Update result in a substantial permanent increase in ambient noise levels or expose persons to noise in excess of standards?	
Impact: Implementation of project design feature Noi-PDF-1 would reduce potential operational noise sources from CIP pump stations and water supply projects to the noise level limits established by the applicable jurisdictions.	**Mitigation:** No mitigation is required.
Significance Before Mitigation: Less than significant.	**Significance After Mitigation:** Less than significant.

Impact Analysis

The 2009 WRMP Update dealt with CIP projects, such as pump stations, which are a significant source of long-term noise (Otay 2010). A potential project under the WWMP that could be a source of substantial permanent increases in noise levels is the expansion of the RWCWRF to meet the District's increased wastewater demands (Otay 2012). The current RWCWRF represents a significant source of noise to the surrounding area with pumps, machinery, and associated worker vehicle trips.

An expansion of this wastewater facility has the potential to be an even more significant source of operational noise; however, with implementation of the Noi-PDF-1 from the 2010 PEIR, this would ensure that exterior noise levels from the facility are not above jurisdictional thresholds to the surrounding land uses (Otay 2010). Another potential permanent noise source could come in the form of increased worker daily trips due to an expanded facility needing more workers. It is not known at this time if an expansion of the RWCWRF would need more workers. If it did, it is likely that workers would work on staggered work schedules, thus reducing any increase in traffic noise. Any impacts due to the amount of worker trips necessary with an upgraded treatment plant would be analyzed if the plant is upgraded, but would expect to be such a negligible impact, that it is not considered significant.

With the use of Noi-PDF-1 from the 2010 PEIR and other associated measures, impacts from substantial permanent increases in ambient noise levels would be less than significant. Refer to Section 4.9.3.1, pp. 4.9-8 to 4.9-11 in the 2010 PEIR for more detailed analysis (Otay 2010).

Issue 2 – Temporary Increases in Ambient Noise

Noise Issue 2 Summary	
Would implementation of the 2012 WRMP Update result in a substantial temporary or periodic increase in ambient noise levels in the project vicinity?	
Impact: Although construction of CIP projects would temporarily increase ambient noise levels in the project vicinity, Noi-SCP-1 would ensure compliance with applicable local noise ordinances and regulations, and Noi-SCP-2 would require implementation of the OWD Standard Specifications for Explosives and Blasting. Implementation of these SCPs would reduce impacts associated with temporary increases in ambient noise.	**Mitigation:** No mitigation is required.
Significance Before Mitigation: Less than significant.	**Significance After Mitigation:** Less than significant.

Impact Analysis

Like the projects associated with the 2009 WRMP Update, many planned projects within the WWMP would result in temporary increases in ambient noise levels due to construction. Construction activities associated with WWMP projects would also be very similar to the construction of the projects within the 2009 WRMP Update, except that it is unlikely that any WWMP projects would require blasting as a means of construction (Otay 2010; 2012). At this time though, many projects and features of the WWMP are still in the design phase, and information regarding the specific number and type of construction equipment required and duration is still unknown. Therefore, it is unknown whether or not construction for the WWMP (individually or collectively) would exceed the noise levels established by applicable noise ordinances. With implementation of the Noi-SCP-1 contained within the 2010 PEIR, temporary noise impacts from construction would be less than significant. Refer to Section 4.9.3.2, pp. 4.9-11 to 4.9-13 in the 2010 PEIR for further detailed impact analysis and the required SCP (Otay 2010).

Issue 3 – Excessive Groundborne Vibration or Noise

Noise Issue 4 Summary	
Would implementation of the 2012 WRMP Update result in the exposure of persons to or generation of excessive groundborne vibration or groundborne noise levels?	
Impact: Construction of CIP projects may temporarily result in excessive groundborne vibration and noise that may affect surrounding land uses. However, implementation of the OWD Standard Specifications for Explosives and Blasting (Noi-SCP-2) would reduce groundborne vibration from construction activities~~.~~	**Mitigation:** No mitigation is required.
Significance Before Mitigation: Less than significant.	**Significance After Mitigation:** Less than significant.

Impact Analysis

The construction of projects associated with the WWMP, like the projects associated with the 2009 WRMP Update, could result in temporary sources of vibration to surrounding land uses. One difference between the two is that it is unlikely for any WWMP projects to require blasting as a method of construction. The projects under the WWMP will follow all necessary SCPs contained within the 2010 PEIR to ensure that impacts from groundborne vibration or noise are minimized. This corresponding section contained within the 2010 PEIR, would not need further analysis or updating. Refer to Section 4.9.3.3, pp. 4.9-14 to 4.9-15 in the 2010 PEIR for impact analysis and required PDF (Otay 2010).

4.9.4 Cumulative Impacts and Mitigation

Energy Cumulative Issue Summary		
Would implementation of the 2012 WRMP Update have a cumulatively considerable contribution to the inefficient, wasteful, and unnecessary use of energy considering past, present, and probable future projects?		
Cumulative Impact	**Significant**	**WRMP Contribution**
Energy Consumption	No	Not cumulatively considerable with implementation of measures Ene-PDF-1 through Ene-PDF-4.

Impact Analysis

Noise by definition is a localized phenomenon, and decreases in magnitude as distance from the source increases.

As discussed in the previous sections, the projects associated with the WWMP, such as the expansion of the RWCWRF could potentially be a source of substantial permanent noise. However, following the recommended Noi-PDF-1 contained within the original 2010 PEIR (see Section 4.9.3.1 above) would reduce any potential substantial permanent ambient noise increase impacts to surrounding land uses and not be locally cumulatively significant. Another potential permanent noise source could come in the form of increased worker daily trips due to an expanded facility needing more workers. As discussed previously in Section 4.9.3.1, the amount of worker trips necessary with an upgraded treatment plant would be analyzed to determine if there is an impact, but would likely be such a negligible impact, that it would not be considered locally cumulatively significant either. Refer to Section 4.9.4.1, pp. 4.9-15 to 4.9-16 in the 2010 PEIR for more detailed cumulative impact analysis and required PDFs/SCPS (Otay 2010).

As mentioned previously in Section 4.9.3.2, temporary increases in ambient noise would likely occur as a result of WWMP project construction. But with implementation of the Noi-SCP-1 contained within the 2010 PEIR, temporary noise impacts from construction would be less than significant and would thus not be locally cumulatively significant either. Refer to Section 4.9.4.1, pp. 4.9-14 to 4.9-15 in the 2010 PEIR for more detailed cumulative impact analysis and required PDFs/SCPs (Otay 2010).

As mentioned previously in Section 4.9.3.3, the construction of projects associated with the WWMP, could result in temporary sources of vibration to surrounding land uses. These projects will follow all necessary SCPs contained within the 2010 PEIR to ensure that impacts from groundborne vibration or noise are minimized. Following the recommendations of the SCPs, would also ensure that impacts due to groundborne vibration would not be locally cumulatively significant. Refer to Section 4.9.4.2, pp. 4.9-16 in the 2010 PEIR for more detailed cumulative impact analysis and required PDFs/SCPs (Otay 2010).

4.9.5 CEQA Checklist Items Deemed Not Significant or Not Applicable to the 2012 WRMP Update

Would implementation of WWMP expose people residing or working in the project area to excessive noise levels resulting from aircraft?

The planning area is located within two miles of one public airport and one private airstrip. The planning area is subject to periodic aircraft and helicopter flyovers from regional airports, however, the projects under the WWMP do not contain any residential housing. Therefore, no impact would occur, and no further analysis is required.

4.10 Public Safety

This section of the SPEIR for the 2012 WRMP Update describes existing conditions within the planning area with respect to public safety; the potential physical environmental effects (direct, indirect, and/or cumulative) related to this issue resulting from development of CIP projects under the 2012 WRMP Update; and the project design features, standard construction practices, and mitigation/performance measures to reduce or avoid the identified impacts.

4.10.1 Environmental Setting

The construction and operation of the CIP projects identified in the WWMP fall wholly within the Northeast corner of the 2009 WRMP Update area. Therefore the environmental setting is identical to the 2009 WRMP as analyzed by the 2010 PEIR. That information is hereby incorporated by reference (Otay 2010).

4.10.2 Regulatory Framework

Federal

The construction and operation of the CIP projects identified in the of the WWMP fall wholly within the Northeast corner of the 2009 WRMP Update area. Therefore the regulations are identical to the 2009 WRMP as analyzed by the 2010 PEIR. That information is hereby incorporated by reference (Otay 2010).

State

The construction and operation of the CIP projects identified in the WWMP fall wholly within the Northeast corner of the 2009 WRMP Update area. Therefore the regulations are identical to the 2009 WRMP as analyzed by the 2010 PEIR. That information is hereby incorporated by reference (Otay 2010).

Local

The construction and operation of the CIP projects identified in the WWMP fall wholly within the Northeast corner of the 2009 WRMP Update area. Therefore the regulations are identical to the 2009 WRMP as analyzed by the 2010 PEIR. That information is hereby incorporated by reference (Otay 2010).

4.10.3 Impacts and Mitigation

Issue 1 – Transport, Use, and Disposal of Hazardous Materials and Accidental Releases

Hazards and Hazardous Materials Issue 1 Summary
Would implementation of the 2012 WRMP Update result in a significant hazard to the public or the environment through the transport, use or disposal of hazardous materials; through reasonably foreseeable upset and accident conditions involving the likely release of hazardous materials into the environment; or through hazardous emissions within one-quarter mile of an existing or proposed school?

Impact: Implementation of a Hazardous Materials Business Plan (Haz-SCP-1 and Haz-PDF-1) would reduce hazards to the public or the environment through transportation, use, and disposal of hazardous materials resulting from CIP construction and operations under the 2012 WRMP Update, and associated accidental releases of hazardous materials into the environment and near schools.	**Mitigation:** No mitigation is required.
Significance Before Mitigation: Less than significant.	**Significance After Mitigation:** Less than significant.

Impact Analysis

The construction and operation of the CIP projects identified in the WWMP fall wholly within the Northeast corner of the 2009 WRMP Update area. Therefore the impacts and mitigation are identical to the 2009 WRMP as analyzed by the 2010 PEIR. That information is hereby incorporated by reference (Otay 2010).

Issue 2–Listed Hazardous Materials Sites

Hazards and Hazardous Materials Issue 2 Summary ***Would implementation of the 2012 WRMP Update result in activities located on a listed hazardous materials site creating a significant hazard to the public or environment?***	
Impact: CIP construction activities could be located on or near listed hazardous materials sites resulting in a significant hazard to the public or the environment.	**Mitigation:** A Remediation Plan shall be implemented if contaminated soils or groundwater is encountered during CIP construction activities (Haz-2A).
Significance Before Mitigation: Potentially significant.	**Significance After Mitigation:** Less than significant.

Impact Analysis

The construction and operation of the CIP projects identified in the WWMP fall wholly within the Northeast corner of the 2009 WRMP Update area. Therefore the impacts and mitigation are identical to the 2009 WRMP as analyzed by the 2010 PEIR. That information is hereby incorporated by reference (Otay 2010).

Issue 3 – Emergency Response and Evacuation Plans

Hazards and Hazardous Materials Issue 3 Summary ***Would implementation of the 2012 WRMP Update impair implementation of or physically interfere with an adopted emergency response plan or emergency evacuation plan?***	
Impact: Implementation of a traffic control plan (Haz-SCP-2) would reduce impacts associated with temporary, construction-related lane and road closures or detours and their potential impairment or interference with adopted emergency response and evacuation plans.	**Mitigation:** No mitigation is required.
Significance Before Mitigation: Less than significant.	**Significance After Mitigation:** Less than significant.

Impact Analysis

The construction and operation of the CIP projects identified in the WWMP fall wholly within the Northeast corner of the 2009 WRMP Update area. Therefore the impacts and mitigation are identical to the 2009 WRMP as analyzed by the 2010 PEIR. That information is hereby incorporated by reference (Otay 2010).

4.10.4 Cumulative Impacts And Mitigation

Public Safety Cumulative Issue Summary

Would implementation of the 2012 WRMP Update have a cumulatively considerable contribution to cumulative public safety impacts considering past, present, and probable future projects?

Cumulative Impact	Significant	WRMP Contribution
Transport, use, and disposal of hazardous materials and accidental releases into the environment and near schools.	Yes	Not cumulatively considerable with implementation of Haz-SCP-1 and Haz-PDF-1.

Impact Analysis

The construction and operation of the CIP projects identified in the WWMP fall wholly within the Northeast corner of the 2009 WRMP Update area. Therefore the impacts and mitigation are identical to the 2009 WRMP as analyzed by the 2010 PEIR. That information is hereby incorporated by reference (Otay 2010).

4.10.5 CEQA Checklist Items Deemed Not Significant Or Not Applicable to the 2012 WRMP Update

The construction and operation of the CIP projects identified in the WWMP fall wholly within the Northeast corner of the 2009 WRMP Update area. Therefore CEQA Checklist Items Deemed Not Significant or Not Applicable to the 2012 WRMP Update are identical to the 2009 WRMP as analyzed by the 2010 PEIR. That information is hereby incorporated by reference (Otay 2010).

CHAPTER 5.0
OTHER CEQA CONSIDERATIONS

CEQA Guidelines Section 15128 requires that an EIR disclose the reasons why various possible environmental effects of a proposed project are found not to be significant and, therefore, are not discussed in detail in the EIR. Environmental issues found to have potentially significant impacts are addressed in Chapter 4 of this SPEIR. Chapter 4 also discusses issues that were found to have no potential for a significant impact under the subsections titled "CEQA Checklist Items Found Not to be Significant or Deemed Not Applicable to the 2012 WRMP Update" found at the end of each topical section. However, several issues that were found to have no potential for a significant impact or are not applicable to the 2012 WRMP Update did not fall under the topics analyzed in Chapter 4, and are therefore discussed in Sections 5.1 and 5.2 below.

Section 15126 of the CEQA Guidelines requires that all aspects of a project be considered when evaluating its impact on the environment, including planning, acquisition, development, and operation. As part of this analysis, the following three issues are also addressed in this chapter:

- Growth-inducing impacts (Section 5.3);
- Significant environmental effects that cannot be avoided upon implementation of the 2012 WRMP Update (Section 5.4); and
- Significant irreversible environmental effects associated with implementation of the 2012 WRMP Update (Section 5.5).

5.1 Effects Found Not To Be Significant

Implementation of the 2012 WRMP Update would not result in significant impacts to agricultural resources, mineral resources, and transportation and traffic, as discussed below and, therefore, further analysis in this SPEIR is not necessary.

5.1.1 Agricultural Resources

Would implementation of the 2012 WRMP Update convert Prime Farmland, Unique Farmland, or Farmland of Statewide Importance (Farmland), as shown on the maps prepared pursuant to the Farmland Mapping and Monitoring Program of the California Resources Agency, to non-agricultural use?

According to the Important Farmland Map of Western San Diego County (California Resources Agency 2008), none of the CIP projects under the 2012 WRMP Update would be on land designated Prime Farmland, Unique Farmland, or Farmland of Statewide Importance. Therefore, no impacts to agricultural resources would occur as a result of implementation of the 2012 WRMP Update, and no further analysis is required.

Would implementation of the 2012 WRMP Update conflict with existing zoning for agricultural use, or a Williamson Act contract?

According to the California Department of Conservation, Division of Land Resource Protection, there are no portions of the planning area that are within or adjacent to a Williamson Act contract. Furthermore, pursuant to Section 53901 of the California Government Code, local agency zoning ordinances do not

apply to the location or construction of facilities for the production, generation, storage, treatment, or transmission of water; therefore, agricultural zoning would not apply to CIP projects under the 2012 WRMP Update. Accordingly, the 2012 WRMP Update would not conflict with any Williamson Act contracts or existing zoning for agricultural uses, and no further analysis is required.

Would implementation of the 2012 WRMP Update involve other changes in the existing environment, which, due to their location or nature, could result in conversion of farmland, to non-agricultural use?

Implementation of the 2012 WRMP Update would not convert agricultural lands to non-agricultural uses. Therefore, no impacts to agricultural resources would occur as a result of implementation of the 2012 WRMP Update, and no further analysis is required.

5.1.2 Mineral Resources

Would implementation of the 2012 WRMP Update result in the loss of availability of a known mineral resource that would be of value to the region and to the residents of the State, or result in the loss of a locally important mineral resource recovery site delineated on a local general plan, specific plan, or other land use plan?

The majority of the western portion of the planning area is designated as Mineral Resource Zone 3 (MRZ 3; mineral resources potentially present) by the County of San Diego (DPLU 2007), and portions of the Sweetwater and Otay river valleys and some of the minor drainages feeding into these rivers are designated as MRZ 2 (mineral resources present). Several of the new CIP treatment and pump stations under the 2012 WRMP Update would be constructed on disturbed sites adjacent to existing OWD facilities, and therefore would not result in the loss of potential mineral resources.

5.1.3 Transportation and Traffic

Would implementation of the 2012 WRMP Update cause an increase in traffic which is substantial in relation to the existing traffic load and capacity of the street system (i.e., result in a substantial increase in either the number of vehicle trips, the volume to capacity ratio on roads, or congestion at intersections)?

Construction of CIP projects under the 2012 WRMP Update would generate a minor amount of daily construction-related trips from trucks hauling soil and/or demolition materials from the construction sites; trucks delivering equipment and materials to/from the construction sites; and construction workers driving to/from the construction sites. These localized increases in construction traffic would be temporary. Traffic associated with operation of the CIP projects are primarily from employee commutes. However, operation of CIP projects proposed under the 2012 WRMP Update would not generate a significant volume of new vehicle trips. The maintenance for most of the CIP projects may require approximately one visit per day by OWD employees. Such incremental increases in vehicle trips would not be substantial in relation to the existing traffic load and capacity of intersections, street segments and freeways within the planning area, and no further analysis is required.

Would implementation of the 2012 WRMP Update exceed either individually or cumulatively, a level of service standard established by the county congestion management agency for designated roads or highways?

As discussed in the preceding paragraph, the incremental increases in short-term, construction-related vehicle trips and long-term operational trips associated with the CIP projects under the 2012 WRMP Update would not be substantial in relation to the existing traffic load and capacity of the circulation system, and therefore would not exceed a level of service standard for intersections, street segments and freeways within the planning area. Since there would be no direct or cumulative traffic impacts

associated with implementation of the 2012 WRMP Update, no further analysis is required.

Would implementation of the 2012 WRMP Update result in inadequate emergency access?

Compliance with applicable building codes would ensure that any driveways or other emergency access points would be adequately provided at each CIP reservoir and pump station, where necessary. Therefore, development of CIP reservoirs and pump stations under the 2012 WRMP Update would not result in inadequate emergency access, and no further analysis is required.

Would implementation of the 2012 WRMP Update result in inadequate parking capacity?

The only parking that would be necessary at the CIP reservoirs, pump stations, and wells would be one permanent parking space for an OWD vehicle for maintenance and repair purposes. Therefore, development of CIP reservoirs and pump stations under the 2012 WRMP Update would not result in inadequate parking capacity, and no further analysis is required.

Would implementation of the 2012 WRMP Update conflict with adopted policies, plans, or programs supporting alternative transportation (e.g., bus turnouts, bicycle racks)?

As mentioned previously, the OWD water transmission facilities are not subject to local agency zoning requirements pursuant to Section 53901 of the California Government Code. Due to this exemption, implementation of the 2012 WRMP Update would not conflict with adopted policies, plans, or programs supporting alternative transportation, and no further analysis is required.

5.2 CEQA Checklist Items Not Applicable to the 2012 WRMP Update

The following four topics were not analyzed in Chapter 4.0 of this SPEIR because they are not applicable to the 2012 WRMP Update: population and housing, public services, recreation, and utilities and service systems. Additionally, two issues regarding transportation and traffic were found to be not applicable to the 2012 WRMP Update. The rationales for these findings are explained below.

5.2.1 Population and Housing

Implementation of the 2012 WRMP Update would not displace substantial numbers of existing housing or people, otherwise necessitating the construction of replacement housing elsewhere. Therefore, there would be no impact to housing, and no further analysis is required. The potential for the 2012 WRMP Update to induce substantial population growth, either directly or indirectly is discussed in Section 5.3 below.

5.2.2 Public Services

Implementation of the 2012 WRMP Update would not result in impacts associated with maintaining acceptable service ratios, response times or other performance objectives for fire protection services, police protection services, schools, parks, or any other public facilities. As such, implementation of the 2012 WRMP Update would not require provision of new or physically altered fire protection, police protection, school, and park facilities, the construction of which could cause significant environmental impacts. Therefore, there would be no impact to public services, and no further analysis is required.

5.2.3 Recreation

Implementation of the 2012 WRMP Update would not impact the use of parks or other recreational

facilities, such that substantial physical deterioration of the facility would occur or be accelerated, nor would it include require the construction or expansion of recreational facilities which may have an adverse physical effect on the environment. Therefore, there would be no impact to recreational facilities, and no further analysis is required.

5.2.4 Transportation and Traffic

Implementation of the 2012 WRMP Update would not change air traffic volumes that would result in substantial safety risks. Additionally, implementation of the 2012 WRMP Update would not involve any roadway or intersection improvements that could substantially increase hazards due to a design feature (e.g., sharp curves or dangerous intersections). Therefore, there would be no impact to air traffic patterns or no traffic safety hazards, and no further analysis is required.

5.2.5 Utilities and Service Systems

As stated in Section 3.4.1 (Purpose, Project Description) of this SPEIR, the primary purpose of the 2012 WMMP is to supplement the 2012 WRMP Update, identify and evaluate current wastewater facilities, design feasible wastewater management strategies that allow the OWD to meet projected future wastewater needs within the OWD planning areas of influence, and to develop a phased and systematic approach to implement wastewater management strategies consistent with SANDAG forecasts, through 2030. In addition, another primary purpose of the 2012 WMMP is to ensure an adequate, reliable, flexible, and cost effective wastewater collection and treatment commensurate with growth within the planning area and adjacent areas of influence, consistent with SANDAG forecasts, through 2030. As discussed in Section 4.10 (Public Safety) of this SPEIR, all demolition debris and construction waste associated with construction of CIP projects under the 2012 WRMP Update would be properly handled and disposed of, in accordance with federal, State and local statutes and regulations related to solid waste. Moreover, the long-term operations of CIP projects under the 2012 WRMP Update would not generate solid waste that would impact the permitted capacity of area landfills.

5.3 Growth Inducement

As required by CEQA Guidelines Section 15126.2(d), an EIR must include a discussion of the ways in which a proposed project could directly or indirectly foster economic development or population growth, and how that growth would affect the surrounding environment. Growth can be induced in a number of ways, including the elimination of obstacles to growth, or through the stimulation of economic activity within the region. The discussion of the "removal of obstacles to growth" relates directly to the removal of infrastructure limitations or regulatory constraints that could result in growth unforeseen at the time of project approval. According to CEQA Guidelines Section 15126.2(d), "it must not be assumed that growth in any area is necessarily beneficial, detrimental, or of little significance to the environment." The CEQA Guidelines require a discussion of growth inducement, but not speculation as to when, where and what form growth may occur, as such speculation does not provide the reader with accurate or useful information about the project's potential effects.

Future growth rates and associated wastewater treatment demands within the planning area were estimated within the 2012 WRMP Update to identify the CIP projects that would be needed to serve OWD customers. As discussed in Chapter 4.0 (Cumulative Impacts and Mitigation) of this SPEIR, data on future growth were obtained from SANDAG, the City of Chula Vista, and recent forecasts developed by the OWD. The following sections discuss these data sources, the growth rates estimated for the planning area, and how this data relates to direct and indirect growth inducement with regards to implementation of the 2012 WRMP Update WWMP.

5.3.1 San Diego Association of Governments

SANDAG is a regional planning agency comprised of 18 representatives from city and county governments within the San Diego area. SANDAG is the regional authority for the creation of planning, transportation, and growth forecast documents. The growth projections in the 2012 WRMP Update are based partly on SANDAG's 2004 Regional Comprehensive Plan (RCP). The RCP provides growth projections based on land use data provided by local jurisdictions, and also provides a regional framework to help guide growth and development throughout San Diego. As such, the planning horizon for both the RCP and the 2012 WRMP Update is the year 2030.

With the exception of the portion of the planning area within the City of Chula Vista, the 2012 WRMP Update utilized land use data from SANDAG as a basis for estimating and predicting future land use types and associated water consumption. As various land uses have different water requirements, these land use estimations were used to predict and size capacities for CIP projects under the 2012 WRMP Update.

5.3.2 City of Chula Vista

The southern portion of the planning area is within the jurisdiction of the City of Chula Vista. Between the time frame of the 2002 WRMP and the present 2012 WRMP Update, Chula Vista has grown by nearly 11,500 new residential units (PBS&J 2008). As such, future capacity and water consumption requirements within the portion of the planning area encompassed by Chula Vista were estimated by utilizing residential growth forecasts for the years 2008 through 2012 (City of Chula Vista 2007).

5.3.3 OWD Forecasts

Estimated future capacity needs within the planning area were also calculated by utilizing the OWD's known water consumption data from water meters. This data was applied to land use predictions from SANDAG, the City of Chula Vista, and the County of San Diego to estimate future recycled water and sewer demand within undeveloped portions of the planning area.

5.3.4 Direct and Indirect Growth-Inducing Effects

Implementation of the 2012 WRMP Update would not directly create or induce growth within the planning area because the OWD has no land use authority and cannot approve land development. As stated in Section 5.3 above, indirect growth may result from the removal of physical impediments or restrictions to growth, as well as the removal of planning impediments resulting from land use plans and policies. In this context, physical growth impediments may include nonexistent or inadequate access to an area or the lack of essential public services (e.g., sewer service), while planning impediments may include restrictive zoning and/or general plan designations.

Many of the CIP projects under the 2012 WRMP Update would be constructed at sites that contain existing OWD facilities; therefore, these projects would not result in indirect growth effects. The construction of new CIP facilities within undeveloped areas would be phased commensurate with planned growth; therefore, these projects would also not result in indirect growth effects because the timing of implementation is intended to serve the recycled water and wastewater needs of specified planned developments as they are approved. In other words, none of the CIP projects under the 2012 WRMP Update would be developed in anticipation of unforeseen or unplanned future growth. Therefore, implementation of the 2012 WRMP Update would not be growth-inducing because it would not remove an impediment to growth.

Furthermore, construction of CIP projects under the 2012 WRMP Update would generate new jobs throughout the planning area, but this additional economic activity would be incremental compared to the

economic growth of the greater San Diego region. Therefore, implementation of the 2012 WRMP Update would not be growth-inducing because it would not foster substantial economic expansion or growth in the region.

5.4 Significant and Unavoidable Environmental Impacts

Section 15126.2(b) of the CEQA Guidelines requires the identification of significant impacts that would not be avoided, even with the implementation of PDFs, SCPs, and feasible mitigation/performance measures. The final determination of significance of impacts and of the feasibility of mitigation/performance measures will be made by the OWD Board of Directors as part of their certification of this SPEIR. Sections 4.1 through 4.10 of this SPEIR provide a programmatic evaluation of the potentially significant environmental effects and corresponding mitigation/performance measures associated with implementation of the 2012 WRMP Update. According to this evaluation, all potential environmental effects would be reduced to less than significant levels with implementation of identified PDFs, SCPs and feasible mitigation/performance measures, and no significant unavoidable environmental impacts would remain.

5.5 Significant Irreversible Environmental Effects

Section 15126.2(c) of the CEQA Guidelines requires a discussion of any significant irreversible environmental changes that would be caused by a proposed project, as follows:

Uses of nonrenewable resources during the initial and continued phases of the project may be irreversible, since a large commitment of such resources makes removal or nonuse thereafter unlikely. Primary impacts and, particularly, secondary impacts (such as highway improvement which provides access to a previously inaccessible area) generally commit future generations to similar uses. Also, irreversible damage can result from environmental accidents associated with the project. Irretrievable commitments of resources should be evaluated to assure that such current consumption is justified.

Generally, a project would result in significant irreversible environmental changes if:

- The primary and secondary impacts would generally commit future generations to similar uses;
- The project would involve a large commitment of nonrenewable resources;
- The project involves uses in which irreversible damage would result from any potential environmental accidents associated with the project; or
- The proposed consumption of resources is not justified (e.g., the project involves the wasteful use of energy).

Development and construction of wastewater infrastructure produces recycled water and under the 2012 WRMP Update would allow the OWD to continue to supply recycled water to its current and future users within the planning area. Resources that would be permanently and continually consumed by implementation of the 2012 WRMP Update include water, electricity, natural gas, and fossil fuels. However, the amount and rate of consumption of these resources would not result in significant environmental impacts or the unnecessary, inefficient, or wasteful use of resources for the reasons given in Section 5.2.5 above (refer to discussion of wastewater and the production of recycled water supply) and Section 4.4 (Energy) of this SPEIR. Nonetheless, construction and operations associated with implementation of the 2012 WRMP Update would result in the irretrievable commitment of nonrenewable energy resources. It is also possible that new technologies or systems would emerge, or

would become more cost-effective or user-friendly, upon which OWD may rely to further reduce their reliance on nonrenewable energy resources. Overall, the consumption of natural resources associated with implementation of the 2012 WRMP Update is expected to increase at a lesser rate than the projected population increase within the planning area due to the variety of energy conservation measures that the OWD will continue to implement, expand and develop in their continual quest to achieve energy efficiency for their construction and operational activities (refer to Section 4.4, Energy, of this SPEIR).

The CEQA Guidelines also require a discussion of the potential for irreversible environmental damage caused by an accident. As discussed in Section 4.10 (Public Safety) of this SPEIR, the OWD uses, transports, stores, and disposes of hazardous materials in accordance with applicable federal, State and local regulations, as well as with existing OWD programs, practices, and procedures related to hazardous materials, to reduce the likelihood and severity of accidents that would result in irreversible environmental damage. Therefore, implementation of Haz-PDF-1 would reduce hazards to the public or the environment through the transport, storage, use, or disposal of hazardous materials during CIP operations, and associated accidental releases of hazardous materials into the environment and near schools, to a less than significant level.

CHAPTER 6.0
PROJECT ALTERNATIVES

The California Environmental Quality Act (CEQA) requires an EIR to describe and evaluate a range of reasonable alternatives to a proposed project, or alternatives to the location of a proposed project. The purpose of the alternatives analysis is to explore ways that most of the basic objectives of a proposed project could be attained, while reducing or avoiding significant environmental impacts of the project as proposed. This approach is intended to foster informed decision-making and public participation in the environmental process.

This chapter evaluates alternatives to the 2012 WRMP Update and examines the potential environmental impacts associated with each alternative. The State CEQA Guidelines indicate that EIRs are required to evaluate a "…range of reasonable alternatives to the project, or to the location of the project, which could feasibly attain the basic objectives of the project" (Section 15126.6[a] State CEQA Guidelines). According to the Guidelines, not every conceivable alternative must be addressed, nor do infeasible alternatives need be considered. Section 15126.6 of the CEQA Guidelines lists the factors that may be taken into account when addressing the feasibility of alternatives: site suitability, economic viability, availability of infrastructure, other plans or regulatory limitations, and jurisdictional boundaries. The Guidelines also state that the discussion of alternatives should focus on "…alternatives capable of avoiding or substantially lessening any significant effects of the project, even if these alternatives could impede to some degree the attainment of the project objectives or would be more costly" (Section 15166.6[b] State CEQA Guidelines). CEQA further directs that "…the significant effects of the alternatives shall be discussed, but in less detail than the significant effects of the project as proposed" (Section 15126.6[d] State CEQA Guidelines).

6.1 Project Objectives

As stated in Section 3.4.2 (Goals and Objectives, Project Description) of this SPEIR, the goals and objectives of the 2012 WRMP Update include the following actions:

… **Update Planning Criteria**: Update the OWD Land Use Database to incorporate recent and future population projections and planned development projects. Review system performance criteria based upon planning criteria, and make recommendations for revised or new criteria, as required. Evaluate compliance of existing potable and recycled water distribution systems with established planning criteria.

… **Update Hydraulic Model:** Convert the 2002 hydraulic models into a new modeling program that incorporates OWD's Geographic Information Systems capabilities. Calibrate the hydraulic models to observed actual conditions utilizing data derived from the SCADA (Supervisory Control and Data Acquisition) system.

… **Evaluate Existing Waste Water Management Systems**: Make recommendations for improvements to correct deficiencies of existing systems, and to meet demands of the future planning area and identified area of influence based upon development patterns, types, location and timing.

… **Evaluate Future Wastewater Management Systems**: Conduct additional hydraulic modeling for each pressure zone and system to analyze distribution system facilities under 6-year

(2009-2015) and ultimate (2016-2030) demand conditions. Recommend future CIP projects to serve these conditions.

… **Update CIP:** Develop a phased implementation plan for recommended CIP projects, and estimated costs for identified projects. Incorporate water resource strategies, short-term implementation strategies, and infrastructure needs for the long-term strategies identified in OWD's IWRP.

6.2 Otay Water District Wastewater Management Plan

Currently the District receives approximately 1.36 MGD of wastewater from the Jamacha Basin and treats approximately 1.3 MGD at the Ralph W. Chapman Water Recycling Facility (RWCWRF). Any excess flows beyond the RWCWRF's capacity are diverted through the Rancho San Diego Outfall Facilities to the City of San Diego Metropolitan Wastewater System.

6.3 Alternatives Analyzed

This section presents an evaluation of four alternatives to the proposed 2012 WRMP Update: No Project Alternative (Alternative 1), Eliminate Wastewater Treatment Within District (Alternative 2), Recycle All Wastewater Flows Within District (Alternative 3), and Recycle All Wastewater Flows Within District And Expanding To Accept Wastewater From Other Service Areas (Alternative 4). For all four alternatives, a brief description is included, followed by a summary impact analysis relative to the 2012 WRMP Update, and an assessment of the degree to which the alternative would meet the goals and objectives of the 2012 WRMP Update.

6.3.1 No Project Alternative

Section 15126.6(e) of the CEQA Guidelines requires the No Project Alternative to be addressed in an EIR. Under this alternative, the OWD Board of Directors would not adopt the 2012 WRMP Update.

Impact Analysis

Alternative 1 would not necessarily prevent the implementation of the CIP projects listed in the 2012 WRMP Update. Without the 2012 WRMP Update, these projects could still be constructed on an individual basis. The potential environmental impacts associated with implementation of the CIP projects identified in this SPEIR would still occur. These impacts would be reduced to less than significant levels with implementation of the various PDFs, SCPs, and mitigation/performance measures identified in this SPEIR.

Ability to Accomplish Project Objectives

Alternative 1 would not meet any of the objectives identified for the 2012 WRMP Update. Under this alternative, OWD would not be able to fulfill State, regional, and local polices which mandate the development of alternative water sources. This would hinder OWD's ability to meet the future wastewater demands of the planning area. In addition, this alternative would deny OWD the opportunity to streamline the environmental review of future projects with this SPEIR and subsequent tiered CEQA documents.

6.3.2 Eliminate Wastewater Treatment Within District

Alternative 2 would eliminate the capacity for OWD to treat wastewater, passing all wastewater to neighboring communities.

Under Alternative 2, the District would abandon the current wastewater treatment operations at the RWCWRF and all wastewater flows collected by the District would be conveyed to the City of SD Metropolitan Wastewater System. Other components associated with this alternative include, decommissioning the RWCWRF; implementing the required Rancho San Diego PS improvements; maintaining and improving the wastewater collection system based on hydraulic modeling.

Treatment options for wastewater flows being conveyed to the City of SD Metropolitan Wastewater System could be to either maintain current primary treatment or implement secondary treatment. Recycled water supply options under this alternative include receiving reclaimed water from the SBWRP and/or the proposed City of Chula Vista reclamation facility.

Impact Analysis

Alternative 2 may result in incrementally reduced impacts to biological resources, in comparison to the proposed CIP projects. However, biological impacts in undeveloped areas could still occur due to the decommissioning and demolition activities associated with the action. Temporary impacts to air quality may incrementally decrease with this alternative, as it may take less time to demolish facilities. Impacts to cultural resources may also be reduced. In general, Alternative 2 may result in less environmental impacts in comparison to the proposed CIP projects, but increases cumulative impacts in surrounding communities.

Ability to Accomplish Project Objectives

Alterative 2 would not meet the objectives identified for the 2012 WRMP Update. The CIP projects listed in the 2012 WRMP Update are designed to meet the w a s t e water management demands of the planning area and identified area of influence based upon development patterns, types, location and timing. This could result in increased impacts to air quality, cultural resources, energy consumption, landform alteration, water quality, and noise.

6.3.3 Recycle All Wastewater Flows Within District

Alternative 3 would continue collecting and treating wastewater at the RWCWRF under the current capacity of 1.3 MGD or operations could potentially be expanded to approximately 2.6 MGD. Excess flows beyond the RWCWRF's capacity would be conveyed to the City of SD Metropolitan Wastewater System. Other components associated with this alternative include implementing the required Rancho San Diego PS improvements and maintaining and improving the wastewater collection system based on hydraulic modeling.

Options for solid waste disposal would include continuing current practices of conveyance to the Metropolitan Wastewater System or handling/treating solid waste onsite and disposing residuals in landfill. Treatment options for wastewater flows being conveyed to the City of SD Metropolitan Wastewater System could be to either maintain current primary treatment or implement secondary treatment. Recycled water supply options under this alternative include receiving reclaimed water from the RWCWRF, the SBWRP and/or the proposed City of Chula Vista reclamation facility.

Impact Analysis

Alternative 3 may result in no reduced impacts to any environmental resource in comparison to the proposed CIP projects. In general, Alternative 3 may result in more environmental impacts in comparison to the proposed CIP projects, but decreases cumulative impacts in surrounding communities.

Ability to Accomplish Project Objectives

Alterative 3 would meet some of the objectives identified for the 2012 WRMP Update. Under this alternative, OWD would be able to fulfill State, regional, and local polices which mandate the development of alternative water sources. This would enhance OWD's ability to meet the future wastewater demands of the planning area. The CIP projects listed in the 2012 WRMP Update are designed to meet the wastewater management demands of the planning area and identified area of influence based upon development patterns, types, location and timing..

6.3.4 Recycle All Wastewater Flows Within District and Expanding To Accept Wastewater From Other Service Areas

Alternative 4 would continue collecting and treating wastewater at the RWCWRF under an increased capacity of up to approximately 3.9 MGD. Under this scenario, the District would be able to treat all wastewater from the Jamacha Basin and any other service areas that needed wastewater treatment. Excess flows beyond the RWCWRF's capacity (if any) would be conveyed to the City of SD Metropolitan Wastewater System. Other components associated with this alternative include implementing the required Rancho San Diego PS improvements and maintaining and improving the wastewater collection system based on hydraulic modeling.

Options for solid waste disposal would include continuing current practices of conveyance to the Metropolitan Wastewater System or handling/treating solid waste onsite and disposing residuals in landfill. Treatment options for wastewater flows being conveyed to the City of SD Metropolitan Wastewater System could be to either maintain current primary treatment or implement secondary treatment. Recycled water supply options under this alternative include receiving reclaimed water from the RWCWRF, the SBWRP and/or the proposed City of Chula Vista reclamation facility.

Impact Analysis

Alternative 4 may result in no reduced impacts to any environmental resource in comparison to the proposed CIP projects. In general, Alternative 4 may result in more environmental impacts in comparison to the proposed CIP projects, but decreases cumulative impacts in surrounding communities.

Ability to Accomplish Project Objectives

Alterative 4 would meet some of the objectives identified for the 2012 WRMP Update. Under this alternative, OWD would be able to fulfill State, regional, and local polices which mandate the development of alternative water sources. This would enhance OWD's ability to meet the future wastewater demands of the planning area. The CIP projects listed in the 2012 WRMP Update are designed to meet the wastewater management demands of the planning area and identified area of influence based upon development patterns, types, location and timing.

Environmentally Superior Alternative

CEQA Guidelines Section 15126.6(e) (2) requires that an EIR identify the environmentally superior alternative from among the range of reasonable alternatives that are evaluated. Alternative 1 (No Project Alternative) would avoid all potentially significant environmental impacts identified for the 2012 WRMP Update. However, Alternative 1 would not preclude implementation of some, if not all, of the CIP projects on an individual basis. In addition, this alternative would not meet any of the objectives of the 2012 WRMP Update.

CEQA Guidelines Section 15126.6(e) (2) also requires that an EIR identify another alternative as environmentally superior, besides Alternative 1 (No Project Alternative). In this case, the next environmentally superior alternative would be Alternative 2 (Eliminate Wastewater Treatment Within District), which would reduce, but not eliminate, potential impacts to air quality, biological, and

cultural resources. As this is a long range planning document a preferred alternative will not be determined in this document.

CHAPTER 7.0
ACRONYMS AND ABBREVIATIONS

ACOE	U.S. Army Corps of Engineers
AMSL	above mean sea level
BLM	Bureau of Land Management
BMPs	Best Management Practices
Caltrans	California Department of Transportation
CAPCOA	California Climate Action Team
CBC	California Building Code
CCC	California Coastal Commission
CDFG	California Department of Fish and Game
CDFW	California Department of Fish and Wildlife
CDMG	California Department of Conservation, Division of Mines and Geology
CDTSC	California Department of Toxic Substances Control
CEC	California Energy Commission
CEQA	California Environmental Quality Act
CFR	Code of Federal Regulations
CIP	Capital Improvement Program
CO_2	Carbon Dioxide
CWA	Clean Water Act
DEH	County of San Diego Department of Environmental Health
EIR	Environmental Impact Report
ESA	Endangered Species Act
Fed/OSHA	Federal/Occupational Safety and Health Administration
FHA	Federal Highway Administration
ft	feet
FY	Fiscal Year
GDP	General Development Plan
GHG	Greenhouse gases
GPM	gallons per minute
HCP	Habitat Conservation Plan
HMBP	Hazardous Materials Business Plan

I-805	Interstate 805
IWRP	Integrated Water Resources Plan
LF	linear feet
MGD	millions of gallons per day
MRZ	Minerals Resources Zone
NAHC	Native American Heritage Commission
NCCP	Natural Communities Conservation Plan
NHPA	National Historic Preservation Society
NRHP	National Register of Historic Places
NOP	Notice of Preparation
OWD	Otay Water District
PDFs	Project Design Features
PEIR	Program Environmental Impact Report
PS	Pump Station
RCP	Regional Comprehensive Plan
RWCWRF	Ralph W. Chapman Water Recycling Facility
RWQCB	Regional Water Quality Control Board
SAMPs	Sub Area Master Plans
SANDAG	San Diego Association of Governments
SBWRP	South Bay Water Reclamation Plant
SCADA	Supervisory Control and Data Acquisition
SCPs	Standard Construction Practices
SD	San Diego
SDAPCD	San Diego Air Pollution Control District
SDCWA	San Diego County Water Authority
SIP	State Implementation Plan
SPAs	Specific/Sectional Planning Areas
SPEIR	Supplemental Program Environmental Impact Report
SR-94	State Route 94
SWPPP	Storm Water Pollution Prevention Plan
SWRCB	State Water Resources Control Board
UBC	Uniform Building Code
U.S.	United States
USDOT	United States Department of Transportation
USEPA	U.S. Environmental Protection Agency

USFWS	U.S. Fish and Wildlife Service
WRMP	Water Resources Master Plan
WTP	Water Treatment Plan
WWMP	Waste Water Management Plan

CHAPTER 8.0 **LIST OF PREPARERS**

The following professional staff participated in the preparation of this SPEIR.

OTAY WATER DISTRICT (OWD)

Lisa Coburn-Boyd	Environmental Compliance Specialist

ARCADIS

Tim Francis	Project Manager
Edward Basmadjian	Senior Environmental Scientist
Holly Makowski	Graphics

CHAPTER 9.0 **LIST OF RECIPIENTS**

California Department of Parks and Recreation

California Department of Water Resources

California Department of Fish and Wildlife (CDFW), Region 5

California Department of Public Health

Native American Heritage Commission (NAHC)

California Department of Transportation (Caltrans), District 11

California Department of Toxic Substances Control (CDTSC)

Regional Water Quality Control Board (RWQCB), Region 9

California Resources Agency

State Water Resources Control Board (SWRCB), Division of Financial Assistance

Valle de Oro Community Planning Group

San Diego Main Public Library

County Public Library, Rancho San Diego Branch

County Public Library, La Mesa Branch

Chula Vista Public Library, Civic Center Branch

APPENDIX A

NOTICE OF PREPARATION (NOP) AND RESPONSES

Please refer to the following attached pages:

NOTICE OF PREPARATION
PUBLIC SCOPING MEETING NOTICE

OTAY WATER DISTRICT WASTEWATER MANAGEMENT PLAN SUPPLEMENTAL PROGRAM ENVIRONMENTAL IMPACT REPORT (SPEIR) TO THE OTAY WATER DISTRICT 2009 WATER RESROUCES MASTER PLAN UPDATE 2010 FINAL PROGRAM ENVIRONMENTAL IMPACT REPORT (PEIR)

DATE: July 16th, 2012

TO: Responsible, Trustee, and Other Jurisdictional Agencies and Other Interested Organizations/Individuals

LEAD AGENCY: Otay Water District
2554 Sweetwater Springs Boulevard
Spring Valley, CA 91978-2004

In accordance with the California Environmental Quality Act (CEQA) and State CEQA Guidelines (CCR Title 14, §§15082(a), 15103, and 15375), this Notice of Preparation (NOP) is hereby sent to inform you that the Otay Water District (OWD) is preparing a Draft Supplemental Program EIR (SPEIR) to assess the environmental effects associated with implementation of the Wastewater Management Plan (WWMP). A Draft Supplemental Program EIR is being prepared pursuant to CEQA Guidelines §15163, to supplement the 2010 Final Program EIR for the OWD 2009 Water Resources Master Plan Update (WRMP) because the WWMP contains many features and issues of wastewater/recycled water that have been previously addressed and analyzed within the 2009 WRMP. This document would also be prepared (pursuant to CEQA Guidelines §15168) as a Program EIR because the WWMP is a policy, not development project, document that describes several wastewater alternatives for a long-term systematic approach to meet future wastewater needs through the Year 2030. The WWMP is intended to complement approved land use development plans and growth projects within the OWD service area and adjacent areas of influence, consistent with the San Diego Association of Government forecasts. The WWMP would include projects with new construction and/or demolition associated with expanding or reducing wastewater facilities, dependent upon which alternative is chosen as the Preferred Alternative. The SPEIR would provide the basis for subsequent environmental review of future wastewater projects.

As Lead Agency under CEQA, we need to know the views of your agency as to the scope and content of the environmental information that is germane to your agency's statutory responsibilities in connection with implementation of the WWMP. Your agency may need to use the SPEIR prepared by the OWD when considering your permit or other approvals. The OWD requests that any potential responsible or trustee agency respond to this NOP in a manner consistent with State CEQA Guidelines Section 15082(b). If you are responding as an interested organization or individual citizen, we need to know your views as to the environmental information you would like us to address in the Draft SPEIR.

Attachment 1 provides an overview of the WWMP alternatives and its objectives, and a map of the WWMP planning area and adjacent areas of influence, including sewer service locations is provided in Attachment 2.

Public Scoping Meeting: A public scoping meeting would be held to provide more information on the WWMP, and to give the public an opportunity to offer comments and suggestions on the scope of the Draft SPEIR. The public scoping meeting would provide the OWD with an opportunity to learn about potential concerns, mitigation measures, and alternatives that may warrant in-depth analysis in the environmental review process. The date, time, and address of this meeting are provided below:

Date: August 2nd, 2012
Time: Between 4:00 PM and 6:00 PM
Place: Otay Water District
Training Room
2554 Sweetwater Springs Boulevard
Spring Valley, CA 91978-2004

Due to the time limits mandated by State Law, your response must be sent at the earliest possible date, but **not later than 30 days after receipt of this NOP**. Please send your written responses, including the name of a contact person and phone number, to:

Lisa Coburn-Boyd
Otay Water District
2554 Sweetwater Springs Boulevard
Spring Valley, CA 91978-2004
Phone: 619-670-2219
Fax: 619-670-8920
E-mail: lisa.coburn-boyd@otaywater.gov

Any written or oral comments received at the public scoping meeting would be considered in preparing the Draft SPEIR, along with any written comments received during the 30-day NOP public comment period. All parties that have submitted their names and mailing addresses would be notified of subsequent actions as part of the environmental review process. If you wish to be placed on the mailing list or have any questions about the WWMP, please contact Ms. Lisa Coburn-Boyd at the phone number above.

Signature:
OTAY WATER DISTRICT
Name: Lisa Coburn-Boyd
Title: Environmental Compliance Specialist
Date: July 16th , 2012

Attachments: Overview of WWMP alternatives
Map of WWMP project area and adjacent areas of influence, including sewer service locations.

Attachment 1

Overview

The purpose of the Otay Water District (OWD) Wastewater Management Plan (WWMP) is to supplement the 2009 Water Resources Management Plan Update (WRMP), identify and evaluate current wastewater facilities (e.g., wastewater pumping stations and treatment plants), design feasible wastewater management strategies that allow the OWD to meet projected future wastewater needs within the OWD planning area and adjacent areas of influence, and to develop a phased and systematic approach to implement the wastewater management strategies during future time frames. The OWD WWMP would ensure a wastewater system adequate for projected growth within the OWD planning area and adjacent areas of influence, consistent with the San Diego Association of Governments (SANDAG) forecasts through 2030.

The WWMP currently consists of several wastewater alternatives with differing project features and components. These alternatives give the OWD the most flexibility in choosing the best alternative that fulfills their wastewater strategies and meets projected future demand.

- Alternative 1 – Eliminate Wastewater Treatment Within District

  Under this alternative, the District would abandon the current wastewater treatment operations at the Ralph W. Chapman Water Recycling Facility (RWCWRF) and all wastewater flows collected by the District would be conveyed to the City of San Diego (SD) Metropolitan Wastewater System. Other components associated with this alternative include, decommissioning the RWCWRF; implementing the required Rancho San Diego Pump Station (PS) improvements; maintaining and improving the wastewater collection system based on hydraulic modeling.

  Treatment options for wastewater flows being conveyed to the City of SD Metropolitan Wastewater System could be to either maintain current primary treatment or implement secondary treatment. Recycled water supply options under this alternative include receiving reclaimed water from the SBWRP and/or the planned City of Chula Vista reclamation facility.

- Alternative 2 – Recycle All Wastewater Flows Within District

  Under this alternative, the District would continue collecting and treating wastewater at the RWCWRF under the current capacity of 1.3 mgd or operations could potentially be expanded to approximately 2.6 mgd. Excess flows beyond the RWCWRF's capacity would be conveyed to the City of SD Metropolitan Wastewater System. Other components associated with this alternative include implementing the required Rancho San Diego PS improvements and maintaining and improving the wastewater collection system based on hydraulic modeling.

Options for solid waste disposal would include continuing current practices of conveyance to the Metropolitan Wastewater System or handling/treating solid waste onsite and disposing residuals in landfill. Treatment options for wastewater flows being conveyed to the City of SD Metropolitan Wastewater System could be to either maintain current primary treatment or implement secondary treatment. Recycled water supply options under this alternative include receiving reclaimed water from the RWCWRF, the SBWRP and/or the planned City of Chula Vista reclamation facility.

- Alternative 3 – Recycle All Wastewater Flows Within District and Expand To Accept Wastewater From Other Service Areas

  Under this alternative, the District would continue collecting and treating wastewater at the RWCWRF under an increased capacity of up to approximately 3.9 mgd. Under this scenario, the District would be able to treat all wastewater from the Jamacha Basin and any other service areas that needed wastewater treatment. Excess flows beyond the RWCWRF's capacity (if any) would be conveyed to the City of SD Metropolitan Wastewater System. Other components associated with this alternative include implementing the required Rancho San Diego PS improvements and maintaining and improving the wastewater collection system based on hydraulic modeling.

  Options for solid waste disposal would include continuing current practices of conveyance to the Metropolitan Wastewater System or handling/treating solid waste onsite and disposing residuals in landfill. Treatment options for wastewater flows being conveyed to the City of SD Metropolitan Wastewater System could be to either maintain current primary treatment or implement secondary treatment. Recycled water supply options under this alternative include receiving reclaimed water from the RWCWRF, the SBWRP and/or the planned City of Chula Vista reclamation facility.

The process to finalize the WWMP requires addressing environmental impacts for each wastewater alternative. Pursuant to State CEQA Guidelines, OWD must prepare a SPEIR to obtain approval and formal adoption of the WWMP. The SPEIR would provide an overview of the wastewater alternatives identified in the WWMP, and their impacts in terms of visual aesthetics/landform alteration, air quality/global climate change, biological resources, cultural resources, energy, geology/soils/paleontological resources, hydrology/water quality, land use/planning, noise, cumulative effects, and growth inducement. The PEIR for the 2009 WRMP was completed in January 2010.

<u>Goals & Objectives</u>

The WWMP will identify a comprehensive system-wide plan for a wastewater system within the OWD planning area and the identified area of influence. The OWD's primary objectives for the WWMP include the following actions:

- **Update Planning Criteria:** Update the land use database model from the 2010 WRMP using San Diego County land use updates and 2010 SANDAG land use projections. Project the wastewater flows within the District's service area and adjacent areas of influence using population (residential and employment) projections and per capita generation factors.
- **Update Hydraulic Model:** Update the OWD 2006 hydraulic model using data from the County's updated hydraulic model for the Jamacha Basin.
- **Evaluate Existing Wastewater Systems:** Make recommendations for improvements to correct deficiencies of existing systems, and to meet any demands of the planning area and identified area of influence based upon development patterns, types, location and timing.
- **Evaluate Future Wastewater Systems:** Using the projected wastewater collection rates for the planning area, determine new wastewater collection system facilities needs to build out and develop a list of capital improvement program projects to meet these needs. Develop strategies for treatment of the collected wastewater flows and their corresponding CIP needs.
- **Update CIP:** Develop a phased implementation plan for recommended CIP projects for the existing system deficiencies and any new facilities and estimate costs for identified projects.

Attachment 2

Map of WWMP project area and adjacent areas of influence, including sewer service locations.

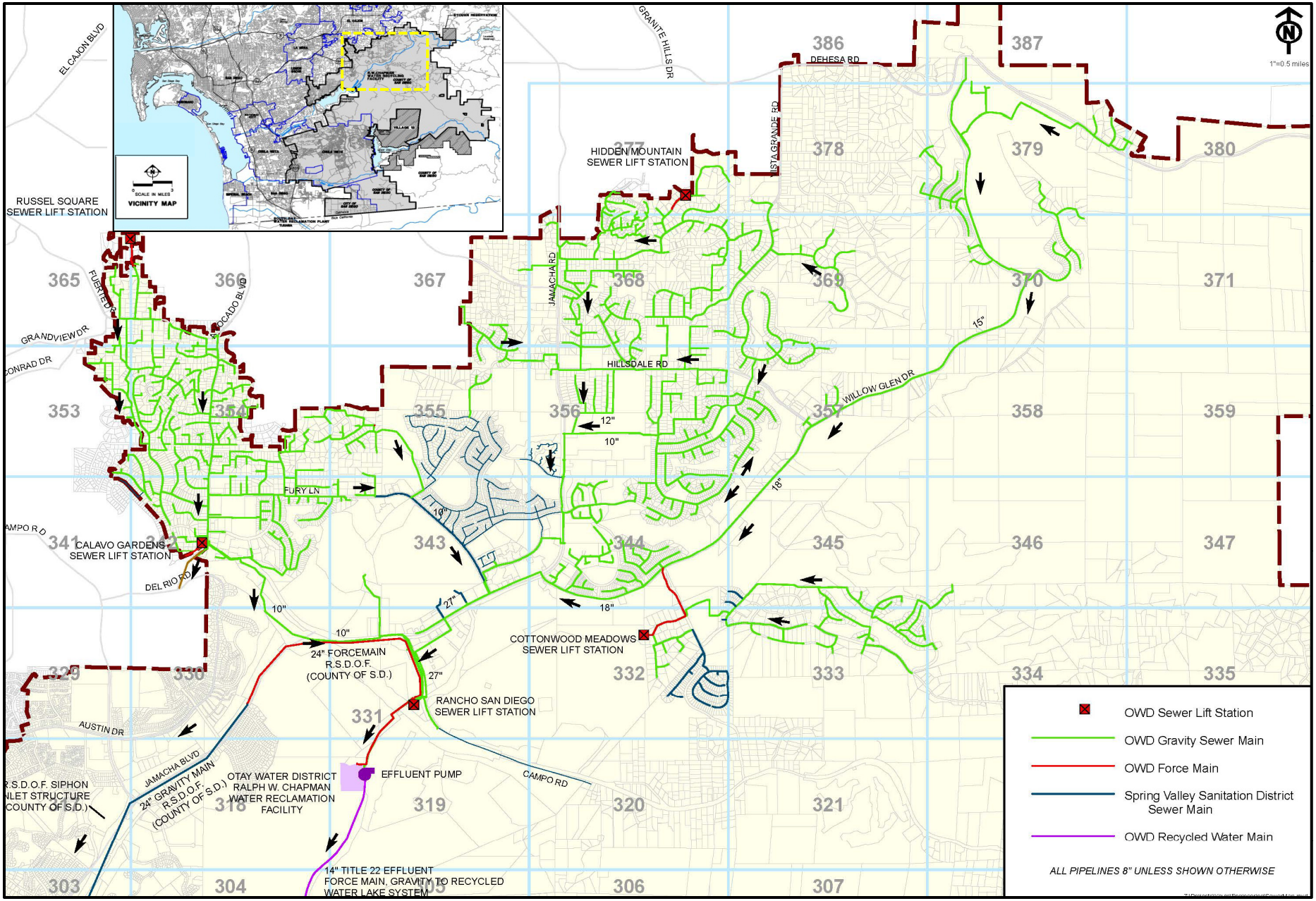

Otay Water District Wastewater Service Area

EDMUND G. BROWN JR.
GOVERNOR

STATE OF CALIFORNIA

GOVERNOR'S OFFICE *of* PLANNING AND RESEARCH

STATE CLEARINGHOUSE AND PLANNING UNIT

OTAY WATER DISTRICT
RECEIVED
2012 JUL 25 AM 11: 39

KEN ALEX
DIRECTOR

Notice of Preparation

July 20, 2012

To: Reviewing Agencies

Re: Otay Water District Wastewater Management Plan Update
SCH# 2012071069

Attached for your review and comment is the Notice of Preparation (NOP) for the Otay Water District Wastewater Management Plan Update draft Environmental Impact Report (EIR).

Responsible agencies must transmit their comments on the scope and content of the NOP, focusing on specific information related to their own statutory responsibility, within 30 days of receipt of the NOP from the Lead Agency. This is a courtesy notice provided by the State Clearinghouse with a reminder for you to comment in a timely manner. We encourage other agencies to also respond to this notice and express their concerns early in the environmental review process.

Please direct your comments to:

Lisa Coburn-Boyd
Otay Water District
2554 Sweetwater Springs Boulevard
Spring Valley, CA 91978-2004

with a copy to the State Clearinghouse in the Office of Planning and Research. Please refer to the SCH number noted above in all correspondence concerning this project.

If you have any questions about the environmental document review process, please call the State Clearinghouse at (916) 445-0613.

Sincerely,

Scott Morgan
Director, State Clearinghouse

Attachments
cc: Lead Agency

1400 10th Street P.O. Box 3044 Sacramento, California 95812-3044
(916) 445-0613 FAX (916) 323-3018 www.opr.ca.gov

Document Details Report
State Clearinghouse Data Base

SCH# 2012071069
Project Title Otay Water District Wastewater Management Plan Update
Lead Agency Otay Water District

Type NOP Notice of Preparation

Description The purpose of the Otay Water District (OWD) Wastewater Management Plan (WWMP) is to supplement the 2009 Water Resources Management Plan Update (WRMP), identify and evaluate current wastewater facilities, design feasible wastewater management strategies that allow the OWD to meet projected future wastewater needs within the OWD planning area and adjacent areas of influence, and to develop a phased and systematic approach to implement the wastewater management strategies during future time frames. The OWD WWMP would ensure a wastewater system adequate for projected growth within the OWD planning area and adjacent areas of influence, consistent with the San Diego Association of Governments (SANDAG) forecasts through 2030.

Lead Agency Contact

Name Lisa Coburn-Boyd
Agency Otay Water District
Phone (619) 670-2219 **Fax**
email
Address 2554 Sweetwater Springs Boulevard
City Spring Valley **State** CA **Zip** 91978-2004

Project Location

County San Diego
City
Region
Cross Streets Northern Portion of Otay Water District
Lat / Long
Parcel No.
Township **Range** **Section** **Base**

Proximity to:

Highways Hwy 94, 125
Airports No
Railways No
Waterways Sweetwater River and Reservoir
Schools Loma Es, Monte Vista...
Land Use Varies

Project Issues Aesthetic/Visual; Air Quality; Archaeologic-Historic; Biological Resources; Sewer Capacity; Toxic/Hazardous; Traffic/Circulation; Water Quality; Water Supply; Growth Inducing; Cumulative Effects

---

Reviewing Agencies Department of Parks and Recreation; Department of Water Resources; Department of Fish and Game, Region 5; CA Department of Public Health; Native American Heritage Commission; Caltrans, District 11; Department of Toxic Substances Control; Regional Water Quality Control Board, Region 9; Resources Agency; State Water Resources Control Board, Divison of Financial Assistance

---

Date Received 07/19/2012 **Start of Review** 07/20/2012 **End of Review** 08/20/2012

Note: Blanks in data fields result from insufficient information provided by lead agency.

NOP Distribution List

County: San Diego

SCH# 2012071069

Resources Agency

- [x] Resources Agency
  Nadell Gayou
- [ ] Dept. of Boating & Waterways
  Nicole Wong
- [ ] California Coastal Commission
  Elizabeth A. Fuchs
- [ ] Colorado River Board
  Gerald R. Zimmerman
- [ ] Dept. of Conservation
  Elizabeth Carpenter
- [ ] California Energy Commission
  Eric Knight
- [ ] Cal Fire
  Dan Foster
- [ ] Central Valley Flood Protection Board
  James Herota
- [ ] Office of Historic Preservation
  Ron Parsons
- [x] Dept of Parks & Recreation
  Environmental Stewardship Section
- [ ] California Department of Resources, Recycling & Recovery
  Sue O'Leary
- [ ] S.F. Bay Conservation & Dev't. Comm.
  Steve McAdam
- [x] Dept. of Water Resources Resources Agency
  Nadell Gayou

Fish and Game

- [ ] Depart. of Fish & Game
  Scott Flint
  Environmental Services Division
- [ ] Fish & Game Region 1
  Donald Koch
- [ ] Fish & Game Region 1E
  Laurie Harnsberger
- [ ] Fish & Game Region 2
  Jeff Drongesen
- [ ] Fish & Game Region 3
  Charles Armor
- [ ] Fish & Game Region 4
  Julie Vance
- [x] Fish & Game Region 5
  Leslie Newton-Reed
  Habitat Conservation Program
- [ ] Fish & Game Region 6
  Gabrina Gatchel
  Habitat Conservation Program
- [ ] Fish & Game Region 6 I/M
  Brad Henderson
  Inyo/Mono, Habitat Conservation Program
- [ ] Dept. of Fish & Game M
  George Isaac
  Marine Region

Other Departments

- [ ] Food & Agriculture
  Sandra Schubert
  Dept. of Food and Agriculture
- [ ] Depart. of General Services
  Public School Construction
- [ ] Dept. of General Services
  Anna Garbeff
  Environmental Services Section
- [x] Dept. of Public Health
  Bridgette Binning
  Dept. of Health/Drinking Water
- [ ] Delta Stewardship Council
  Kevan Samsam

Independent Commissions,Boards

- [ ] Delta Protection Commission
  Michael Machado
- [ ] Cal EMA (Emergency Management Agency)
  Dennis Castrillo
- [x] Native American Heritage Comm.
  Debbie Treadway
- [ ] Public Utilities Commission
  Leo Wong
- [ ] Santa Monica Bay Restoration
  Guangyu Wang
- [ ] State Lands Commission
  Jennifer Deleong
- [ ] Tahoe Regional Planning Agency (TRPA)
  Cherry Jacques

Business, Trans & Housing

- [ ] Caltrans - Division of Aeronautics
  Philip Crimmins
- [ ] Caltrans - Planning
  Terri Pencovic
- [ ] California Highway Patrol
  Suzann Ikeuchi
  Office of Special Projects
- [ ] Housing & Community Development
  CEQA Coordinator
  Housing Policy Division

Dept. of Transportation

- [ ] Caltrans, District 1
  Rex Jackman
- [ ] Caltrans, District 2
  Marcelino Gonzalez
- [ ] Caltrans, District 3
  Gary Arnold
- [ ] Caltrans, District 4
  Erik Alm
- [ ] Caltrans, District 5
  David Murray
- [ ] Caltrans, District 6
  Michael Navarro
- [ ] Caltrans, District 7
  Dianna Watson
- [ ] Caltrans, District 8
  Dan Kopulsky
- [ ] Caltrans, District 9
  Gayle Rosander
- [ ] Caltrans, District 10
  Tom Dumas
- [x] Caltrans, District 11
  Jacob Armstrong
- [ ] Caltrans, District 12
  Marlon Regisford

Cal EPA

Air Resources Board

- [ ] Airport/Energy Projects
  Jim Lerner
- [ ] Transportation Projects
  Douglas Ito
- [ ] Industrial Projects
  Mike Tollstrup
- [x] State Water Resources Control Board
  Regional Programs Unit
  Division of Financial Assistance
- [ ] State Water Resources Control Board
  Student Intern, 401 Water Quality Certification Unit
  Division of Water Quality
- [ ] State Water Resouces Control Board
  Phil Crader
  Division of Water Rights
- [x] Dept. of Toxic Substances Control
  CEQA Tracking Center
- [ ] Department of Pesticide Regulation
  CEQA Coordinator

Regional Water Quality Control Board (RWQCB)

- [ ] RWQCB 1
  Cathleen Hudson
  North Coast Region (1)
- [ ] RWQCB 2
  Environmental Document Coordinator
  San Francisco Bay Region (2)
- [ ] RWQCB 3
  Central Coast Region (3)
- [ ] RWQCB 4
  Teresa Rodgers
  Los Angeles Region (4)
- [ ] RWQCB 5S
  Central Valley Region (5)
- [ ] RWQCB 5F
  Central Valley Region (5)
  Fresno Branch Office
- [ ] RWQCB 5R
  Central Valley Region (5)
  Redding Branch Office
- [ ] RWQCB 6
  Lahontan Region (6)
- [ ] RWQCB 6V
  Lahontan Region (6)
  Victorville Branch Office
- [ ] RWQCB 7
  Colorado River Basin Region (7)
- [ ] RWQCB 8
  Santa Ana Region (8)
- [x] RWQCB 9
  San Diego Region (9)

- [ ] Other _____
  _____
  _____

- [ ] _____
  Conservancy

Last Updated 6/26/2012

NATIVE AMERICAN HERITAGE COMMISSION
915 CAPITOL MALL, ROOM 364
SACRAMENTO, CA 95814
(916) 653-6251
Fax (916) 657-5390
Web Site www.nahc.ca.gov
ds_nahc@pacbell.net

July 24, 2012

OTAY WATER DISTRICT
RECEIVED
2012 JUL 27 PM 2:53

Ms. Lisa Coburn-Boyd, Environmental Compliance Specialist
Otay Water District
2554 Sweetwater Springs Boulevard
Spring Valley, CA 91978-2004

Re: SCH#2012071069; CEQA Notice of Preparation (NOP); draft Environmental Impact Report (DEIR) for the **Otay Water District Wastewater Management Plan Update;** located in the northern portion of the Otay Water District; San Diego County, California.

Dear Ms. Coburn-Boyd:

The Native American Heritage Commission (NAHC), the State of California 'Trustee Agency' for the protection and preservation of Native American cultural resources pursuant to California Public Resources Code §21070 and affirmed by the Third Appellate Court in the case of EPIC v. Johnson (1985: 170 Cal App. 3rd 604).

This letter includes state and federal statutes relating to Native American historic properties of religious and cultural significance to American Indian tribes and interested Native American individuals as 'consulting parties' under both state and federal law. State law also addresses the freedom of Native American Religious Expression in Public Resources Code §5097.9

The California Environmental Quality Act (CEQA – CA Public Resources Code 21000-21177, amendments effective 3/18/2010) requires that any project that causes a substantial adverse change in the significance of an historical resource, that includes archaeological resources, is a 'significant effect' requiring the preparation of an Environmental Impact Report (EIR) per the CEQA Guidelines defines a significant impact on the environment as 'a substantial, or potentially substantial, adverse change in any of physical conditions within an area affected by the proposed project, including ...objects of historic or aesthetic significance." In order to comply with this provision, the lead agency is required to assess whether the project will have an adverse impact on these resources within the 'area of potential effect (APE), and if so, to mitigate that effect. The NAHC recommends that the lead agency request that the NAHC do a Sacred Lands File search as part of the careful planning for the proposed project.

The NAHC "Sacred Sites,' as defined by the Native American Heritage Commission and the California Legislature in California Public Resources Code §§5097.94(a) and 5097.96. Items in the NAHC Sacred Lands Inventory are confidential and exempt from the Public Records Act pursuant to California Government Code §6254 (r).

Early consultation with Native American tribes in your area is the best way to avoid unanticipated discoveries of cultural resources or burial sites once a project is underway. Culturally affiliated tribes and individuals may have knowledge of the religious and cultural significance of the historic properties in the project area (e.g. APE). We strongly urge that you

make contact with the list of Native American Contacts on the attached list of Native American contacts, to see if your proposed project might impact Native American cultural resources and to obtain their recommendations concerning the proposed project. Pursuant to CA Public Resources Code § 5097.95, the NAHC requests cooperation from other public agencies in order that the Native American consulting parties be provided pertinent project information. Consultation with Native American communities is also a matter of environmental justice as defined by California Government Code §65040.12(e). Pursuant to CA Public Resources Code §5097.95, the NAHC requests that pertinent project information be provided consulting tribal parties. The NAHC recommends *avoidance* as defined by CEQA Guidelines §15370(a) to pursuing a project that would damage or destroy Native American cultural resources and Section 2183.2 that requires documentation, data recovery of cultural resources.

Furthermore, the NAHC if the proposed project is under the jurisdiction of the statutes and regulations of the National Environmental Policy Act (e.g. NEPA; 42 U.S.C. 4321-43351). Consultation with tribes and interested Native American consulting parties, on the NAHC list, should be conducted in compliance with the requirements of federal NEPA and Section 106 and 4(f) of federal NHPA (16 U.S.C. 470 *et seq*), 36 CFR Part 800.3 (f) (2) & .5, the President's Council on Environmental Quality (CSQ, 42 U.S.C 4371 *et seq.* and NAGPRA (25 U.S.C. 3001-3013) as appropriate. The 1992 *Secretary of the Interiors Standards for the Treatment of Historic Properties* were revised so that they could be applied to all historic resource types included in the National Register of Historic Places and including cultural landscapes. Also, federal Executive Orders Nos. 11593 (preservation of cultural environment), 13175 (coordination & consultation) and 13007 (Sacred Sites) are helpful, supportive guides for Section 106 consultation. The aforementioned Secretary of the Interior's *Standards* include recommendations for all 'lead agencies' to consider the historic context of proposed projects and to "research" the cultural landscape that might include the 'area of potential effect.'

Confidentiality of "historic properties of religious and cultural significance" should also be considered as protected by California Government Code §6254(r) and may also be protected under Section 304 of he NHPA or at the Secretary of the Interior discretion if not eligible for listing on the National Register of Historic Places. The Secretary may also be advised by the federal Indian Religious Freedom Act (cf. 42 U.S.C., 1996) in issuing a decision on whether or not to disclose items of religious and/or cultural significance identified in or near the APEs and possibility threatened by proposed project activity.

Furthermore, Public Resources Code Section 5097.98, California Government Code §27491 and Health & Safety Code Section 7050.5 provide for provisions for inadvertent discovery of human remains mandate the processes to be followed in the event of a discovery of human remains in a project location other than a 'dedicated cemetery'.

To be effective, consultation on specific projects must be the result of an ongoing relationship between Native American tribes and lead agencies, project proponents and their contractors, in the opinion of the NAHC. Regarding tribal consultation, a relationship built around regular meetings and informal involvement with local tribes will lead to more qualitative consultation tribal input on specific projects.

Finally, when Native American cultural sites and/or Native American burial sites are prevalent within the project site, the NAHC recommends 'avoidance' of the site as referenced by CEQA Guidelines Section 15370(a).

If you have any questions about this response to your request, please do not hesitate to contact me at (916) 653-6251.

Sincerely,

Dave Singleton
Program Analyst

Cc: State Clearinghouse

Attachment: Native American Contact List

Native American Contact
San Diego County
July 24, 2012

Barona Group of the Capitan Grande
Edwin Romero, Chairperson
1095 Barona Road Diegueno
Lakeside , CA 92040
sue@barona-nsn.gov
(619) 443-6612
619-443-0681

Sycuan Band of the Kumeyaay Nation
Danny Tucker, Chairperson
5459 Sycuan Road Diegueno/Kumeyaay
El Cajon , CA 92019
ssilva@sycuan-nsn.gov
619 445-2613
619 445-1927 Fax

La Posta Band of Mission Indians
Gwendolyn Parada, Chairperson
PO Box 1120 Diegueno/Kumeyaay
Boulevard , CA 91905
gparada@lapostacasino.
(619) 478-2113
619-478-2125

Viejas Band of Kumeyaay Indians
Anthony R. Pico, Chairperson
PO Box 908 Diegueno/Kumeyaay
Alpine , CA 91903
jrothauff@viejas-nsn.gov
(619) 445-3810
(619) 445-5337 Fax

San Pasqual Band of Mission Indians
Allen E. Lawson, Chairperson
PO Box 365 Diegueno
Valley Center, CA 92082
allenl@sanpasqualband.com
(760) 749-3200
(760) 749-3876 Fax

Kumeyaay Cultural Historic Committee
Ron Christman
56 Viejas Grade Road Diegueno/Kumeyaay
Alpine , CA 92001
(619) 445-0385

Iipay Nation of Santa Ysabel
Virgil Perez, Spokesman
PO Box 130 Diegueno
Santa Ysabel, CA 92070
brandietaylor@yahoo.com
(760) 765-0845
(760) 765-0320 Fax

Campo Band of Mission Indians
Ralph Goff, Chairperson
36190 Church Road, Suite 1 Diegueno/Kumeyaay
Campo , CA 91906
chairgoff@aol.com
(619) 478-9046
(619) 478-5818 Fax

This list is current only as of the date of this document.

Distribution of this list does not relieve any person of the statutory responsibility as defined in Section 7050.5 of the Health and Safety Code, Section 5097.94 of the Public Resources Code and Section 5097.98 of the Public Resources Code.

This list is applicable for contacting local Native Americans with regard to cultural resources for the proposed SCH#2012071069; CEQA Notice of Preparation (NOP); draft Environmental Impact Report (DEIR) for the Otay Water District Wastewater Managment Plan Update; located in the Spring Valley area; San Diego County, California.

CALIFORNIA
Water Boards

EDMUND G. BROWN JR.
GOVERNOR

MATTHEW RODRIQUEZ
SECRETARY FOR
ENVIRONMENTAL PROTECTION

State Water Resources Control Board

JUL 27 2012

OTAY WATER DISTRICT
RECEIVED
2012 AUG -1 AM 11:49

Lisa Coburn-Boyd
Otay Water District
2554 Sweetwater Springs Boulevard
Spring Valley, CA 91978-2004

Dear Ms. Coburn-Boyd:

NOTICE OF PREPARATION (NOP); OTAY WATER DISTRICT (DISTRICT); OTAY WATER DISTRICT WASTEWATER MANAGEMENT PLAN UPDATE (PROJECT); SAN DIEGO COUNTY; STATE CLEARINGHOUSE NO. 2012071069

We understand that the District may be pursuing Clean Water State Revolving Fund (CWSRF) financing for this Project. As a funding agency and a state agency with jurisdiction by law to preserve, enhance, and restore the quality of California's water resources, the State Water Resources Control Board (State Water Board) is providing the following information for the environmental document prepared for the Project.

Please provide us with the following documents applicable to the proposed Project if seeking CWSRF or other State Water Board funding: (1) 1 copy of the draft and final EIR, (2) the resolution adopting the EIR and a Mitigation Monitoring and Reporting Program (MMRP) making California Environmental Quality Act (CEQA) findings, (3) all comments received during the review period and the District's response to those comments, (4) the adopted MMRP, and (5) the Notice of Determination filed with the San Diego Clerk and the Governor's Office of Planning and Research, State Clearinghouse. In addition, we would appreciate notices of any hearings or meetings held regarding environmental review of any projects to be funded by the State Water Board.

The CWSRF Program is partially funded by the United States Environmental Protection Agency and requires additional "CEQA-Plus" environmental documentation and review. Four enclosures are included that further explain the CWSRF Program environmental review process and the additional federal requirements. The State Water Board is required to consult directly with agencies responsible for implementing federal environmental laws and regulations. Any environmental issues raised by federal agencies or their representatives will need to be resolved prior to State Water Board approval of a CWSRF funding commitment for the proposed Project. For further information on the CWSRF Program, please contact Mr. Ahmad Kashkoli, at (916) 341-5855.

It is important to note that prior to a CWSRF funding commitment, projects are subject to provisions of the Federal Endangered Species Act (ESA), and must obtain Section 7 clearance from the United States Fish and Wildlife Service (USFWS), and/or National Marine Fisheries Service (NMFS) for any potential effects to special status species.

Please be advised that the State Water Board will consult with USFWS, and/or NMFS regarding all federal special status species that the Project has the potential to impact if the Project is to be funded under the CWSRF Program. The District will need to identify whether the Project will involve any direct effects from construction activities, or indirect effects such as growth inducement, that may affect federally listed threatened, endangered, or candidate species that are known, or have a potential to occur on-site, in the surrounding areas, or in the service area, and to identify applicable conservation measures to reduce such effects.

In addition, CWSRF projects must comply with federal laws pertaining to cultural resources, specifically Section 106 of the National Historic Preservation Act. The State Water Board has responsibility for ensuring compliance with Section 106 and the State Water Board must consult directly with the California State Historic Preservation Officer (SHPO). SHPO consultation is initiated when sufficient information is provided by the CWSRF applicant. The District must retain a consultant that meets the Secretary of the Interior's Professional Qualifications Standards (www.cr.nps.gov/local-law/arch_stnds_9.htm) to prepare a Section 106 compliance report.

Note that the District will need to identify the Area of potential Effects (APE), including construction and staging areas, and the depth of any excavation. The APE is three-dimensional and includes all areas that may be affected by the Project. The APE includes the surface area and extends below ground to the depth of any Project excavations. The records search request should be made for an area larger than the APE. The appropriate area varies for different projects but should be drawn large enough to provide information on what types of sites may exist in the vicinity.

Other federal requirements pertinent to the Project under the CWSRF Program include the following:

A. Compliance with the Federal Clean Air Act: (a) Provide air quality studies that may have been done for the Project; and (b) if the Project is in a nonattainment area or attainment area subject to a maintenance plan; (i) provide a summary of the estimated emissions (in tons per year) that are expected from both the construction and operation of the Project for each federal criteria pollutant in a nonattainment or maintenance area, and indicate if the nonattainment designation is moderate, serious, or severe (if applicable); (ii) if emissions are above the federal de minimis levels, but the Project is sized to meet only the needs of current population projections that are used in the approved State Implementation Plan for air quality, quantitatively indicate how the proposed capacity increase was calculated using population projections.

B. Compliance with the Coastal Zone Management Act: identify whether the Project is within a coastal zone and the status of any coordination with the California Coastal Commission.

C. Protection of Wetlands: Identify any portion of the proposed Project area that should be evaluated for wetlands or United States waters delineation by the United States Army Corps of Engineers (USACE), or requires a permit from the USACE, and identify the status of coordination with the USACE.

D. Compliance with the Farmland Protection Policy Act: Identify whether the Project will result in the conversion of farmland. State the status of farmland (Prime, Unique, or Local Statewide Importance) in the Project area and determine if this area is under a Williamson Act Contract.

E. Compliance with the Migratory Bird Treaty Act: List any birds protected under this Act that may be impacted by the Project and identify conservation measures to minimize impacts.

F. Compliance with the Flood Plain Management Act: Identify whether or not the Project is in a Flood Management Zone and include a copy of the Federal Emergency Management Agency flood zone maps for the area.

G. Compliance with the Wild and Scenic Rivers Act: Identify whether or not any Wild and Scenic Rivers would be potentially impacted by the Project and include conservation measures to minimize such impacts.

Thank you for the opportunity to review the District's NOP. If you have any questions or concerns about the State Water Board CWSRF Program environmental review process or the information provided in this letter, please feel free to contact me at (916) 341-5855, or by email at akashkoli@waterboards.ca.gov, or contact Ms. Michelle Helms at (916) 341-5686, or by email at mhelms@waterboards.ca.gov.

Sincerely,

Ahmad Kashkoli
Environmental Scientist
Division of Financial Assistance

Enclosures (4)

1. SRF & CEQA-Plus
2. Quick Reference Guide to CEQA Requirements for State Revolving Fund Loans
3. Instructions and Guidance for "Environmental Compliance Information"
4. Basic Criteria for Cultural Resources Reports

cc: State Clearinghouse
(Re: SCH# 2012071069)
P. O. Box 3044
Sacramento, CA 95812-3044

CLEAN WATER STATE REVOLVING FUND PROGRAM
INSTRUCTIONS AND GUIDANCE FOR
"ENVIRONMENTAL COMPLIANCE INFORMATION"

Introduction:

The State Water Resources Control Board (State Water Board) uses the California Environmental Quality Act (CEQA) review process and compliance with federal environmental laws and regulations to satisfy the environmental requirements of the Clean Water State Revolving Fund (CWSRF) Program Operating Agreement between the United States Environmental Protection Agency (USEPA) and the State Water Board. The CWSRF Program is partially funded by a capitalization grant from the USEPA. The issuance of funds from the CWSRF Program is equivalent to a federal action, and thus, compliance with federal environmental laws and regulations is required for projects being funded under the CWSRF Program.

All CWSRF Program applicants must submit adequate and complete environmental documentation to the State Water Board. Following submittal of an applicant's environmental documents, the State Water Board will review the documents to determine if the information is sufficient to document compliance with the CWSRF Program environmental requirements, including making a determination if consultation with federal authorities is required, and may request additional environmental information, when needed. The State Water Board encourages all applicants to initiate early consultation, so that the State Water Board can better streamline the environmental review process.

CEQA Information:

All projects coming to the State Water Board for funding are considered "projects" under CEQA because of the State Water Board's discretionary decision to approve funding.

Detailed information, including CEQA statutes and guidelines can be found online at the California Natural Resources Agency website at http://ceres.ca.gov/ceqa. A CEQA Process Flowchart that shows interaction points between lead and responsible agencies can be found at http://ceres.ca.gov/topic/env_law/ceqa/flowchart/index.html. In addition, State Water Board environmental staff is available to answer questions about the CEQA process, as well as the CWSRF Program environmental requirements. Please contact your assigned Project Manager at the State Water Board, regarding contact information for the appropriate environmental staff.

CEQA requires full disclosure of all aspects of the project, including impacts and mitigation measures that are not only regulated by state agencies, but also by federal agencies. Early consultation with state and federal agencies in the CEQA process will assist in minimizing changes to the project when funding is being requested from the State Water Board.

The types of CEQA documents that may apply to an applicant's project include one or a combination of the following: 1) Notice of Exemption (NOE); 2) Initial Study and Negative Declaration (ND); 3) Initial Study and Mitigated Negative Declaration (MND) with a Mitigation Monitoring and Reporting Program (MMRP); 4) Environmental Impact Report (EIR) with an MMRP; and/or 5) Addendum, Supplemental and Subsequent ND, MND or EIR. The applicant must determine the appropriate document for its project and submit the supporting information listed under the applicable section of the Environmental Package Checklist for Applicant (Attachment 1), along with a completed copy of the Evaluation Form for Environmental Review and Federal Coordination (Attachment 2). Please submit two copies of all CEQA documents.

The applicant must ensure the CEQA document is specific to the project for which funding is being requested. Program or Master Plan EIRs may not be suitable for satisfying the State Water Board environmental requirements if these documents are not project-specific. When an applicant uses an Addendum, Supplemental or Subsequent CEQA document for a project, the associated Program or Master Plan EIR must also be submitted, especially if the Addendum, Supplemental or Subsequent CEQA document includes references to pertinent environmental and mitigation information contained in the Program or Master Plan EIR.

If the applicant is using a CEQA document that is older than five years, the applicant must re-evaluate environmental and project conditions, and develop and submit an updated environmental document (such as an Addendum, Supplemental or Subsequent CEQA document) based on the results of that re-evaluation. The updated environmental document must be circulated through the State Clearinghouse for public review. The applicant must adopt the final updated environmental document, including any new identified measures, make CEQA findings, and file a Notice of Determination (NOD) with the local county clerk(s) and the Governor's Office of Planning and Research, State Clearinghouse (State Clearinghouse).

Each applicant, if it is a public agency, is responsible for approving the CEQA documents it uses regardless of whether or not it is a lead agency under CEQA. Non-profit organizations shall only be responsible for approving and ensuring implementation of the applicable project mitigation measures identified in the MMRP. All public agencies applying for CWSRF Program funding shall file either an NOE or an NOD with the State Clearinghouse and the local county clerk(s). Date stamped copies of those notices must be submitted with all the applicable environmental documents.

If the CEQA document was jointly prepared by a federal public governmental agency to satisfy the National Environmental Policy Act (NEPA) requirements, then the applicant must submit the corresponding NEPA documents, including a Finding of No Significant Impact, or a Record of Decision completed by the federal NEPA lead agency.

Federal Information:

In addition to CEQA compliance, the State Water Board is required to document environmental compliance with federal environmental laws and regulations, including:

1. Federal Endangered Species Act (ESA), Section 7:

The United States Department of the Interior, Fish and Wildlife Service (USFWS) and the United States Department of Commerce National Oceanic and Atmospheric Administration, National Marine Fisheries Service (NMFS) must be consulted for any project that will have the potential to adversely impact a federal special-status species. The USEPA delegated the State Water Board to act as the non-federal lead for initiating informal Section 7 ESA consultation with the USFWS. The State Water Board will coordinate with the USEPA for projects requiring formal Section 7 ESA consultation with the USFWS and projects that will impact federal special-status fish species under the NMFS jurisdiction. The USFWS and NMFS must provide written concurrence prior to a CWSRF financing agreement. USFWS and NMFS comments may include conservation measures, for which the applicant's CWSRF financing agreement will be conditioned to ensure compliance.

For further information on the federal ESA law, regulation, policy, and notices, go to http://www.fws.gov/endangered/laws-policies/index.html and http://www.nmfs.noaa.gov/pr/laws/esa/. Note that compliance with both the state and federal ESAs is required of projects having the potential to impact state and federal special-status species. Although overlap exists between the state and federal ESAs, there might be additional or more restrictive state requirements. For further information on the state ESA, refer to the California Department of Fish and Game website at http://www.dfg.ca.gov/habcon/cesa/.

2. Magnuson-Stevens Fishery Conservation and Management Act, Essential Fish Habitat (EFH):

The Magnuson-Stevens Fishery Conservation and Management Act, as amended, is designed to manage and conserve national fishery resources. EFH consultations are only required for actions that may adversely effect EFH. The applicant needs to determine whether the proposed project may adversely affect EFH. NMFS is responsible for publishing maps and other information on the locations of designated EFH, and can provide information on ways to promote conservation of EFHs to facilitate this assessment. If a project may adversely affect a designated EFH, the applicant must complete an EFH consultation.

The State Water Board will coordinate with the USEPA to request an EFH consultation from the NMFS. NMFS is required to respond informally or in writing. NMFS comments may include conservation measures, for which the applicant's CWSRF financing agreement will be conditioned to ensure compliance. For more information, see the brochure at http://www.nmfs.noaa.gov/sfa/reg_svcs/Council%20stuff/council%20orientation/2007/2007TrainingCD/TabT-EFH/EFH_CH_Handout_Final_3107.pdf.

3. National Historic Preservation Act (NHPA), Section 106:

The NHPA focuses on federal compliance. Section 106 requires Federal agencies to take into account the effects of their undertakings on historic properties. The Section 106 process seeks to accommodate historic preservation concerns with the needs of Federal undertakings through consultation among the agency official and other parties with an interest in the effects of the undertaking on historic properties. The goal of consultation is to identify historic properties potentially affected by the undertaking, assess its effects and seek ways to avoid, minimize or mitigate any adverse effects on historic properties. The Section 106 compliance efforts and reports must be prepared by a qualified researcher that meets the Secretary of the Interior's Professional Qualifications Standards (www.cr.nps.gov/local-law/arch_stnds_9.htm).

In addition, CEQA requires that impacts to cultural and historic resources be analyzed. The "CEQA and Archeological Resources" section from the Governor's Office of Planning and Research CEQA Technical Advice Series states that the lead agency obtains a current records search from the appropriate California Historical Resources Information System Center. Also, to contact the Native American tribes that are culturally affiliated with a project area from the list obtained from the Native American Heritage Commission (NAHC).

The NAHC can be contacted at:

915 Capitol Mall, Room 364
Sacramento, CA 95814
Tele: (916) 653-4082

4. Clean Air Act:

For CWSRF financed projects, we recommend including a general conformity section in the CEQA documents so that another public review process will not be needed, should a conformity determination be required. The applicant should check with its local air quality management district and review the Air Resources Board California air emissions map for information on the State Implementation Plan. For information on the analysis steps involved in evaluating conformity, please contact the State Water Board environmental staff through the assigned Project Manager.

5. Coastal Zone Management Act:

Projects proposing construction in the Coastal Zone will require consultation with either the California Coastal Commission (or the designated local agency with a Local Coastal Program), or the San Francisco Bay Conservation and Development Commission (for projects located in the San Francisco Bay area). The applicant must submit a copy of the approved Coastal Development permit to the State Water Board to satisfy this requirement.

For more information on Coastal Zone Management Act requirements refer to the following agencies websites:

- United States Coastal Zone Boundaries through the NMFS website at http://coastalmanagement.noaa.gov/mystate/docs/StateCZBoundaries.pdf;
- California Coastal Commission website at http://www.coastal.ca.gov/ccatc.html; and/or
- San Francisco Bay Conservation and Development Commission website at http://www.bcdc.ca.gov/.

6. Coastal Barriers Resources Act:

The Coastal Barriers Resources Act is intended to discourage development in the Coastal Barrier Resources System and adjacent wetlands, marshes, estuaries, inlets, and near-shore waters. Since there is no designated Coastal Barrier Resources System in California, no impacts from California projects are expected. However, should the applicant believe there may be impacts to the Coastal Barrier Resources System due to special circumstances, please use the following information as a guide.

During the planning process, the applicant should consult with the appropriate Coastal Zone management agency (e.g., City or County with an approved Local Coastal Program, the California Coastal Commission, or the San Francisco Bay Conservation and Development Commission) to determine if the project will have an effect on the Coastal Barrier Resources System. If the project will have an effect on the Coastal Barrier Resources System, the State Water Board must consult with the appropriate Coastal Zone management agency and the USFWS. Any recommendations from the Coastal Zone management agency and USFWS will be incorporated into the project's design prior to approval of CWSRF financing.

For more information and to ensure that no modifications to Coastal Barrier Resources System have occurred, please visit: http://www.fws.gov/CBRA/.

7. Farmland Protection Policy Act:

Projects involving impacts to farmland designated as prime and unique, local and statewide importance, or under a Williamson Act Contract, will require consultation with the United States Department of Agriculture, Natural Resources Conservation Service and/or California Department of Conservation. For more information on the Farmland Protection Policy Act go to http://www.nrcs.usda.gov/programs/fppa, and regarding the Williamson Act Contact go to http://www.consrv.ca.gov/dlrp/lca.

8. Floodplain Management – Executive Order 11988:

Each agency shall take action to reduce the risk of flood loss, to minimize the impact of floods on human safety, health and welfare, and to restore and preserve the natural and beneficial values served by floodplains in carrying out its responsibilities. Before taking an action, each agency shall determine whether the proposed action will occur in a designated floodplain. The generally established standard for risk is the flooding level that is expected to occur every 100 years. If an agency determines or proposes to, conduct, support, or allow an action to be located in a floodplain, the agency shall consider alternatives to avoid adverse effects and incompatible development in the floodplains.

For further information regarding Floodplain Management requirements, please consult the United States Department of Homeland Security, Federal Emergency Management Agency website at http://www.fema.gov, as well as the USEPA floodplain management Executive Order 11988 at http://www.epa.gov/owow/wetlands/regs/eo11988.html.

9. Migratory Bird Treaty Act (MBTA):

The MBTA restricts the killing, taking, collecting and selling or purchasing of native bird species or their parts, nests, or eggs. The MBTA, along with subsequent amendments to this act, provides legal protection for almost all breeding bird species occurring in the United States and must be addressed under CEQA. In the CEQA document, each agency must make a finding that a project will comply with the MBTA. For further information, please consult the Migratory Bird Program through the USFWS website at http://www.fws.gov/laws/lawsdigest/migtrea.html.

10. Protection of Wetlands – Executive Order 11990:

Projects, regardless of funding, must get approval for any temporary or permanent disturbance to federal and state waters, wetlands, and vernal pools. The permitting process through the United States Army Corps of Engineers (USACE) can be lengthy, and may ultimately require project alterations to avoid wetlands and waters of the United States. Applicants must consult with the USACE early in the planning process if any portion of the project site contains wetlands, or other federal waters. The USACE Wetland Delineation Manual is available at http://www.wetlands.com/regs/tlpge02e.htm. Also note that the California State Water Boards are involved in providing approvals through the Clean Water Act Section 401 Water Quality Certification Program and/or Waste Discharge Requirements. For more information, please go to http://www.waterboards.ca.gov/water_issues/programs/cwa401/index.shtml.

11. Wild and Scenic Rivers Act:

There are construction restrictions or prohibitions for projects near or in a designated "wild and scenic river." A listing of designated "wild and scenic rivers" can be obtained at http://www.rivers.gov/rivers/california.php. Watershed information can be obtained through the "Watershed Browser" at http://cwp.resources.ca.gov/map_tools.php.

12. Safe Drinking Water Act, Source Water Protection:

Projects must comply with the Safe Drinking Water Act and document whether or not a project has the potential to contaminate a sole source aquifer. For projects impacting a listed sole source aquifer, the applicant must identify an alternative project location, or develop adequate mitigating measures in consultation with the USEPA. For more information, please go to the Sole Source Aquifer Program website at http://epa.gov/region09/water/groundwater/ssa.html.

13. Environmental Justice – Executive Order No. 12898:

Identify and address any disproportionately high and adverse human health or environmental effects of the project's activities on minority and low-income populations. USEPA has defined environmental justice as "the fair treatment and meaningful involvement of all people regardless of race, color, national origin, or income with respect to the development, implementation, and enforcement of environmental laws, regulations, and policies."

Fair Treatment means that no group of people should bear a disproportionate burden of environmental harms and risks, including those resulting from the negative consequences of industrial, governmental, and commercial operations or programs and policies.

Meaningful Involvement means that: 1) potentially affected community members have an appropriate opportunity to participate in decisions about a proposed activity that will affect their environment and/or health; 2) the public's contribution can influence the agency's decision; 3) the concerns of all participants involved will be considered in the decision-making process; and 4) the decision-makers seek out and facilitate the involvement of those potentially affected.

The term "environmental justice concern" is used to indicate the actual or potential lack of fair treatment or meaningful involvement of minority, low-income, or indigenous populations, or tribes in the development, implementation, and enforcement of environmental laws, regulations, and policies.

Your project may involve an "environmental justice concern" if the project could:

a) Create new disproportionate impacts on minority, low-income, or indigenous populations;
b) Exacerbate existing disproportionate impacts on minority, low-income, or indigenous populations; or
c) Present opportunities to address existing disproportionate impacts on minority, low-income, or indigenous populations that are addressable through the project.

Attachment 1

ENVIRONMENTAL[1] PACKAGE CHECKLIST FOR APPLICANT (What to Submit to Project Manager)

Required for all CWSRF Projects:

- ❑ **Evaluation Form for Environmental Review and Federal Coordination with the substantiating information** (i.e. USFWS species list/biological assessment, cultural resources documentation, air quality data, flood map etc.)
- ❑ **Project Report, Scope of Work and Map(s)**

Based on the type of CEQA documents prepared for the project, provide additional information as identified in the following boxes.

If project is covered under a **CEQA Categorical or Statutory Exemption**, submit a copy of the following:

- ❑ **Notice of Exemption** (filed and date stamped by the county clerk and the Governor's Office of Planning and Research)

If project is covered under a **Negative Declaration**, submit a copy of the following:

- ❑ **Draft and Final Initial Study/Negative Declaration (IS/ND)**
  - ❑ Comments and Responses to the Draft IS/ND
- ❑ **Resolution approving the CEQA documents**
  - ❑ Adopting the Negative Declaration
  - ❑ Making CEQA Findings
- ❑ **Notice of Determination** (filed and date stamped by the county clerk and the Governor's Office of Planning and Research)

If project is covered under a **Mitigated Negative Declaration**, submit a copy of the following:

- ❑ **Draft and Final Initial Study/Mitigated Negative Declaration (IS/MND)**
  - ❑ Comments and Responses to the Draft IS/MND
  - ❑ Mitigation Monitoring and Reporting Plan/Program (MMRP)
- ❑ **Resolution approving the CEQA documents**
  - ❑ Adopting the Mitigated Negative Declaration and the MMRP
  - ❑ Making CEQA Findings
- ❑ **Notice of Determination** (filed and date stamped by the county clerk and the Governor's Office of Planning and Research)

If project is covered under an **Environmental Impact Report (EIR)**, submit a copy of the following:

- ❑ **Draft and Final EIR**
  - ❑ Comments and Responses to the Draft EIR
  - ❑ Mitigation Monitoring and Reporting Plan/Program (MMRP)
- ❑ **Resolution approving the CEQA documents**
  - ❑ Certifying the EIR and adopting the MMRP
  - ❑ Making CEQA Findings
  - ❑ Adopting a Statement of Overriding Considerations for any adverse environmental impact(s), if applicable
- ❑ **Notice of Determination** (filed and date stamped by the county clerk and the Governor's Office of Planning and Research)

If EIR is a joint CEQA/National Environmental Policy Act document (EIR/Environmental Impact Statement or EIR/Environmental Assessment), submit the applicable Record of Decision and/or the Finding of No Significant Impact.

---

[1] If the CEQA document is more than five years old applicant shall provide an updated CEQA document (eg. subsequent, supplemental, or addendum CEQA documents) or a letter that describes the current status of the environmental condition for the project's location.

State Water Resources Control Board (State Water Board)
Clean Water State Revolving Fund Program

Evaluation Form for Environmental Review and Federal Coordination

CWSRF No.: _____
Applicant Name: _____
Date: _____
Project Title: _____

1. **Federal Endangered Species Act (ESA), Section 7:**
Does the project involve any direct effects from construction activities, or indirect effects such as growth inducement that may affect federally listed threatened or endangered species or their critical habitat that are known, or have a potential, to occur on-site, in the surrounding area, or in the service area?

   a. **Required documents: Attach project-level biological surveys, evaluations analyzing the project's direct and indirect effects on special-status species, and an up-to-date species list (from the United States Fish and Wildlife Service and the California Natural Diversity Database) for the project area.**

☐ No. Discuss why the project will not impact any federally listed special status species:

_____

☐ Yes. Provide information on federally listed species that could potentially be affected by this project and any proposed avoidance and compensation measures so that the State Water Board can initiate informal/formal consultation with the applicable federally designated agency. Document any previous ESA consultations that may have occurred for the project. Include any comments below:

_____

2. **<u>Magnuson-Stevens Fishery Conservation and Management Act, Essential Fish Habitat</u>: Does the project involve any direct effects from construction activities, or indirect effects such as growth inducement that may adversely affect essential fish habitat?**

☐ No. Discuss why the project will not impact essential fish habitat:

☐ Yes. Provide information on essential fish habitat that could potentially be affected by this project and any proposed avoidance and compensation measures. Document any consultations with the National Marine Fisheries Service that may have occurred for the project. Include any comments below:

3. **<u>National Historic Preservation Act, Section 106</u>: Identify the area of potential effects (APE), including construction, staging areas, and depth of any excavation. (Note: the APE is three dimensional and includes all areas that may be affected by the project, including the surface area and extending below ground to the depth of any project excavations).**

- **Required documents: Cultural Resources Assessment** prepared by a prepared by a qualified researcher that meets the Secretary of the Interior's Professional Qualifications Standards (www.cr.nps.gov/local-law/arch_stnds_9.htm). **Current records search** with maps showing all sites and surveys drawn in relation to the project area, and records of **Native American consultation.** Include any comments below:

4. **Federal Clean Air Act:**
Identify Air Basin Name _____
Name of the Local Air District for Project Area: _____

Is the project subject to a State Implementation Plan (SIP) conformity determination?

☐ No. The project is in an attainment or unclassified area for all federal criteria pollutants.

☐ Yes. The project is in a nonattainment area or attainment area subject to maintenance plans for a federal criteria pollutant. Include information to indicate the nonattainment designation (e.g. moderate, serious, severe, or extreme), if applicable. If estimated emissions (below) are above the federal de minimis levels, but the project is sized to meet only the needs of current population projections that are used in the approved SIP for air quality, then quantitatively indicate how the proposed capacity increase was calculated using population projections.

- **If you checked "Yes" above, provide the estimated project construction and operational air emissions (in tons per year) in the chart below, and attach supporting calculations.**
- **Also, attach any air quality studies that may have been done for the project.**

Pollutant	Federal Status (Attainment, Nonattainment, Maintenance, or Unclassified)	Nonattainment Rates (i.e., moderate, serious, severe, or extreme)	Threshold of Significance for Project Air Basin (if applicable)	Construction Emissions (Tons/Year)	Operation Emissions (Tons/Year)
Ozone (O_3)					
Carbon Monoxide (CO)					
Oxides of Nitrogen (NO_x)					
Reactive Organic Gases (ROG)					
Volatile Organic Compounds (VOC)					
Lead (Pb)					
Particulate Matter less than 2.5 microns in diameter ($PM_{2.5}$)					
Particulate Matter less than 10 microns in diameter (PM_{10})					
Sulfur Dioxide (SO_2)					

5. **Coastal Zone Management Act:**
Is any portion of the project site located within the coastal zone?

☐ No. The project is not within the coastal zone.

☐ Yes. Describe the project location with respect to coastal areas and the status of the coastal zone permit, and provide a copy of the coastal zone permit or coastal exemption:

_____
_____
_____
_____
_____
_____

6. **Coastal Barriers Resources Act:**
Will the project impact or be located within or near the Coastal Barrier Resources System or its adjacent wetlands, marshes, estuaries, inlets, and near-shore waters? Note that since there is currently no Coastal Barrier Resources System in California, projects located in California are not expected to impact the Coastal Barrier Resources System in other states. If there is a special circumstance in which the project may impact a Coastal Barrier Resource System, indicate your reasoning below.

☐ No. The project will not impact or be located within or near the Coastal Barrier Resources System or its adjacent wetlands, marshes, estuaries, inlets, and near-shore waters.

☐ Yes. Describe the project location with respect to the Coastal Barrier Resources System, and the status of any consultation with the appropriate Coastal Zone management agency and the United States Fish and Wildlife Service:

_____
_____
_____
_____

7. **Farmland Protection Policy Act:**
Is any portion of the project located on important farmland?

☐ No. The project will not impact farmland.

☐ Yes. Include information on the acreage that would be converted from important farmland to other uses. Indicate if any portion of the project boundaries is under a Williamson Act Contract and specify the amount of acreage affected:

_____
_____
_____
_____
_____

8. **Flood Plain Management:**
Is any portion of the project located within a 100-year floodplain as depicted on a floodplain map or otherwise designated by the Federal Emergency Management Agency?

- **Required documents: Attach a floodplain map.**

☐ No. Provide a description of the project location with respect to streams and potential floodplains:

_____

☐ Yes. Describe the floodplain, and include a floodplains/wetlands assessment. Describe any measures and/or project design modifications that would be implemented to minimize or avoid project impacts:

_____
_____
_____
_____

9. **Migratory Bird Treaty Act:**
Will the project affect protected migratory birds that are known, or have a potential, to occur on-site, in the surrounding area, or in the service area?

☐ No. Provide an explanation below.

_____
_____
_____
_____

☐ Yes. Discuss the impacts (such as noise and vibration impacts, modification of habitat) to migratory birds that may be directly or indirectly affected by the project and mitigation measures to reduce or eliminate these impacts. Include a list of all migratory birds that could occur where the project is located:

_____
_____
_____
_____

10. **Protection of Wetlands:**
Does any portion of the project boundaries contain areas that should be evaluated for wetland delineation or require a permit from the United States Army Corps of Engineers?

☐ No. Provide the basis for such a determination:

_____
_____
_____
_____

☐ Yes. Describe the impacts to wetlands, potential wetland areas, and other surface waters, and the avoidance, minimization, and mitigation measures to reduce such impacts. Provide the status of the permit and information on permit requirements:

_____
_____
_____
_____

11. **Wild and Scenic Rivers Act:**
Identify watershed where the project is located: _____

Is any portion of the project located within a wild and scenic river?

☐ No. The project is not located near a wild and scenic river.

☐ Yes. Identify the wild and scenic river watershed and project location relative to the affected wild and scenic river:

_____
_____
_____
_____

12. **Safe Drinking Water Act, Sole Source Aquifer Protection:**
Is the project located in an area designated by the United States Environmental Protection Agency, Region 9, as a Sole Source Aquifer?

☐ No. The project is not within the boundaries of a sole source aquifer.

☐ Yes. Contact USEPA, Region 9 staff to consult, and identify the sole source aquifer (e.g., Santa Margarita Aquifer, Scott's Valley, the Fresno County Aquifer, the Campo/Cottonwood Creek Aquifer or the Ocotillo-Coyote Wells Aquifer) that will be impacted:

_____

_____

13. **Environmental Justice:**
Does the project involve an activity that is likely to be of particular interest to or have particular impact upon minority, low-income, or indigenous populations, or tribes?

☐No. Selecting "No" means that this action is not likely to be of any particular interest to or have an impact on these populations or tribes. Explain.

_____

_____

_____

_____

_____

☐Yes. If you answer yes, please check at least one of the boxes and provide a brief explanation below:

☐ The project is likely to impact the health of these populations.

☐ The project is likely to impact the environmental conditions of these populations.

☐ The project is likely to present an opportunity to address an existing disproportionate impact of these populations.

☐ The project is likely to result in the collection of information or data that could be used to assess potential impacts on the health or environmental conditions of these populations.

☐ The project is likely to affect the availability of information to these populations.

☐ Other reasons, describe: _____

_____

_____

_____

_____

_____

_____

BASIC CRITERIA FOR CULTURAL RESOURCES REPORTS

FOR SECTION 106 CONSULTATION WITH THE STATE HISTORIC PRESERVATION OFFICER (SHPO) UNDER THE NATIONAL HISTORIC PRESERVATION ACT (NHPA)

CULTURAL RESOURCES REPORTS

The Section 106 compliance efforts and reports must be prepared by a qualified researcher that meets the Secretary of the Interior's Professional Qualifications Standards (www.cr.nps.gov/local-law/arch_stnds_9.htm).

REPORT TERMINOLOGY

- A cultural resources report used for Section 106 consultation should use terminology consistent with the NHPA.

- This doesn't mean that the report needs to "filled" with passages and interpretations of the regulations, the SHPO reviewer already knows the law.

- If "findings" are made they must be one of the four "findings" listed in Section 106. These include:

  "No historic properties affected" (no properties are within the APE, including the below ground APE).

  "No effect to historic properties" (properties may be near the APE but the project will not impact them).

  "No adverse effect to historic properties" (the project may affect historic properties but the impacts will not be adverse)

  "Adverse effect to historic properties". *Note: the SHPO must be consulted at this point. If your consultant proceeds on his own, his efforts may be wasted.*

CURRENT RECORDS SEARCH INFORMATION

- A current (less than a year old) records search from the appropriate Information Center is necessary. The records search should include maps that show all recorded sites and surveys in relation to the area of potential effects (APE) for the project.

- The APE is three-dimensional and includes all areas that may be affected by the project. It includes the surface area and extends below ground to the depth of any project excavations.

- The records search request should be made for an area larger than the APE. The appropriate area varies for different projects but should be drawn large enough to provide information on what types of sites may exist in the vicinity.

NATIVE AMERICAN AND INTERESTED PARTY CONSULTATION

- Native American and interested party consultation should be initiated at the beginning of any cultural resource investigations. The purpose is to gather information from people with local knowledge that may be used to guide research.

- A project description and map should be sent to the Native American Heritage Commission (NAHC) requesting a check of their Sacred Lands Files. The Sacred Lands Files include religious and cultural places that are not recorded at the information centers.

- The NAHC will include a list of Native American groups and individuals with their response. A project description and maps should be sent to everyone on the list asking for information on the project area.

- Similar letters should be sent to local historical organizations.

- Follow-up contact should be made by phone if possible and a phone log should be included in the report.

WARNING PHRASES IN ALREADY PREPARED CEQA REPORTS

- A finding of **"no known resources"**, this doesn't mean anything. The consultant's job is to find out if there are resources within the APE or to explain why they are not present.

- **"The area is sensitive for buried archaeological resources",** followed by a statement that **"monitoring is recommended as mitigation".** Monitoring is not an acceptable mitigation. A reasonable effort should be made to find out if buried resources are present in the APE.

- **"The area is already disturbed by previous construction",** this may be true, but documentation is still needed to show that the new project will not affect cultural resources. As an example, an existing road can be protecting a buried archaeological site. Or, previous construction may have impacted an archaeological site that was never documented.

- No mention of **"Section 106"**, a report that gives adequate information for CEQA may not be sufficient to comply with Section 106.

S:\Funding Programs\Environmental Review Unit\Outreach\BASIC CRITERIA FOR SECTION 106 revised June 13 2012 by md.doc

VALLE DE ORO COMMUNITY PLANNING GROUP
SUBCOMMITTEE REPORT RE:
NOTICE OF PREPARATION FOR THE SPEIR TO THE OWD 2010 PROGRAM EIR
August 2, 2012

1. County General Plan (recently updated) should be used to determine projected growth in unincorporated areas – not SANDAG forecasts which we have found to contain significant errors and unsupportable assumptions.

2. All three alternatives involve possible expansion of the Rancho San Diego (RSD) Pump Station, but no mention is made of the growth-inducement mitigation that was required prior to its construction and operation in the Jamacha basin. This mitigation was implemented by County Policy I-107 and the County General Plan which restrict the use of this facility as a sewage conveyance to only areas within the Urban Limit Line established by the County and depicted on their General Plan maps.

   Nothing has changed that would invalidate the need for or appropriateness of this growth-inducement mitigation.

3. Under Alternative 1:
   a. Decommissioning the wastewater recycling facility may shift significant wastewater flows that Otay has developed outside of the Urban Limit Line to the Rancho San Diego pump facility. Such a shift would violate County Government Policy, the County General Plan, and would violate State environmental laws by ignoring the growth-inducement mitigation required to build and operate the pump station.

   b. Given its location in the U.S. Wildlife Refuge and adjacent to highly sensitive riparian-woodland habitat, any "required" RSD Pump Station improvements (expansion) would probably produce significant unmitigable impacts to sensitive biological resources.

   c. It is our understanding that the RSD Pump Station is owned and operated by County Government and any modifications or expansion would require land-use approvals from County Government.

4. Under Alternative 2:
   a. Possible doubling of the wastewater recycling facility capacity is included in this Alternative. Given the facility's location in a highly sensitive habitat area of the U.S. Wildlife Refuge, such expansion of the facility could result in significant unmitigable impacts to sensitive biological resources.

b. Also included is the addition of handling/treating solid waste onsite. Such an additional use would probably require further expansion of the facility footprint and worsen the direct impacts to sensitive biological resources. Additional impacts to humans and wildlife may also occur due to noxious odors (inherent in processing such solid waste) and possible contamination-laden dust or contaminated storm-water entering the Sweetwater riparian floodplain or nearby upland habitat areas.

c. The comments of 3.b & 3.c regarding the RSD Pump Station also apply to this Alternative.

5. Under Alternative 3:
   a. Possible tripling of the wastewater recycling facility capacity and the addition of handling/treating solid waste onsite is included in this Alternative. Thus, all of the above comments in 3.b, 3.c, 4.a, and 4.b apply to this alternative with the possibility of even greater impacts in each case.

   b. A recycling facility expansion of this magnitude would negate the ability of the RSD Pump Station to function as an emergency back-up in case of a major failure of the recycling facility. This would significantly increase the risk of a major sewer spill into the Sweetwater River basin and ultimately Sweetwater Lake.

   c. This Alternative clearly states an intent to "Expand to Accept Wastewater From Other Service Areas." This expansion intent coupled with use of the RSD Pump Station as additional capacity, would project growth-inducing urban sewer infrastructure throughout the rural areas of the Jamacha Basin, Jamul, and Crest/Dehesa/Harbison Canyon. Its use would indicate a District policy of unmitigated growth inducement into the County's rural land-use areas and inappropriate and unauthorized use of the RSD Pump Station. This Alternative will have significant and unmitigable growth-inducement impacts.

Jack L. Phillips, Chairman VDOCPG

OTAY WATER DISTRICT
RECEIVED
2012 AUG 17

Department of Toxic Substances Control

Matthew Rodriquez
Secretary for
Environmental Protection

Deborah O. Raphael, Director
5796 Corporate Avenue
Cypress, California 90630

Edmund G. Brown Jr.
Governor

August 14, 2012

Ms. Lisa Coburn-Boyd
Otay Water District
2554 Sweetwater Springs Boulevard
Spring Valley, California 91978-2004

NOTICE OF PREPARATION (NOP) FOR A DRAFT SUPPLEMENTAL PROGRAM ENVIRONMENTAL REPORT FOR THE OTAY WATER DISTRICT WASTEWATER MANAGEMENT PLAN UPDATE PROJECT (SCH#2012071069), SAN DIEGO COUNTY

Dear Ms. Coburn-Boyd:

The Department of Toxic Substances Control (DTSC) has received your submitted Notice of Preparation of a Draft Supplemental Program Environmental Impact Report (SPEIR) for the above-mentioned project. The following project description is stated in your document:

"The purpose of the Otay Water District (OWD) Waste water Management Plan (WWMP) is to supplement the 2009 Water Management Plan Update (WRMP), identify and evaluate current wastewater facilities (e.g., wastewater pumping stations and treatment plants), design feasible wastewater management strategies that allow the OWD to meet projected future wastewater needs within the OWD planning area and adjacent areas of influence, and to develop a phased and systematic approach to implement the wastewater management strategies during future time frames. The WWMP currently consists of several wastewater alternatives with differing project features and components."

Based on the review of the submitted document DTSC has the following comments:

1) The SPEIR should evaluate whether conditions within the Project area may pose a threat to human health or the environment. Following are the databases of some of the regulatory agencies:

   - National Priorities List (NPL): A list maintained by the United States Environmental Protection Agency (U.S.EPA).

- EnviroStor (formerly CalSites): A Database primarily used by the California Department of Toxic Substances Control, accessible through DTSC's website (see below).

- EnviroStor (formerly CalSites): A Database primarily used by the California Department of Toxic Substances Control, accessible through DTSC's website (see below).

- Resource Conservation and Recovery Information System (RCRIS): A database of RCRA facilities that is maintained by U.S. EPA.

- Comprehensive Environmental Response Compensation and Liability Information System (CERCLIS): A database of CERCLA sites that is maintained by U.S.EPA.

- Solid Waste Information System (SWIS): A database provided by the California Integrated Waste Management Board which consists of both open as well as closed and inactive solid waste disposal facilities and transfer stations.

- GeoTracker: A List that is maintained by Regional Water Quality Control Boards.

- Local Counties and Cities maintain lists for hazardous substances cleanup sites and leaking underground storage tanks.

- The United States Army Corps of Engineers, 911 Wilshire Boulevard, Los Angeles, California, 90017, (213) 452-3908, maintains a list of Formerly Used Defense Sites (FUDS).

2) The SPEIR should identify the mechanism to initiate any required investigation and/or remediation for any site within the proposed Project area that may be contaminated, and the government agency to provide appropriate regulatory oversight. If necessary, DTSC would require an oversight agreement in order to review such documents.

3) Any environmental investigations, sampling and/or remediation for a site should be conducted under a Workplan approved and overseen by a regulatory agency that has jurisdiction to oversee hazardous substance cleanup. The findings of any investigations, including any Phase I or II Environmental Site Assessment Investigations should be summarized in the document. All sampling results in which hazardous substances were found above regulatory standards should be clearly summarized in a table. All closure, certification or remediation approval reports by regulatory agencies should be included in the SPEIR.

4) If buildings, other structures, asphalt or concrete-paved surface areas are being planned to be demolished, an investigation should also be conducted for the presence of other hazardous chemicals, mercury, and asbestos containing materials (ACMs). If other hazardous chemicals, lead-based paints (LPB) or products, mercury or ACMs are identified, proper precautions should be taken during demolition activities. Additionally, the contaminants should be remediated in compliance with California environmental regulations and policies.

5) Future project construction may require soil excavation or filling in certain areas. Sampling may be required. If soil is contaminated, it must be properly disposed and not simply placed in another location onsite. Land Disposal Restrictions (LDRs) may be applicable to such soils. Also, if the project proposes to import soil to backfill the areas excavated, sampling should be conducted to ensure that the imported soil is free of contamination.

6) Human health and the environment of sensitive receptors should be protected during any construction or demolition activities. If necessary, a health risk assessment overseen and approved by the appropriate government agency should be conducted by a qualified health risk assessor to determine if there are, have been, or will be, any releases of hazardous materials that may pose a risk to human health or the environment.

7) If the project site was used for agricultural, livestock or related activities, onsite soils and groundwater might contain pesticides, agricultural chemical, organic waste or other related residue. Proper investigation, and remedial actions, if necessary, should be conducted under the oversight of and approved by a government agency at the site prior to construction of the project.

8) If it is determined that hazardous wastes are, or will be, generated by the proposed operations, the wastes must be managed in accordance with the California Hazardous Waste Control Law (California Health and Safety Code, Division 20, Chapter 6.5) and the Hazardous Waste Control Regulations (California Code of Regulations, Title 22, Division 4.5). If it is determined that hazardous wastes will be generated, the facility should also obtain a United States Environmental Protection Agency Identification Number by contacting (800) 618-6942. Certain hazardous waste treatment processes or hazardous materials, handling, storage or uses may require authorization from the local Certified Unified Program Agency (CUPA). Information about the requirement for authorization can be obtained by contacting your local CUPA.

9) DTSC can provide cleanup oversight through an Environmental Oversight Agreement (EOA) for government agencies that are not responsible parties, or a Voluntary Cleanup Agreement (VCA) for private parties. For additional information on the EOA or VCA, please see

www.dtsc.ca.gov/SiteCleanup/Brownfields, or contact Ms. Maryam Tasnif-Abbasi, DTSC's Voluntary Cleanup Coordinator, at (714) 484-5489.

If you have any questions regarding this letter, please contact Rafiq Ahmed, Project Manager, at rahmed@dtsc.ca.gov, or by phone at (714) 484-5491.

Sincerely,

Rafiq Ahmed
Project Manager
Brownfields and Environmental Restoration Program

cc: Governor's Office of Planning and Research
State Clearinghouse
P.O. Box 3044
Sacramento, California 95812-3044
state.clearinghouse@opr.ca.gov.

CEQA Tracking Center
Department of Toxic Substances Control
Office of Environmental Planning and Analysis
P.O. Box 806
Sacramento, California 95812
Attn: Nancy Ritter
nritter@dtsc.ca.gov

CEQA # 3621

State of California -The Natural Resources Agency
DEPARTMENT OF FISH AND GAME
South Coast Region
3883 Ruffin Road
San Diego, CA 92123
(858) 467-4201
http://www.dfg.ca.gov

EDMUND G. BROWN JR., Governor
CHARLTON H. BONHAM, Director

2012 AUG 20 PM 12: 24
OTAY WATER DISTRICT
RECEIVED

August 17, 2012

Ms. Lisa Coburn-Boyd
Otay Water District
2554 Sweetwater Springs Boulevard
Spring Valley, CA 91978-2004

Subject: Comments on the Notice of Preparation of a Draft Environmental Impact Report (DEIR) for the Otay Water District Wastewater Management Plan Update (SCH# 2012071069)

Dear Ms. Coburn-Boyd:

The Department of Fish and Game (Department) has reviewed the above-referenced Notice of Preparation (NOP) for the Otay Water District Wastewater Management Plan Update Draft Environmental Impact Report (DEIR). The following statements and comments have been prepared pursuant to the Department's authority as Trustee Agency with jurisdiction over natural resources affected by the project (California Environmental Quality Act, [CEQA] Guidelines §15386) and pursuant to our authority as a Responsible Agency under CEQA Guidelines section 15381 over those aspects of the proposed project that come under the purview of the California Endangered Species Act (Fish and Game Code §2050 *et seq.*) and Fish and Game Code section 1600 *et seq.* The Department also administers the Natural Community Conservation Planning (NCCP) program. Otay Water District (OWD) has prepared a draft NCCP Subarea Plan (SAP) under the Joint Water Agencies Subregional Plan; these plans are currently under review by the Department and the U.S. Fish and Wildlife Service.

The purpose of the OWD Wastewater Management Plan (WWMP) is to supplement the 2009 Water Resources Management Plan Update (WRMP) on which the Department provided comments (Department of Fish and Game and United States Fish and Wildlife Service joint letter dated September 3, 2009). The WWMP will identify and evaluate current wastewater facilities and design feasible wastewater management strategies in order to meet projected future wastewater needs within the OWD planning area. The WWMP consists of three alternatives including: eliminating all wastewater treatment within the OWD Service Area, recycling all wastewater flows within the OWD Service Area, and recycling all wastewater flows within the OWD Service Area plus expanding to accept wastewater from other service areas.

The Department offers the following comments and recommendations to assist OWD in avoiding or minimizing potential impacts to biological resources.

Specific Comments

1. The DEIR should adequately address how the WWMP relates to any approved NCCP Subarea Plans (San Diego County, City of San Diego, and City of Chula Vista) and OWD's draft SAP.

2. Although the document will be prepared as a Program DEIR, we recommend including as much specificity as possible. This includes, but is not limited to, identifying and

quantifying (to the extent possible) any direct, indirect, or cumulative impacts to sensitive species or habitat types that could be associated with each of the alternatives, as well as identifying the mitigation that would be required to offset those impacts. This will allow the Department to provide useful feedback prior to the subsequent environmental review required for future wastewater projects.

General Comments

1. The Department has responsibility for wetland and riparian habitats. It is the policy of the Department to strongly discourage development in wetlands or conversion of wetlands to uplands. We oppose any development or conversion which would result in a reduction of wetland acreage or wetland habitat values, unless, at a minimum, project mitigation assures there will be "no net loss" of either wetland habitat values or acreage. Development and conversion include but are not limited to conversion to subsurface drains, placement of fill or building of structures within the wetland, and channelization or removal of materials from the streambed. All wetlands and watercourses, whether intermittent or perennial, should be retained and provided with substantial setbacks which preserve the riparian and aquatic values and maintain their value to on-site and off-site wildlife populations. Mitigation measures to compensate for impacts to mature riparian habitats must be included in the DEIR. The DEIR should also analyze potential effects wildlife movement corridors and identify measures to avoid, minimize, and mitigate such effects.

   a) If the project area supports aquatic, riparian, or wetland habitats, a jurisdictional delineation of the creeks and their associated riparian habitats should be included in the DEIR. The delineation should be conducted pursuant to the U. S. Fish and Wildlife Service wetland definition adopted by the Department.[1] Please note that some wetland and riparian habitats subject to the Department's authority may extend beyond the jurisdictional limits of the U.S. Army Corps of Engineers.

   b) The Department also has regulatory authority over activities in streams and/or lakes that will divert or obstruct the natural flow, or change the bed, channel, or bank (which may include associated riparian resources) of a river or stream, or use material from a streambed. For any such activities, the project applicant (or "entity") must provide written notification to the Department pursuant to section 1600 et seq. of the Fish and Game Code. Based on this notification and other information, the Department determines whether a Lake and Streambed Alteration Agreement (LSA) with the applicant is required prior to conducting the proposed activities. The Department's issuance of a LSA for a project that is subject to CEQA will require CEQA compliance actions by the Department as a Responsible Agency. The Department as a Responsible Agency under CEQA may consider the local jurisdiction's (lead agency) Negative Declaration or Environmental Impact Report for the project. To minimize additional requirements by the Department pursuant to section 1600 et seq. and/or under CEQA, the document should fully identify the potential impacts to the stream or riparian resources and provide adequate avoidance, mitigation, monitoring and reporting commitments for issuance of the LSA.[2]

---

[1] Cowardin, Lewis M., et al. 1979. Classification of Wetlands and Deepwater Habitats of the United States. U.S. Department of the Interior, Fish and Wildlife Service.

[2] A notification package for a LSA may be obtained by accessing the Department's web site at www.dfg.ca.gov/1600 .

2. The following comment applies until OWD's NCCP SAP is approved and take authorization is granted for the species covered by the plan. The Department considers adverse impacts to a species protected by the California Endangered Species Act (CESA), for the purposes of CEQA, to be significant without mitigation. As to CESA, take of any endangered, threatened, or candidate species that results from the project is prohibited, except as authorized by state law (Fish and Game Code, §§ 2080, 2085.) Consequently, if the Project, Project construction, or any Project-related activity during the life of the Project will result in take of a species designated as endangered or threatened, or a candidate for listing under CESA, the Department recommends that the project proponent seek appropriate take authorization under CESA prior to implementing the project. Appropriate authorization from the Department may include an incidental take permit (ITP) or a consistency determination in certain circumstances, among other options (Fish and Game Code §§ 2080.1, 2081, subds. (b),(c)). Early consultation is encouraged, as significant modification to a project and mitigation measures may be required in order to obtain a CESA Permit. Revisions to the Fish and Game Code, effective January 1998, may require that the Department issue a separate CEQA document for the issuance of an ITP unless the project CEQA document addresses all project impacts to CESA-listed species and specifies a mitigation monitoring and reporting program that will meet the requirements of an ITP. For these reasons, biological mitigation monitoring and reporting proposals should be of sufficient detail and resolution to satisfy the requirements for a CESA ITP.

3. To enable the Department to adequately review and comment on the proposed project from the standpoint of the protection of plants, fish and wildlife, we recommend that the following information be included in the DEIR.

   a) A complete discussion of the purpose and need for, and description of, the proposed project, including all staging areas and access routes to the construction and staging areas.

   b) A range of feasible alternatives to ensure that alternatives to the proposed project are fully considered and evaluated; the alternatives should avoid or otherwise minimize impacts to sensitive biological resources. Specific alternative locations should be evaluated in areas with lower resource sensitivity where appropriate.

<u>Biological Resources within the Project's Area of Potential Effect</u>

4. To provide a complete assessment of the flora and fauna within and adjacent to the project area, with particular emphasis upon identifying endangered, threatened, sensitive, and locally unique species and sensitive habitats, the DEIR should include the following information.

   a) Per CEQA Guidelines, section 15125(c), information on the regional setting that is critical to an assessment of environmental impacts, with special emphasis should be placed on resources that are rare or unique to the region.

   b) A thorough assessment of rare plants and rare natural communities, following the Department's *Protocols for Surveying and Evaluating Impacts to Special Status Native Plant Populations and Natural Communities* (see: http://www.dfg.ca.gov/habcon/plant/) (hard copy available on request).

c) A current inventory of the biological resources associated with each habitat type on site and within the area of potential effect. The Department's California Natural Diversity Data Base in Sacramento should be contacted at (916) 322-2493 or www.dfg.ca.gov /biogeodata/ to obtain current information on any previously reported sensitive species and habitat, including Significant Natural Areas identified under Chapter 12 of the Fish and Game Code.

d) An inventory of rare, threatened, and endangered, and other sensitive species on site and within the area of potential effect. Species to be addressed should include all those which meet the CEQA definition (see CEQA Guidelines, §15380). This should include sensitive fish, wildlife, reptile, and amphibian species. Seasonal variations in use of the project area should also be addressed. Focused species-specific surveys, conducted at the appropriate time of year and time of day when the sensitive species are active or otherwise identifiable, are required. Acceptable species-specific survey procedures should be developed in consultation with the Department and the U.S. Fish and Wildlife Service.

Analyses of the Potential Project-Related Impacts on the Biological Resources

5. To provide a thorough discussion of direct, indirect, and cumulative impacts expected to adversely affect biological resources, with specific measures to offset such impacts, the following should be addressed in the DEIR.

a) A discussion of potential adverse impacts from lighting, noise, human activity, exotic species, and drainage should be included. The latter subject should address: project-related changes on drainage patterns on and downstream of the project site; the volume, velocity, and frequency of existing and post-project surface flows; polluted runoff; soil erosion and/or sedimentation in streams and water bodies; and post-project fate of runoff from the project site. The discussions should also address the proximity of the extraction activities to the water table, whether dewatering would be necessary, and the potential resulting impacts on the habitat, if any, supported by the groundwater. Mitigation measures proposed to alleviate such impacts should be included.

b) Discussions regarding indirect project impacts on biological resources, including resources in nearby public lands, open space, adjacent natural habitats, riparian ecosystems, and any designated and/or proposed or existing reserve lands (e.g., preserve lands associated with a NCCP). Impacts on, and maintenance of, wildlife corridor/movement areas, including access to undisturbed habitats in adjacent areas, should be fully evaluated in the DEIR.

c) The zoning of areas for development projects or other uses that are nearby or adjacent to natural areas may inadvertently contribute to wildlife-human interactions. A discussion of possible conflicts and mitigation measures to reduce these conflicts should be included in the environmental document.

d) A cumulative effects analysis should be developed as described under CEQA Guidelines, section 15130. General and specific plans, as well as past, present, and anticipated future projects, should be analyzed relative to their impacts on similar plant communities and wildlife habitats.

Mitigation for the Project-related Biological Impacts

6. The DEIR should include measures to fully avoid and otherwise protect Rare Natural Communities (Attachment) from project-related impacts. The Department considers these communities as threatened habitats having both regional and local significance.

7. The DEIR should include mitigation measures for adverse project-related impacts to sensitive plants, animals, and habitats. Mitigation measures should emphasize avoidance and reduction of project impacts. For unavoidable impacts, on-site habitat restoration or enhancement should be discussed in detail. If on-site mitigation is not feasible or would not be biologically viable and therefore not adequately mitigate the loss of biological functions and values, off-site mitigation through habitat creation and/or acquisition and preservation in perpetuity should be addressed.

8. For proposed preservation and/or restoration, the DEIR should include measures to perpetually protect the targeted habitat values from direct and indirect negative impacts. The objective should be to offset the project-induced qualitative and quantitative losses of wildlife habitat values. Issues that should be addressed include restrictions on access, proposed land dedications, monitoring and management programs, control of illegal dumping, water pollution, increased human intrusion, etc.

9. In order to avoid impacts to nesting birds, the DEIR should require that clearing of vegetation, and when biologically warranted construction, occur outside of the peak avian breeding season which generally runs from February 1 through September 1 (as early as January for some raptors). If project construction is necessary during the bird breeding season a qualified biologist with experience in conducting bird breeding surveys should conduct weekly bird surveys for nesting birds, within three days prior to the work in the area, and ensure no nesting birds in the project area would be impacted by the project. If an active nest is identified, a buffer shall be established between the construction activities and the nest so that nesting activities are not interrupted. The buffer shall be a minimum width of 300 feet (500 feet for raptors), shall be delineated by temporary fencing, and shall remain in effect as long as construction is occurring or until the nest is no longer active. No project construction shall occur within the fenced nest zone until the young have fledged, are no longer being fed by the parents, have left the nest, and will no longer be impacted by the project.

10. The Department generally does not support the use of relocation, salvage, and/or transplantation as mitigation for impacts to rare, threatened, or endangered species. Studies have shown that these efforts are experimental in nature and largely unsuccessful.

11. Plans for restoration and revegetation should be prepared by persons with expertise in southern California ecosystems and native plant revegetation techniques. Each plan should include, at a minimum: (a) the location of the mitigation site; (b) the plant species to be used, container sizes, and seeding rates; (c) a schematic depicting the mitigation area; (d) planting schedule; (e) a description of the irrigation methodology; (f) measures to control exotic vegetation on site; (g) specific success criteria; (h) a detailed monitoring program; (i) contingency measures should the success criteria not be met; and (j) identification of the party responsible for meeting the success criteria and providing for conservation of the mitigation site in perpetuity.

We appreciate the opportunity to comment on the above referenced NOP. Questions regarding this letter and further coordination on these issues should be directed to Kyle Dutro at (858) 467-4267 or kdutro@dfg.ca.gov.

Sincerely,

Stephen M. Juarez
Environmental Program Manager
South Coast Region

Enclosure
Sensitivity of Top Priority Rare Natural Communities in Southern California

cc: State Clearinghouse, Sacramento

Sensitivity of Top Priority Rare Natural Communities in Southern California

Sensitivity rankings are determined by the Department of Fish and Game, California Natural Diversity Data Base and based on either number of known occurrences (locations) and/or amount of habitat remaining (acreage). The three rankings used for these top priority rare natural communities are as follows:

S1.# Fewer than 6 known locations and/or on fewer than 2,000 acres of habitat remaining.

S2.# Occurs in 6-20 known locations and/or 2,000-10,000 acres of habitat remaining.

S3.# Occurs in 21-100-known locations and/or 10,000-50,000 acres of habitat remaining.

The number to the right of the decimal point after the ranking refers to the degree of threat posed to that natural community regardless of the ranking. For example:

S1.1 = very threatened
S2.2 = threatened
S3.3 = no current threats known

Sensitivity Rankings (February 1992)

Rank	Community Name
S1.1	Mojave Riparian Forest
	Sonoran Cottonwood Willow Riparian
	Mesquite Bosque
	Elephant Tree Woodland
	Crucifixion Thorn Woodland
	Allthorn Woodland
	Arizonan Woodland
	Southern California Walnut Forest
	Mainland Cherry Forest
	Southern Bishop Pine Forest
	Torrey Pine Forest
	Desert Mountain White Fir Forest
	Southern Dune Scrub
	Southern Coastal Bluff Scrub
	Maritime Succulent Scrub
	Riversidean Alluvial Fan Sage Scrub
	Southern Maritime Chaparral
	Valley Needlegrass Grassland
	Great Basin Grassland
	Mojave Desert Grassland
	Pebble Plains
	Southern Sedge Bog
	Cismontane Alkali Marsh

S1.2	Southern Foredunes Mono Pumice Flat Southern Interior Basalt Flow Vernal Pool
S2.1	Venturan Coastal Sage Scrub Diegan Coastal Sage Scrub Riversidean Upland Coastal Sage Scrub Riversidean Desert Sage Scrub Sagebrush Steppe Desert Sink Scrub Mafic Southern Mixed Chaparral San Diego Mesa Hardpan Vernal Pool San Diego Mesa Claypan Vernal Pool Alkali Meadow Southern Coastal Salt Marsh Coastal Brackish Marsh Transmontane Alkali Marsh Coastal and Valley Freshwater Marsh Southern Arroyo Willow Riparian Forest Southern Willow Scrub Modoc-Great Basin Cottonwood Willow Riparian Modoc-Great Basin Riparian Scrub Mojave Desert Wash Scrub Engelmann Oak Woodland Open Engelmann Oak Woodland Closed Engelmann Oak Woodland Island Oak Woodland California Walnut Woodland Island Ironwood Forest Island Cherry Forest Southern Interior Cypress Forest Bigcone Spruce-Canyon Oak Forest
S2.2	Active Coastal Dunes Active Desert Dunes Stabilized and Partially Stabilized Desert Dunes Stabilized and Partially Stabilized Desert Sandfield Mojave Mixed Steppe Transmontane Freshwater Marsh Coulter Pine Forest Southern California Fellfield White Mountains Fellfield
S2.3	Bristlecone Pine Forest Limber Pine Forest

Otay Water District WWMP SPEIR Agency Comments

Agency	Date	Comment(s)	Addressed in EIR Chapter
State Water Resources Control Board	July 27, 2012	(Potential) Additional Environmental Review for Clean Water State Revolving Fund (CWSRF) = "CEQA Plus," Section 7 surveys, and Section 106 Report.	The project does not anticipate at this time to use the Clean Water State Revolving Fund for the 2012 WRMP Update, if these funds are needed for individual projects additional environmental review comments will be implemented as needed.
California Department of Fish and Game	August 17, 2012	1. DEIR should address how the WWMP relates to any approved Natural Community Conservation Planning (NCCP) Subarea Plans (City of SD, SD County, City of Chula Vista) and OWD's draft SAP. 2. Even though this will be a Program EIR, the Department recommends as much specificity as possible. Identify and quantify any direct, indirect, or cumulative impacts to sensitive species/habitats associated with each alternative, as well as identifying mitigation. 3. The Department opposes development or conversion of wetlands unless project mitigation assures "no net loss" of wetlands habitat values or acreage. If impacts to mature wetlands would occur, mitigation measures to reduce impacts must be included in DEIR. a. A jurisdictional delineation would be required if project area	Biological impacts have been addressed in Section 4.2 Biological Resources

		supports aquatic, riparian, and wetland habitats. b. If project will divert or obstruct, change the bed, channel or bank of a river or stream, then applicant must give notice to Department pursuant to section 1600 et seq. of Fish and Game Code. This may require a Lake and Streambed Alteration Agreement (LSA), subject to CEQA compliance. 4. If the project would result in the taking of a CESA species, then consultation with the Department is required. Issuance of an incidental take permit (ITP) may be required. The CEQA document should have sufficient and detailed biological mitigation monitoring and reporting procedures to satisfy the requirements for a CESA ITP. *may not apply once OWD's NCCP SAP is approve* 5. The DEIR should include an assessment and inventory of rare plants and communities, biological resources, and all rare, threatened and endangered species within he project's area of potential effect. Focused species-specific surveys would be required. 6. Proper analysis of potential project-related impacts to Bio. Resources (see letter for specifics). 7. Proper mitigation for potential project-related Bio. Impacts (see letter for specifics).	

California Department of Toxic Substances Control	August 14, 2012	1. The SPEIR should evaluate whether conditions within the Project area would pose a threat to human health or the environment. A regulatory agency database list was provided for research. 2. The SPEIR should address how any site investigations/remediation would be initiated if a site was contaminated. 3. Any site investigations, sampling, or remediation will be under agency oversight and then any findings should be included in the document. 4. Proper demolition, soil excavation would be followed with agency oversight.	Impacts associated with public health and safety have been addressed in Section 4.10 Public Safety
California Native American Heritage Commission	July 24, 2012	1. The lead agency is required to assess whether the project will have an adverse impact on historical / archeological resources within the area of potential effect (APE), and if so, mitigate those impacts. 2. The NAHC recommends that the lead agency request that the NAHC do a Sacred Lands File search as part of project planning. 3. The NAHC urges the lead agency to make contact with the tribes on the Native American Contacts list provided.	Impacts associated with cultural resources have been addressed in Section 4.3 Cultural

Otay Water District WWMP SPEIR Non-Agency Comments

Non-Agency	Date	Comment(s)	Addressed in EIR Chapter
Valle de Oro Community Planning Group	August 2, 2012	1. SANDAG forecasts have been found to contain significant errors and unsupportable comments. 2. Three of the four alternatives involve possible expansion of the Rancho San Diego Pump Station with no mention of growth-induced mitigation required prior to its construction and operation. 3. Decommissioning the wastewater recycling facility may shift significant wastewater flows to the Rancho San Diego Pump Station located in a U.S. Wildlife Refuge and adjacent to a highly sensitive riparian-woodland habitat. 4. Possible doubling of the wastewater recycling facility capacity located in a highly sensitive habitat area of the U.S. Wildlife Refuge could result in significant impacts to sensitive biological resources. In addition, the handling/treating of solid waste onsite probably requires further expansion of the facility footprint and worsens the direct impacts to sensitive biological resources. Impacts to humans and wildlife may also occur due to noxious odors inherent in processing such solid waste and possible contamination of the Sweetwater riparian floodplain or upland habitat areas. 5. Possible tripling of the wastewater recycling facility capacity located in a	1. The OWD falls entirely within the local regulatory jurisdiction of SANDAG. Local Regulatory Framework is addressed in Section 4.0 2. Impacts associated with construction have been addressed in Section 4.8 Land Use and Planning 3. Biological impacts have been addressed in Section 4.2 Biological Resources 4. Biological impacts have been addressed in Section 4.2 Biological Resources. Water Quality impacts have been addressed in Section 4.6 Hydrology and Water Quality. Public Safety impacts have been addressed in Section 4.10 Public Safety.

			highly sensitive habitat area of the U.S. Wildlife Refuge could result in significant impacts to sensitive biological resources. In addition, the handling/treating of solid waste onsite probably requires further expansion of the facility footprint and worsens the direct impacts to sensitive biological resources. Impacts to humans and wildlife may also occur due to noxious odors inherent in processing such solid waste and possible contamination of the Sweetwater riparian floodplain or upland habitat areas. Expansion to accept wastewater from other service areas coupled with use of the Rancho San Diego Pump Station for added capacity would project growth-induced urban sewer infrastructure into the County's rural land-use areas.	5. Biological impacts have been addressed in Section 4.2 Biological Resources. Water Quality impacts have been addressed in Section 4.6 Hydrology and Water Quality. Land use and construction impacts have been addressed in Section 4.8 Land Use and Planning. Public Safety impacts have been addressed in Section 4.10 Public Safety.

ATTACHMENT F

Imagine the result

Mitigation Monitoring and Reporting Program

Final SPEIR for the Otay Water District 2013 Wastewater Management Plan

SCH No. 2012071069

June 2013

INTRODUCTION

The California Environmental Quality Act (CEQA) requires that public agencies adopting EIRs ("Lead Agencies") take affirmative steps to determine that project design features (PDFs), standard construction practices (SCPs) and approved mitigation/performance measures are implemented subsequent to project approval. The Lead Agency must adopt a reporting and monitoring program for the PDFs, SCPs and mitigation/performance measures incorporated into a project or included as conditions of approval. The program must be designed to ensure compliance with the EIR during project implementation (Public Resources Code §20181.6; CEQA Guidelines §15074(d)).

This Mitigation Monitoring and Reporting Program (MMRP) will be used by the Otay Water District (OWD) as Lead Agency to ensure compliance with the PDFs, SCPs and mitigation/performance measures identified in the Final Program Environmental Impact Report (PEIR) for the 2009 Water Resources Master Plan (WRMP) Update and incorporated by reference in the Supplemental Program Environmental Impact Report (SPEIR) for the 2013 Wastewater Management Plan. Implementation of these PDFs, SCPs and mitigation/performance measures will reduce significant impacts to air quality and global climate change; biological resources; cultural resources; geology, soils, and paleontology; hydrology and water quality; landform alteration and visual aesthetics; land use and planning; noise; and public safety.

This MMRP consists of a checklist (Table 1) that identifies the PDFs, SCPs and mitigation/performance measures by resource; the person(s) responsible for verifying implementation; the timing of verification (prior to, during or after construction); and the parties responsible for implementation. Space is provided for sign-off following completion/implementation of the PDFs, SCPs and mitigation/performance measures.

This page intentionally left blank.

Table 1. 2013 Wastewater Management Plan Supplemental PEIR Mitigation Monitoring and Reporting Program

Design Feature or Mitigation No.	Design Feature or Mitigation Measure	Person(s) to Verify	Timing of Verification			Responsible Party	Completed		Comments	Resp. Team Member	Spec Section or Dwg No.	Verified in Contract by	Comments
			Pre Const	During Const	Post Const		Initials	Date					
Air Quality and Global Climate Change													
Air-SCP-1	During grading and site preparation activities, the On-site Construction Supervisor will supervise the following activities to reduce fugitive dust emissions: · Exposed soil areas will be watered as necessary (at least twice per day) to prevent dust emissions. During windy days or when fugitive dust can be observed leaving construction sites, additional applications of water will be required. Under windy conditions where wind velocities are forecast to exceed 25 miles per hour, all ground disturbing activities will be halted until the winds are forecast to be less than 25 miles per hour. · Where visible soil material is carried onto adjacent public paved roads, the paved roads will be swept at the end of the day to avoid vehicles from pulverizing the dirt into fine particles. · Trucks transporting materials to and from the site will have at least two feet of freeboard (i.e., minimum vertical distance between the top of the load and the top of the trailer). Alternatively, trucks transporting materials will be covered.	On-site Construction Supervisor		X		Contractor							
Air-SCP-2	All equipment utilized for the construction of CIP projects will be maintained, tuned, and operated in accordance with all relevant standards.	On-site Construction Supervisor	X	X		Contractor							
Mitigation Measure Air-1	An air quality technical study shall be prepared for each CIP project once the project reaches the design stage to determine whether potential air pollutant emissions associated with construction activities are within the screening thresholds established by the San Diego Air Pollution Control District. All recommendations and measures identified in the air quality technical study to ensure that air pollutant emissions remain within established thresholds shall be incorporated into project design prior to any groundbreaking activities.	OWD	X			Engineering Design							

Design Feature or Mitigation No.	Design Feature or Mitigation Measure	Person(s) to Verify	Timing of Verification			Responsible Party	Completed		Comments	Resp. Team Member	Spec Section or Dwg No.	Verified in Contract by	Comments
			Pre Const	During Const	Post Const		Initials	Date					
Air-SCP-3	During project construction activities, the On-site Construction Supervisor will supervise the following Best Management Practices (BMPs) to reduce emissions associated with diesel equipment: · Properly operate and maintain all diesel-powered vehicles and equipment. · Retrofit diesel-powered equipment with “after-treatment” products (e.g., diesel oxidation catalysts, diesel particulate filters). · Use electric or natural gas-powered construction equipment in lieu of gasoline or diesel-powered engines. · Turn off all diesel-powered vehicles and gasoline-powered equipment when not in use for more than five minutes. · Support and encourage ridesharing and transit incentives for the construction crew. · Encourage the use of locally-available building materials, such as concrete, stucco, and interior finishes. · Use light-colored or a high-albedo (reflectivity) concrete and asphalt paving materials with a Solar Reflectance Index of 29 or higher. · Establish a construction management plan with the local waste hauler that diverts a minimum of 50% of construction, demolition, and site clearing waste.	On-site Construction Supervisor		X		Contractor							

Design Feature or Mitigation No.	Design Feature or Mitigation Measure	Person(s) to Verify	Timing of Verification			Responsible Party	Completed		Comments	Resp. Team Member	Spec Section or Dwg No.	Verified in Contract by	Comments
			Pre Const	During Const	Post Const		Initials	Date					
Biological Resources													
Bio-SCP-1	After completion of final grading for CIP projects located adjacent to native vegetation, the construction documents will require that all graded areas within 100 feet of native vegetation are hydroseeded and/or planted with native plant species similar in composition to the adjacent undisturbed vegetation communities. OWD or the construction contractor will retain a qualified biologist to monitor these activities to ensure nonnative or invasive plant species are not used in the hydroseed mix or planting palettes. The hydroseeded/planted areas will be watered via a temporary drip irrigation system or watering truck. Irrigation will cease at some time after successful plant establishment and growth, to be determined by the biologist. No fertilizers or pesticides will be used in the hydroseeded/planted areas. Any irrigation runoff from hydroseeded/planted areas will be directed away from adjacent native vegetation communities, and contained and/or treated within the development footprint of individual projects. All planting stock will be inspected for exotic invertebrate pests (e.g., argentine ants) and any stock found to be infested with such pests will not be allowed to be used in the hydroseeded/planted areas.	Biologist			X	Landscape Contractor							
Performance Measure Bio-1A	During the design phase of CIP projects, OWD shall retain a qualified biologist to conduct biological surveys as part of the “tiered” CEQA documentation for these projects.	OWD	X			Biologist							
Performance Measure Bio-1B	If the biological surveys identified in performance measure Bio-1A determine the presence of special-status species and/or sensitive or critical habitats on or adjacent to the CIP project site, then OWD shall map and quantify the impacts in a Biological Technical Report as part of the “tiered” CEQA documentation referenced in Bio-1A. Detailed project-specific avoidance and mitigation measures for significant impacts to biological resources shall be negotiated between OWD and the regulatory agencies, as part of the approval and certification process for the subsequent CEQA documentation. In addition, the following measures shall be implemented, as applicable:	OWD	X			Biologist							

Design Feature or Mitigation No.	Design Feature or Mitigation Measure	Person(s) to Verify	Timing of Verification			Responsible Party	Completed		Comments	Resp. Team Member	Spec Section or Dwg No.	Verified in Contract by	Comments
			Pre Const	During Const	Post Const		Initials	Date					
	Six (6) weeks prior to vegetation clearing, grading and/or construction activities that are scheduled to occur between February 15 and August 30, a qualified biologist shall commence focused surveys in accordance with U.S. Fish & Wildlife Service (USFWS) protocols to determine the presence or absence of the California gnatcatcher. Documentation of the survey results shall be provided to OWD and USFWS within 45 days of completing the final survey, as required pursuant to Federal Endangered Species Act (FESA) Section 10(a)(1)(A). If the survey results are negative, then no further mitigation for California gnatcatcher is necessary and vegetation clearing can occur at any time in the year following the survey; only mitigation for the habitat loss shall be required (refer to Bio-1B(iv) below). If surveyed habitat is determined to be occupied by California gnatcatcher, then the following measures shall be implemented:												
Performance Measure Bio-1B	Coastal sage scrub/gnatcatcher habitat shall not be removed during the gnatcatcher breeding season (February 15 through August 30). Work that has commenced prior to the breeding season shall be allowed to continue without interruption. If gnatcatchers move into an area within 500 feet of ongoing construction noise levels and attempt to nest, then it can be deduced that the noise is not great enough to discourage gnatcatcher nesting activities. If work begins prior to the breeding season, the contractor(s) should maintain continuous construction activities adjacent to coastal sage scrub that falls within 500 feet, until the work is completed. However, if clearing, grading and/or construction activities are scheduled to begin during the gnatcatcher breeding season, then updated pre-construction surveys are necessary as defined above. In addition, if these activities are initiated prior to, and extend into, the breeding season, but they cease for any period of time and the contractor wishes to restart work within the breeding season window, then updated pre-construction surveys are also necessary. If these surveys indicate no nesting birds occur within the coastal sage scrub that falls within 500 feet of the proposed work, then the adjacent construction activities shall be allowed to commence. However, if the birds are observed nesting within these areas,	OWD	X			Biologist							

Design Feature or Mitigation No.	Design Feature or Mitigation Measure	Person(s) to Verify	Timing of Verification			Responsible Party	Completed		Comments	Resp. Team Member	Spec Section or Dwg No.	Verified in Contract by	Comments
			Pre Const	During Const	Post Const		Initials	Date					
	then the adjacent construction activities shall be postponed until all nesting has ceased.												
Mitigation Measure Bio-1B	Noise monitoring shall be conducted if construction activities are scheduled during the gnatcatcher breeding season; if the construction-related noise levels would exceed 60 dB L_{eq} (i.e., the noise threshold suggested by the USFWS for indirect impacts to gnatcatcher); and if gnatcatchers are found within 500 feet of the noise source. Noise monitoring shall be conducted by a biologist experienced in both the vocalization and appearance of California gnatcatcher, and in the use of noise meters. Construction activities that generate noise levels over 60 dB L_{eq} may be permitted within 300 feet of occupied habitat if methods are employed that reduce the noise levels to below 60 dB L_{eq} at the boundary of occupied habitat (e.g., temporary noise attenuation barriers or use of alternative equipment). During construction activities, daily testing of noise levels shall be conducted by a noise monitor with the help of the biologist to ensure that a noise level of 60 dB L_{eq} at the boundary of occupied habitat is not exceeded. Documentation of the noise monitoring results shall be provided to OWD and USFWS within 45 days of completing the final noise monitoring event.	OWD, USFWS		X		Biologist, Noise monitor							
Mitigation Measure Bio-1B	If the biological surveys identified in performance measure Bio-1A determine the presence of special-status species and/or sensitive or critical habitats on or adjacent to the CIP project site, then the following measures shall be implemented, as applicable: Ten (10) days prior to vegetation clearing, grading and/or construction activities that are scheduled to occur between February 1 and August 15, surveys for nesting bird species other than the California gnatcatcher, including those protected by the Migratory Bird Treaty Act (MBTA), shall be conducted by a qualified biologist following applicable USFWS and/or California Department of Fish & Game (CDFG) guidelines. If no active avian nests are identified within the disturbance limits, then no further mitigation is necessary. However, if active nests for avian species of concern are found within the disturbance limits,	OWD, USFWS	X			Biologist							

Design Feature or Mitigation No.	Design Feature or Mitigation Measure	Person(s) to Verify	Timing of Verification			Responsible Party	Completed		Comments	Resp. Team Member	Spec Section or Dwg No.	Verified in Contract by	Comments
			Pre Const	During Const	Post Const		Initials	Date					
	then species-specific measures prescribed by the MBTA shall be implemented by a qualified biologist. Documentation of the mitigation measures shall be provided to OWD and USFWS within ten (10) days after implementation.												
Mitigation Measure Bio-1B	If the biological surveys identified in performance measure Bio-1A determine the presence of special-status species and/or sensitive or critical habitats on or adjacent to the CIP project site, then the following measures shall be implemented, as applicable: Ten (10) days prior to vegetation clearing, grading and/or construction activities that are scheduled to occur during the raptor nesting season (generally January 15 through July 31), and where suitable trees (such as Eucalyptus spp.) for raptor nesting occur within 500 feet of such activities, pre-construction surveys for raptor nests shall be performed by a qualified biologist. If no occupied raptor nests are identified in suitable trees on or within 500 feet of the construction site, then no further mitigation is necessary. Construction activities within 500 feet of occupied nests shall not be allowed during the raptor breeding season until a qualified biologist determines that the nests are no longer active. Documentation of the raptor surveys and any follow-up monitoring, as necessary, shall be provided to OWD and USFWS within ten (10) days of completing the final survey or monitoring event.	OWD, USFWS, CDFG	X			Biologist							
Performance Measure Bio-1B	If the biological surveys identified in performance measure Bio-1A determine the presence of special-status species and/or sensitive or critical habitats on or adjacent to the CIP project site, then the following measures shall be implemented, as applicable: For CIP projects that would affect non-listed sensitive species and sensitive vegetation communities, the measures listed below shall be implemented prior to vegetation clearing, grading and/or construction activities. In addition, applicable regulatory agency permits and/or authorizations shall be obtained for CIP projects that would affect federal and State-listed species, and the conditions of such permits and/or authorizations shall be implemented prior to vegetation clearing, grading and/or construction	OWD, USFWS, CDFG	X			Biologist							

Design Feature or Mitigation No.	Design Feature or Mitigation Measure	Person(s) to Verify	Timing of Verification			Responsible Party	Completed		Comments	Resp. Team Member	Spec Section or Dwg No.	Verified in Contract by	Comments
			Pre Const	During Const	Post Const		Initials	Date					
	activities.												
Mitigation Measure Bio-1B	Special-status species (and any corresponding USFWS-designated critical habitats), sensitive vegetation communities and MSCP resources shall be avoided through project design or site selection, to the extent practicable.	OWD	X			Engineering Design							
Mitigation Measure Bio-1B	For unavoidable impacts to special-status species (and any corresponding USFWS-designated critical habitats), sensitive vegetation communities and MSCP resources, off-site mitigation shall be provided by one, or a combination of, the following measures, in consultation with the USFWS and CDFG: 1) Debit credits from the San Miguel Habitat Management Area upon approval of the OWD Multiple Species Conservation Program Subarea Plan; 2) Contribute to the preserve system of other agency MSCPs through land acquisition or purchase of mitigation banking credits; and 3) Enhance, restore, create, and preserve in perpetuity off-site habitat areas at locations and mitigation ratios to be approved by the appropriate regulatory agencies and in compliance with the mitigation ratios, guidelines, and standards required by the applicable MSCP subarea plans. Typical mitigation ratios for direct impacts to sensitive vegetation types include 2:1 for coastal sage scrub; 3:1 for maritime succulent scrub; 3:1 for native grassland; 2:1 for oak woodlands; 3:1 for southern interior cypress forest; 3:1 for riparian woodlands/forests; 3:1 for coastal freshwater marsh; 2:1 for riparian scrubs (absent threatened or endangered species); 5:1 for San Diego mesa claypan vernal pools; 3:1 for Gabbroic chaparrals; and 0.5:1 for non-native grassland (absent threatened or endangered species). These ratios will be decreased or increased depending on whether the impacts and mitigation would occur inside or outside an MSCP preserve area. For example, these ratios are typically doubled if impacts occur within previously conserved lands. Plans for habitat enhancement, restoration and creation shall be prepared by persons with expertise in southern California ecosystems and native plant revegetation techniques. Such plans shall include, at a minimum: a) location of the mitigation site(s); b) plant species to be used, container sizes, and seeding rates; c) schematic depicting the mitigation area(s); d)	OWD, USFWS, CDFG	X	X	X	Biologist, Landscape Architect/Restoration Ecologist, Landscape Contractor							

Design Feature or Mitigation No.	Design Feature or Mitigation Measure	Person(s) to Verify	Timing of Verification			Responsible Party	Completed		Comments	Resp. Team Member	Spec Section or Dwg No.	Verified in Contract by	Comments
			Pre Const	During Const	Post Const		Initials	Date					
	planting schedule; e) description of the irrigation methodology; f) measures to control exotic vegetation at the mitigation site(s); g) specific success criteria (e.g., percent cover of native and non-native species, species richness); h) detailed monitoring program; i) contingency measures should the success criteria not be met; and j) identification of the party responsible for meeting the success criteria and preserving the mitigation site(s) in perpetuity (including conservation easements and management funding). In addition, OWD shall negotiate and implement long-term maintenance requirements to ensure the success of the mitigation site(s).												
Mitigation Measure Bio-1B	If federal permits or funding are required for any CIP projects (and listed species) that occur within USFWS-designated critical habitat, then Section 7 Consultations with the USFWS shall be initiated by the appropriate federal permitting agency. Conditions outlined in the Biological Opinion (BO) resulting from the Section 7 Consultations shall be implemented according to the responsible parties and the timing identified in the BO. In the absence of federal permits or funding, a Section 10(a)(1)(B) permit shall be obtained for the above-listed projects.	OWD, USFWS	X			Biologist							
Mitigation Measure Bio-1C	Prior to vegetation clearing, grading, and/or construction activities for CIP projects, a qualified biologist shall attend a pre-construction meeting to inform construction crews of the sensitive species and habitats within and/or adjacent to project sites.	OWD, On-site Construction Supervisor	X			Biologist							
Mitigation Measure Bio-1D	Prior to vegetation clearing, grading, and/or construction activities for CIP projects, a qualified biologist shall oversee installation of appropriate temporary fencing and/or flagging to delineate the limits of construction and the approved construction staging areas for protection of identified sensitive resources outside the approved construction/staging zones. All construction access and circulation shall be limited to designated construction/staging zones. The fencing shall be checked weekly to ensure that fenced construction limits are not exceeded. This fencing shall be removed upon completion of construction activities. Construction staging areas shall be located a minimum of 100 feet from drainages, wetlands and areas supporting sensitive	On-site Construction Supervisor, Biologist	X	X		Construction Contractor							

Design Feature or Mitigation No.	Design Feature or Mitigation Measure	Person(s) to Verify	Timing of Verification			Responsible Party	Completed		Comments	Resp. Team Member	Spec Section or Dwg No.	Verified in Contract by	Comments
			Pre Const	During Const	Post Const		Initials	Date					
	habitats or species. Fueling of equipment shall occur in designated fueling zones within the construction staging areas. All equipment used within the approved construction limits shall be maintained to minimize and control fluid and grease leaks. Provisions to contain and clean up unintentional fuel, oil, fluid and grease leaks/spills shall be in place prior to construction.												
Mitigation Measure Bio-1E	During vegetation clearing, grading, and/or construction for CIP projects, a qualified biologist shall monitor these activities. If sensitive species and/or habitats adjacent to these project sites are inadvertently impacted by these activities, then the biologist shall immediately inform the on-site construction supervisor who shall temporarily halt or redirect work away from the area of impact. OWD shall immediately be notified of the impact and shall consult with the appropriate regulatory agencies to determine the required mitigation, according to Bio-1B(iv)(b) and (c) above. The biologist shall also ensure that all construction night lighting adjacent to sensitive habitat areas is of low illumination, shielded, and directed downwards and away from these areas.	Biologist, On-site Construction Supervisor, OWD, USFWS, CDFG		X		Construction Contractor							
Cultural Resources													
Cul-PDF-1	Approximately six months prior to demolition of any building with potential historical significance, OWD will retain a qualified architectural historian to conduct a historical building assessment. The architectural historian will record, on a California Department of Parks and Recreation (DPR) 523 form, or equivalent documentation, the potential historical resources, if any, that would be affected by this CIP project. The forms will be filed with the South Coastal Information Center (SCIC) to receive Primary numbers and Trinomials. Should the analysis involved in completing the DPR 523 form indicate that a particular structure does not meet the eligibility criteria for listing on the California Register of Historic Places, then no further research and documentation is necessary (a 6-week to 2-month process). If, however, the structure is determined to be a historical resource, then measure Cul-PDF-2 will be implemented. OWD will provide a copy of the historical building assessment and DPR 523 form to the San Diego County Archaeological	OWD	X			Architectural Historian							

Design Feature or Mitigation No.	Design Feature or Mitigation Measure	Person(s) to Verify	Timing of Verification			Responsible Party	Completed		Comments	Resp. Team Member	Spec Section or Dwg No.	Verified in Contract by	Comments
			Pre Const	During Const	Post Const		Initials	Date					
	Society (SDCAS).												

Design Feature or Mitigation No.	Design Feature or Mitigation Measure	Person(s) to Verify	Timing of Verification			Responsible Party	Completed		Comments	Resp. Team Member	Spec Section or Dwg No.	Verified in Contract by	Comments
			Pre Const	During Const	Post Const		Initials	Date					
Cul-PDF-2	For each structure determined to be a historical resource according to measure Cul-PDF-1, the architectural historian will oversee the following documentation and treatment program: · Prior to alteration, remodeling, renovation, relocation, and/or demolition of the historical resource, the architectural historian will document the structure, and associated landscaping and setting, via still and video photography (to be provided on a CD-ROM) and will prepare a written record in accordance with the standards of the Historic American Building Survey (HABS) or Historic American Engineering Record (HAER), including accurate scaled mapping, architectural descriptions, and scaled architectural plans (if available). The record will be accompanied by a report containing site-specific history and appropriate contextual information. This information will be gathered through site-specific and comparative archival research, and oral history collection as appropriate. · For historical resources that will be demolished, additional mitigation beyond HABS/HAER documentation may be necessary. The extent of mitigation will depend upon the importance of the historical resources to be demolished and will be determined in consultation with the State Office of Historic Preservation. Mitigation may include, but not be limited to, the preparation/dissemination of an informational brochure, interpretive displays about the history of the area, and website development and links to other historical buildings. · Within three months after completion of documentation and treatment of the affected historical resources, a copy of the photographic and written record and HABS/HAER report will be submitted to SCIC.	OWD	X	X	X	Architectural Historian							

Design Feature or Mitigation No.	Design Feature or Mitigation Measure	Person(s) to Verify	Timing of Verification			Responsible Party	Completed		Comments	Resp. Team Member	Spec Section or Dwg No.	Verified in Contract by	Comments
			Pre Const	During Const	Post Const		Initials	Date					
Performance Measure Cul-2A	During the design phase for all CIP pipeline projects within the 2013 WWMP, available data shall be reviewed by a qualified archaeologist on the depth of fill below existing roads in which pipelines would be installed. If such review indicates that native soils would not be disturbed by pipeline trenching activities, then cultural resources monitoring will not be required for those CIP projects, and this determination by a qualified archaeologist shall be documented by OWD in accordance with CEQA requirements. OWD will provide a copy of this CEQA documentation to the SDCAS. If it is determined that native soils would be disturbed by pipeline trenching activities, then a cultural resources monitoring program shall be implemented in accordance with measures Cul-2B through Cul-2C.	OWD	X	X		Archaeologist							
Mitigation Measure Cul-2B	Prior to grading for CIP projects, the OWD shall retain a qualified archaeologist to monitor all ground-disturbing activities in coordination with a Native American monitor (as applicable). Prior to beginning any work that requires cultural resources monitoring: · A pre-construction meeting shall be held that includes the archaeologist, on-site construction supervisor and/or grading contractor, and other appropriate personnel to go over the cultural resources monitoring program. · The archaeologist shall (at that meeting or subsequently) submit to the OWD a copy of the site/grading plan that identifies areas to be monitored. · The archaeologist shall coordinate with the on-site construction supervisor and OWD on the construction schedule to identify when and where monitoring is to begin, including the start date for monitoring. · The archaeologist shall be present during grading/excavation and shall document such activity on a standardized form. A record of monitoring activity shall be submitted to OWD each month and at the end of monitoring.	OWD, On-site Construction Supervisor	X	X		Archaeologist, Native American Monitor							
Performance Measure Cul-2C	In the event archaeological resources are discovered during ground-disturbing activities, the on-site construction supervisor shall be notified and shall redirect work away from the location of the discovery	OWD, On-site Construction Supervisor		X		Archaeologist, Native American Monitor							

Design Feature or Mitigation No.	Design Feature or Mitigation Measure	Person(s) to Verify	Timing of Verification			Responsible Party	Completed		Comments	Resp. Team Member	Spec Section or Dwg No.	Verified in Contract by	Comments
			Pre Const	During Const	Post Const		Initials	Date					
	to allow for preliminary evaluation of potentially significant archaeological resources. The OWD shall consult with the archaeologist to consider means of avoiding or reducing ground disturbance within the archaeological site boundaries, including minor modifications of project footprints, placement of protective fill, establishment of a preservation easement, or other means. If development cannot avoid ground disturbance within the archaeological site boundaries, then OWD shall implement the measures listed below. The on-site construction supervisor shall be notified by the archaeologist when the discovered resources have been collected and removed from the site for evaluation, at which time the on-site construction supervisor shall direct work to continue in the location of the discovery. · Prepare a research design and archaeological data recovery plan that will capture those categories of data for which the site is significant, and implement the data recovery plan. The significance of the discovered resources shall be determined in consultation with the Native American representative, as appropriate. · If, in the opinion of the qualified archaeologist and in light of the data available, the significance of the site is such that data recovery cannot capture the values that qualify the site for inclusion in the California Register of Historic Places, then OWD shall reconsider project plans in light of the high value of the resource, and implement more substantial project modifications that would allow the site to be preserved intact, such as redesign, placement of fill, or relocation or abandonment. · Perform appropriate technical analyses, prepare a report and file it with the SCIC, and provide for the permanent curation of recovered resources, as follows: o The archaeologist shall ensure that all significant cultural resources collected are cleaned, catalogued, and analyzed to identify function and chronology as they relate to the history of the area; that faunal material is identified as to species; that specialty studies are completed, as appropriate; and that a letter of acceptance from the curation												

Design Feature or Mitigation No.	Design Feature or Mitigation Measure	Person(s) to Verify	Timing of Verification			Responsible Party	Completed		Comments	Resp. Team Member	Spec Section or Dwg No.	Verified in Contract by	Comments
			Pre Const	During Const	Post Const		Initials	Date					
	o institution has been submitted to OWD. Curation of artifacts shall be completed in consultation with the Native American representative, as applicable.												
Cul-SCP-1	The OWD will implement the provisions of California Health and Safety Code Section 7050.5 and Public Resources Code Section 5097.98 which establish procedures to be followed if Native American or other skeletal remains are discovered during construction of a project, including the treatment of remains prior to, during, and after evaluation, and reburial procedures.	OWD, On-site Construction Supervisor		X		Archaeologist, Native American Monitor							
Energy													
Ene-PDF-1	CIP projects featuring electric pumps and motors would use high efficiency pumps and motors.	OWD	X			Engineering Design							
Ene-PDF-2	All outdoor (security) lighting installed at any above-ground CIP facilities (i.e. pump stations, treatment plant structures) under the 2013 WWMP will use energy-efficient light emitting diodes, with motion sensor lighting controls to limit usage. Lighting adjacent to native vegetation communities will be of low illuminations, shielded, and directed downwards and away from these areas to avoid potential impacts to nocturnal wildlife from increased predation that would occur from “spill-over” of nighttime light levels into the adjacent habitats.	On-site Construction Supervisor		X		Construction Contractor							
Ene-PDF-3	OWD would conduct annual pump efficiency tests at each CIP project featuring a pump and correct any decreases in efficiency through the repair or replacement of appropriate pump components.	OWD			X	OWD Maintenance Personnel							
Ene-PDF-4	OWD would employ soft starts and stops to all CIP project pumps and motors to reduce total electricity consumption during operation of pumps and motors.	OWD	X			Engineering Design							
Geology and Soils													
Geo-PDF-1	At the time of CIP project design, the OWD will implement the relevant requirements of the 2006 Uniform Building Code (UBC) and 2007 California Building Code (CBC), as updated or amended, and California Division of Mines & Geology (CDMG) Special Publications 117.	OWD	X			Engineering Design							
Geo-SCP-1	Prior to construction of CIP projects, areas of liquefaction and/or landslides will be identified as part of site-specific geotechnical investigations. The	OWD	X			Geologist							

Design Feature or Mitigation No.	Design Feature or Mitigation Measure	Person(s) to Verify	Timing of Verification			Responsible Party	Completed		Comments	Resp. Team Member	Spec Section or Dwg No.	Verified in Contract by	Comments
			Pre Const	During Const	Post Const		Initials	Date					
	investigations will specifically address foundation and slope stability in liquefiable and landslide areas proposed for construction.												
Geo-SCP-1	Recommendations made in conjunction with the geotechnical investigations will be implemented during construction, including but not limited to the following actions: · Over-excavate unsuitable materials and replace them with engineered fill. · For thinner deposits, remove loose, unconsolidated soils and replace with properly compacted fill soils, or apply other design stabilization features (i.e., excavation of overburden). · For thicker deposits, implement applicable techniques such as dynamic compaction (i.e., dropping heavy weights on the land surface), vibro-compaction (i.e., inserting a vibratory device into the liquefiable sand), vibro-replacement (i.e., replacing sand by drilling and then vibro-compacting backfill in the bore hole), or compaction piles (i.e., driving piles and densifying surrounding soil). · Lower the groundwater table to below the level of liquefiable soils. · Perform in-situ densification of soils or other alterations to the ground characteristics. · For landslides, implement applicable techniques such as stabilization (i.e., construction of buttress fills, retaining walls, or other structural support to remediate the potential for instability of cut slopes composed of landslide debris); remedial grading and removal of landslide debris (e.g., over-excavation and recompaction); or avoidance (e.g., structural setbacks).	On-site Construction Supervisor		X		Grading Contractor							
Geo-SCP-2	Prior to construction of CIP projects, areas of severely erodable soils will be identified as part of site-specific geotechnical investigations. The investigations will specifically address foundation and slope stability in erodable soils proposed for construction.	OWD	X			Geologist							
Geo-SCP-2	Recommendations made in conjunction with the geotechnical investigations will be implemented during construction, including but not limited to the following	On-site Construction Supervisor		X		Grading, Construction, Landscape Contractors							

Design Feature or Mitigation No.	Design Feature or Mitigation Measure	Person(s) to Verify	Timing of Verification			Responsible Party	Completed		Comments	Resp. Team Member	Spec Section or Dwg No.	Verified in Contract by	Comments
			Pre Const	During Const	Post Const		Initials	Date					
	actions: · Minimize disturbance to existing vegetation and slopes. · Construct drainage control devices (e.g., storm drains, brow ditches, subdrains, etc.) to direct surface water runoff away from slopes and other graded areas. · Provide temporary hydroseeding of cleared vegetation and graded slopes as soon as possible following grading activities for areas that will remain in disturbed condition (but will not be subject to further construction activities) for a period greater than two weeks during the construction phase.												
Geo-SCP-3	The construction bid documents for each CIP project will include either a 90 percent Erosion Control Plan (for projects that would result in less than one acre of land disturbance) or a 90 percent Storm Water Pollution Prevention Plan (SWPPP) (for projects that would result in one acre or greater of land disturbance). The Erosion Control Plan will comply with the storm water regulations or ordinances of the local agency jurisdiction within which the CIP project occurs, while the SWPPP will comply with the NPDES General Construction Permit. These plans will be based on site-specific hydraulic and hydrologic characteristics, and identify a range of BMPs to reduce impacts related to storm water runoff, including sedimentation BMPs to control soil erosion. The construction contractor will identify the specific storm water BMPs to be implemented during the construction phase of a given CIP project, and will prepare and implement the final Erosion Control Plan or SWPPP for that project. Typical BMPs to be implemented as part of the Erosion Control Plan or SWPPP may include, but may not be limited to, the actions listed below. For protection of finished graded areas and manufactured slopes, the construction contractor will implement the OWD Standard Specifications for Slope Protection and Erosion Control (Section 02202).	On-site Construction Supervisor	X	X		Construction Contractor							
Geo-SCP-3	Implement a “weather triggered” action plan during the rainy season involving installation of enhanced erosion and sediment control measures prior to	On-site Construction Supervisor		X		Construction Contractor							

Design Feature or Mitigation No.	Design Feature or Mitigation Measure	Person(s) to Verify	Timing of Verification			Responsible Party	Completed		Comments	Resp. Team Member	Spec Section or Dwg No.	Verified in Contract by	Comments
			Pre Const	During Const	Post Const		Initials	Date					
	predicted storm events (i.e., 40 percent or greater chance of rain).												
Geo-SCP-3	Use erosion control/stabilizing measures in cleared areas and on graded slopes of 3:1 (horizontal to vertical) gradient or steeper, such as geotextiles, mats, fiber rolls, soil binders, or temporary hydroseeding.	On-site Construction Supervisor		X		Construction Contractor							
Geo-SCP-3	Use sediment controls to protect the site perimeter and prevent off-site sediment transport, such as filtration devices (e.g., temporary inlet filters), silt fences, fiber rolls, gravel bags, temporary sediment basins, check dams, street sweeping, energy dissipaters, stabilized construction access points (e.g., temporary gravel or pavement) and sediment stockpiles (e.g., silt fences and tarps), and properly fitted covers for sediment transport vehicles.	On-site Construction Supervisor		X		Construction Contractor							
Geo-SCP-3	Divert runoff from uphill areas around disturbed areas of the construction site.	On-site Construction Supervisor		X		Construction Contractor							
Geo-SCP-3	Protect storm drain inlets on-site or downstream of the construction site to eliminate entry of sediment.	On-site Construction Supervisor		X		Construction Contractor							
Geo-SCP-3	Store BMP materials in on-site areas to provide “standby” capacity adequate to provide complete protection of exposed areas and prevent off-site sediment transport.	On-site Construction Supervisor		X		Construction Contractor							
Geo-SCP-3	Train personnel responsible for BMP installation and maintenance.	On-site Construction Supervisor		X		Construction Contractor							
Geo-SCP-3	Implement solid waste management efforts such as proper containment and disposal of construction debris.	On-site Construction Supervisor		X		Construction Contractor							
Geo-SCP-3	Install permanent landscaping (or native vegetation in areas adjacent to natural habitats) and irrigation as soon as feasible after final grading or construction.	On-site Construction Supervisor			X	Landscape Contractor/Restoration Ecologist							
Geo-SCP-3	Implement appropriate monitoring and maintenance efforts (e.g., prior to and after storm events) to ensure proper BMP function and efficiency.	On-site Construction Supervisor		X		Construction Contractor							
Geo-SCP-3	Implement sampling/analysis, monitoring/reporting and post-construction management programs per NPDES requirements.	On-site Construction Supervisor		X		Construction Contractor							

Design Feature or Mitigation No.	Design Feature or Mitigation Measure	Person(s) to Verify	Timing of Verification			Responsible Party	Completed		Comments	Resp. Team Member	Spec Section or Dwg No.	Verified in Contract by	Comments
			Pre Const	During Const	Post Const		Initials	Date					
Geo-SCP-3	Implement additional BMPs as necessary (and as required by appropriate regulatory agencies) to ensure adequate erosion and sediment control.	On-site Construction Supervisor		X		Construction Contractor							
Geo-SCP-4	Prior to construction of CIP projects, areas of geologic/soil instability will be identified as part of site-specific geotechnical investigations. The investigations will specifically address foundation and slope stability within unstable geologic units/soils proposed for construction.	OWD	X			Geologist							
Geo-SCP-4	Recommendations made in conjunction with the geotechnical investigations will be implemented during construction, including but not limited to the following actions: · Perform site-specific settlement analyses in areas deemed appropriate by the geotechnical engineer and evaluate the potential for groundwater-related subsidence. · Over-excavate unsuitable materials and replace them with engineered fill. · To minimize or avoid lateral spreading of on-site soils, remove compressible soils and replace them with properly compacted fill, perform compaction grouting or deep dynamic compaction, or use stiffened conventional foundation systems. · To minimize or avoid differential compression or settlement of on-site soils, manage oversized material (i.e., rocks greater than 12 inches) via off-site disposal, placement in non-structural fill, or crushing or pre-blasting to generate material less than 12 inches. Oversized material greater than 4 feet will not be used in fills, and will not be placed within 10 feet of finished grade, within 10 feet of manufactured slope faces (measured horizontally from the slope face), or within 3 feet of the deepest pipeline or other utilities. · To minimize or avoid shrinking/swelling of on-site expansive soils, over-excavate for deeper fills (at least five feet below finished grade). · Locate foundations and larger pipelines outside of cut/fill transition zones and landscaped irrigation zones.	On-site Construction Supervisor		X		Construction Contractor							
Performance	During the design phase for all CIP pipeline projects	OWD, On-site		X		Contractor							

Design Feature or Mitigation No.	Design Feature or Mitigation Measure	Person(s) to Verify	Timing of Verification			Responsible Party	Completed		Comments	Resp. Team Member	Spec Section or Dwg No.	Verified in Contract by	Comments
			Pre Const	During Const	Post Const		Initials	Date					
Measure Geo-5A	within the 2013 WWMP, available data shall be reviewed on the depth of fill below existing roads in which pipelines would be installed. If such review indicates that native soils would not be disturbed by pipeline trenching activities, then paleontological monitoring will not be required for those CIP projects, and this determination shall be documented by OWD in accordance with CEQA requirements. If it is determined that native soils would be disturbed by pipeline trenching activities, then a paleontological monitoring program shall be implemented in accordance with measures Geo-5B through Geo-5D.	Construction Supervisor											
Mitigation Measure Geo-5B	Prior to grading for CIP projects, the OWD shall retain a qualified paleontologist to monitor all ground-disturbing activities. A record of monitoring activity shall be submitted to OWD each month and at the end of monitoring.	OWD	X			Paleontologist							
Mitigation Measure Geo-5C	In the event fossils are discovered during ground-disturbing activities, the on-site construction supervisor shall be notified and shall redirect work away from the location of the discovery, so that the fossils can be removed by the paleontologist for significance evaluations. The on-site construction supervisor shall be notified by the paleontologist when the fossils have been removed, at which time the on-site construction supervisor shall direct work to continue in the location of the fossil discovery.	On-site Construction Supervisor		X		Paleontologist							
Mitigation Measure Geo-5D	For fossils removed from the construction site in accordance with measure Geo-5C that are determined to be significant, the following measures shall be implemented: · The paleontologist shall ensure that all significant fossils collected are cleaned, identified, catalogued, and permanently curated with an appropriate institution with a research interest in the materials; · The paleontologist shall ensure that specialty studies are completed, as appropriate, for any significant fossil collected; and · The paleontologist shall ensure that curation of fossils are completed in consultation with OWD. A letter of acceptance from the curation institution shall be submitted to OWD.	OWD			X	Paleontologist							

Design Feature or Mitigation No.	Design Feature or Mitigation Measure	Person(s) to Verify	Timing of Verification			Responsible Party	Completed		Comments	Resp. Team Member	Spec Section or Dwg No.	Verified in Contract by	Comments
			Pre Const	During Const	Post Const		Initials	Date					
Water Resources													
Hyd-SCP-1	In accordance with the Water Agencies' Standards (WAS), the construction contractor is required to implement a Safety Plan at each CIP construction site that would involve the transport, storage, use, and disposal of hazardous materials. Such plans will also specify storm water BMPs, to be consistent with those identified in Geo-SCP-3, to minimize downstream water quality degradation from runoff pollution associated with CIP construction activities.	OWD, On-site Construction Supervisor		X		Construction Contractor							
Hyd-PDF-1	For each CIP facility that would involve the transport, storage, use, and disposal of hazardous materials during project operation, OWD will implement a site-specific Hazardous Materials Business Plan (HMBP), including BMPs to prevent downstream water quality degradation from runoff pollution associated with CIP post-construction operations. In addition, OWD is required to obtain a permit from the County of San Diego Department of Environmental Health (DEH) allowing for the use of specified hazardous substances during the CIP post-construction operation of these sites. Typical BMPs to be implemented as part of the HMBP may include, but are not limited to, the actions listed below.	OWD, On-site Construction Supervisor, County DEH		X	X	Construction Contractor, OWD Maintenance Personnel (long-term operations)							
Hyd-PDF-1	Minor chemical spills will be contained by absorbent, using trained employees in proper protective equipment, and waste will be placed in a properly labeled container for disposal.	OWD, On-site Construction Supervisor, County DEH		X	X	Construction Contractor, OWD Maintenance Personnel (long-term operations)							
Hyd-PDF-1	For major chemical spills, employees will notify the local fire department. Prior to arrival by emergency responders, trained employees using proper protective equipment will attempt to contain the spill using absorbent, physical barriers, or other methods as specified in the HMBP, and prevent it from entering the storm drain and from discharging off-site as runoff.	OWD, On-site Construction Supervisor, County DEH, Local Fire Department		X	X	Construction Contractor, OWD Maintenance Personnel (long-term operations)							
Hyd-PDF-2	At the time of CIP project design, OWD will implement the relevant requirements of the 2006 UBC and 2007 CBC for all above-ground CIP projects (reservoirs, pump stations, and facilities for groundwater production wells), including the design of appropriately sized drainage facilities, where necessary, to capture runoff from each project site to reduce the risk of	OWD	X			Engineering Design							

Design Feature or Mitigation No.	Design Feature or Mitigation Measure	Person(s) to Verify	Timing of Verification			Responsible Party	Completed		Comments	Resp. Team Member	Spec Section or Dwg No.	Verified in Contract by	Comments
			Pre Const	During Const	Post Const		Initials	Date					
	flooding.												
Landform Alteration and Visual Aesthetics													
Aes-PDF-1	In accordance with WAS and standard operating procedures, the following design, landscaping and irrigation measures will be implemented for CIP projects: Treatment Plant buildings and pump station buildings will use appropriate building materials and color palettes that visually blend the structures in with their surroundings (natural and urban).	OWD	X			Engineering Design							
Aes-PDF-1	Treatment plant buildings, and pump station buildings will use low-reflective paint and glass.	OWD	X			Engineering Design							
Aes-PDF-1	For portions of pipeline projects installed in naturally vegetated areas, the disturbance footprints for the pipeline corridor and associated staging areas will be hydroseeded, following backfilling and recontouring, using a non-irrigated native plant mix consistent with original site conditions and surrounding vegetation.	On-site Construction Supervisor			X	Landscape Contractor							
Aes-PDF-1	For pump stations and treatment plant structures in naturally vegetated settings, any disturbed unpaved areas following construction will be revegetated (hydroseeding and/or plantings) using native plant materials consistent with original site conditions and surrounding vegetation. A temporary irrigation system will be installed and maintained by OWD, or watering trucks will be used at a frequency to be determined by OWD to maintain successful plant growth. Temporary irrigation will be discontinued upon OWD's determination that the landscaping has permanently established, without the need for supplemental watering.	On-site Construction Supervisor			X	Landscape Contractor							
Aes-PDF-1	For CIP projects in urban settings, any disturbed unpaved areas following construction will be landscaped using plant materials consistent with original site conditions and/or surrounding ornamental vegetation. A permanent irrigation system will be installed and maintained by OWD.	On-site Construction Supervisor			X	Landscape Contractor							
Land Use and Planning													
LU-PDF-1	The design of CIP projects located within and adjacent to the "100% Preserve" areas under the County of San Diego MSCP (refer to Figure 4.2-1 of	On-site Construction Supervisor			X	Landscape Contractor							

Design Feature or Mitigation No.	Design Feature or Mitigation Measure	Person(s) to Verify	Timing of Verification			Responsible Party	Completed		Comments	Resp. Team Member	Spec Section or Dwg No.	Verified in Contract by	Comments
			Pre Const	During Const	Post Const		Initials	Date					
	the Final PEIR) will incorporate the following guidelines: Plant materials used for landscaping will consist of native species similar to/compatible with the adjacent habitat, and those species should be based on plants with genetic materials of the area.												
LU-PDF-1	Fencing will be installed along the MSCP reserve boundary to prevent uncontrolled human access.	On-site Construction Supervisor	X			Grading/Construction Contractor							
LU-PDF-2	The design of CIP projects located within and adjacent to the “Hardline Preserve” and “Pre-Approved Mitigation” areas under the City of San Diego MSCP will incorporate the following guidelines: Drainage will be directed away from the reserves so as to avoid the release of toxins, chemicals, and petroleum products in storm water runoff that might degrade or harm the natural environment or ecosystem processes.	OWD, On-site Construction Supervisor	X	X		Engineering Design, Construction Contractor							
LU-PDF-2	Barriers (e.g., non-invasive vegetation, rocks/boulders, fences, walls, and/or signage) will be installed along the MSCP reserve boundary to prevent uncontrolled human access.	On-site Construction Supervisor	X			Grading/Construction Contractor							
LU-PDF-2	Plant materials used for landscaping will consist of native species similar to/compatible with the adjacent habitat, and those species should be based on plants with genetic materials of the area.	On-site Construction Supervisor			X	Landscape Contractor							
LU-PDF-3	The design of CIP projects located within and adjacent to the “100% Preserve” areas under the City of Chula Vista MSCP (refer to Figure 4.2-1 of the Final PEIR) will incorporate the following guidelines: Through the use of detention basins, drainage will not be discharged directly into the reserves so as to avoid the release of toxins, chemicals, and petroleum products in storm water runoff that might degrade or harm the natural environment or ecosystem processes.	OWD, On-site Construction Supervisor	X	X		Engineering Design, Construction Contractor							
LU-PDF-3	Plant materials used for landscaping will consist of native species that reflect the adjacent native habitat, and non-native plant species will not be introduced into landscaped areas adjacent to the reserves.	On-site Construction Supervisor			X	Landscape Contractor							

Design Feature or Mitigation No.	Design Feature or Mitigation Measure	Person(s) to Verify	Timing of Verification			Responsible Party	Completed		Comments	Resp. Team Member	Spec Section or Dwg No.	Verified in Contract by	Comments
			Pre Const	During Const	Post Const		Initials	Date					
Noise													
Noi-PDF-1	CIP projects located adjacent to residential land uses will place pumps, emergency generators, and any other motorized equipment within a masonry enclosure that minimizes interior noise. For any vents included in the enclosure, the construction contractor will use materials specified within the OWD Standard Specifications for Louvers and Vents (Section 10200). Prior to operation, the noise levels from stationary motorized equipment (including emergency generators) will be measured to ensure that the following standards are not exceeded: · CIP Projects located within the County of San Diego will not exceed a one-hour exterior noise limit of 50 dBA at the property line during daytime hours (7:00 a.m. to 10:00 p.m.) and 45 dBA during nighttime hours (10:00 p.m. to 7:00 a.m.).	OWD, On-site Construction Supervisor	X	X		Engineering Design, Construction Contractor, Noise Monitor							
Noi-SCP-1	Construction activities will comply with applicable local noise ordinances and regulations specifying sound control, including the County of San Diego. Measures to reduce construction/ demolition noise to the maximum extent feasible will be included in contractor specifications and will include, but not be limited to, the following: · Construction activity will be restricted to the hours specified within each respective Municipal Code, depending on the location of the specific CIP project, as follows: o Construction activity for CIP projects located within San Diego County will occur between hours of 7:00 a.m. to 7:00 p.m., Monday through Saturday; construction shall be prohibited on Sundays and holidays. o and Sunday. · Construction noise for projects located within San Diego County will not exceed an average sound level of 75 dBA for an eight-hour period at the project's property boundary. · All construction equipment will be properly outfitted and maintained with manufacturer-recommended noise-reduction devices.	On-site Construction Supervisor		X		Construction Contractor							
Noi-SCP-2	For any construction activities which include blasting, the construction contractor will implement the OWD	OWD, On-site Construction	X	X		Construction Contractor,							

Design Feature or Mitigation No.	Design Feature or Mitigation Measure	Person(s) to Verify	Timing of Verification			Responsible Party	Completed		Comments	Resp. Team Member	Spec Section or Dwg No.	Verified in Contract by	Comments
			Pre Const	During Const	Post Const		Initials	Date					
	Standard Specifications for Explosives and Blasting (Section 02200). Subject to these standard specifications, a qualified blasting consultant and geotechnical consultant will prepare all required blasting plans and monitor all blasting activities. Prior to blasting, the contractor will secure all permits required by law for blasting operations and provide notification at least five working days in advance of blasting activities within 300 feet of a residence or commercial building. Monitoring of all blasting activities will be in conformance with the CDMG standards and in no case will blasting intensities exceed the safety standards established by the U.S. Department of Mines.	Supervisor				Blasting/Geotechnical Consultants/Monitors							
Public Safety													
Haz-SCP-1	Prior to construction of CIP projects, the construction contractor will prepare and submit a HMBP to OWD. The procedures in the HMBP will comply with U.S. Department of Transportation (USDOT, Office of Hazardous Materials Safety) as it pertains to the transportation, storage, use, and disposal of hazardous materials and California Highway Patrol (CHP) regulations for the transportation of hazardous materials along state highways.	OWD, On-site Construction Supervisor	X	X		Construction Contractor							
Haz-PDF-1	OWD will continue to prepare and implement a post-construction HMBP for long-term operations at CIP projects involving the transportation, storage, use, and disposal of hazardous materials. The procedures in the HMBP will comply with USDOT (Office of Hazardous Materials Safety) and CHP regulations for the transportation of hazardous materials along State highways.	OWD			X	OWD Maintenance Personnel							
Mitigation Measure Haz-2A	As part of geotechnical investigations conducted prior to ground-disturbing activities for CIP projects, a database search of hazardous materials sites shall be performed within a one-mile radius surrounding the CIP site pursuant to Government Code Section 65962.5. In the event such sites are identified within the search parameters, OWD shall retain a registered environmental assessor to prepare a Remediation Plan for any contaminated soils or groundwater encountered within the construction area. The Remediation Plan shall be incorporated into the construction documents. If contamination is	OWD, On-site Construction Supervisor, County DEH, RWQCB	X	X		Construction Contractor, Registered Environmental Assessor							

Design Feature or Mitigation No.	Design Feature or Mitigation Measure	Person(s) to Verify	Timing of Verification			Responsible Party	Completed		Comments	Resp. Team Member	Spec Section or Dwg No.	Verified in Contract by	Comments
			Pre Const	During Const	Post Const		Initials	Date					
	encountered during ground-disturbing activities, the on-site construction supervisor shall redirect work away from the location of the contamination and shall notify OWD, County DEH and Regional Water Quality Control Board (RWQCB). The contamination remediation and removal activities shall be conducted in accordance with the Remediation Plan and pertinent regulatory guidelines, under the oversight of the appropriate regulatory agency.												
Haz-SCP-2	In the event that CIP construction activities would require a lane or roadway closure, or could otherwise substantially interfere with traffic circulation, the contractor will obtain a Traffic Control Permit from the local land use agency and/or state agencies such as the California Department of Transportation (Caltrans), prior to construction as necessary, and implement a traffic control plan to ensure that adequate emergency access and egress is maintained and that traffic will move efficiently and safely in and around the construction site. The traffic control plan may include, but not be limited to, the following measures: · Install traffic control signs, cones, flags, flares, lights, and temporary traffic signals in compliance with the requirements of local jurisdictions, and relocate them as the work progresses to maintain effective traffic control. · Provide trained and equipped flag persons to regulate traffic flow when construction activities encroach onto traffic lanes. · Control parking for construction equipment and worker vehicles to prevent interference with public and private parking spaces, access by emergency vehicles, and owner's operations. · Traffic control equipment, devices, and post settings will be removed when no longer required. Any damage caused by equipment installation will be repaired.	OWD, On-site Construction Supervisor, Local Agency, Caltrans	X	X		Construction Contractor							
Haz-SCP-2	For CIP construction activities near schools, the contractor will coordinate with schools prior to commencement of construction activity to minimize potential disruption of traffic flows during school day peak traffic periods.	OWD, On-site Construction Supervisor, Local School District	X	X		Construction Contractor							

This page intentionally left blank.

ATTACHMENT G

FINAL REPORT

Wastewater Management Plan

REGISTERED PROFESSIONAL ENGINEER
TIMOTHY FRANCIS
No. C 043937
Exp. 6/30/13
CIVIL
STATE OF CALIFORNIA

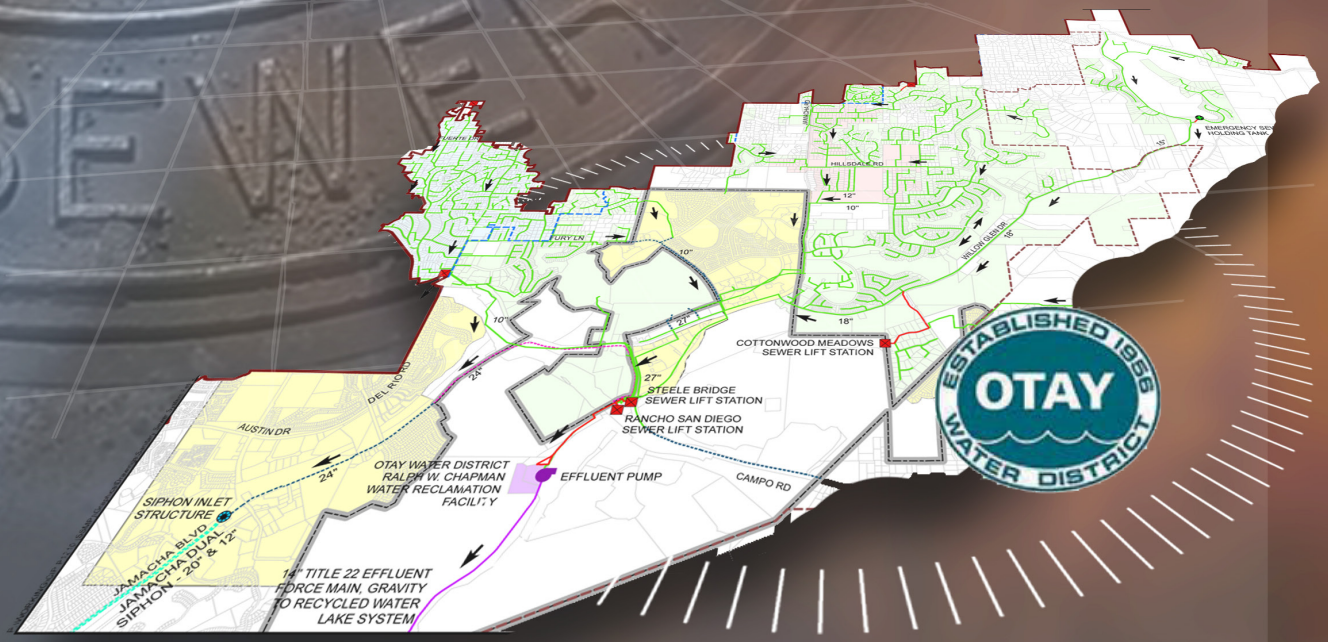

MAY 2013
04094007.0000

MALCOLM PIRNIE | ARCADIS
The Water Division of ARCADIS

MALCOLM PIRNIE | ARCADIS

The Water Division of ARCADIS

Imagine the result

Wastewater Management Plan

May, 2013

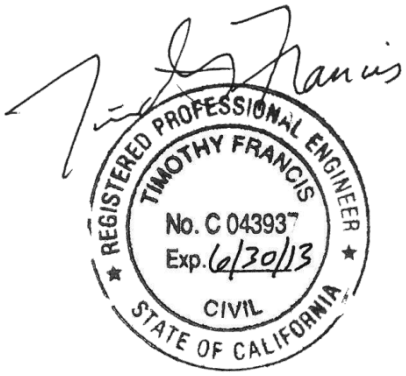

EXECUTIVE SUMMARY **1**

Background and Purpose 1

Summary of Conclusions 2

Wastewater Flow Projections 2

Wastewater Collection System 2

Recycled Water Supply and Demand 3

Future Wastewater and Recycled Water Management Options 4

Wastewater Collection System Recommendations 5

Hydraulic Model 5

Recommended Wastewater System Improvements 5

Recommended Wastewater Management and Recycled Water Strategies 8

1.0 INTRODUCTION **9**

1.1 Background 9

1.2 Project Purpose and Scope 10

2.0 WASTEWATER FLOW PROJECTIONS **11**

2.1 Study Area 11

2.2 Previous Wastewater Flow Projections 13

2.3 Population Projections 13

2.4 Calibration of Unit Wastewater Flow Factors 14

2.5 Wastewater Flow Projections 16

3.0 WASTEWATER COLLECTION SYSTEM ANALYSIS **18**

3.1 Existing Wastewater Collection System 18

3.1.1 Ralph W. Chapman Water Reclamation Facility 18

3.1.2 Pump Stations 20

3.1.3 Collection System Pipes 21

3.2 Wastewater System Hydraulic Model 22

3.2.1 Model Software and Modeled System 22

3.2.2 Model Calibration 23

3.2.3 Assessment of Existing Hydraulic Model 25

3.2.4 Model Use in the Wastewater Management Plan 26

3.2.5 Hydraulic Model Updates 26

3.3 Analysis of Existing System 27

3.3.1 Evaluation Criteria 28

3.3.2 Existing System Assessment 29

3.3.3 Existing System Improvements 31

3.4 Analysis of Future Conditions 31

3.4.1 Future System Assessment 33

3.4.2 Future System Improvements 33

3.5 Summary of Recommended System Improvements & Conceptual Cost Opinions 36

4.0 RECYCLED WATER SUPPLY ANALYSIS 38

4.1 Recycled Water Distribution Facilities 38

4.2 Existing Recycled Water Supplies 38

4.2.1 Recycled Water from the RWCWRF 39

4.2.2 Recycled Water from the SBWRP 39

4.3 Existing and Projected Recycled Water Usage 40

4.4 Comparison of Recycled Water Demands and Existing Supplies 41

4.5 Potential Additional Recycled Water Supply Options 43

4.5.1 Expansion of the RWCWRF 44

4.5.2 Additional Purchases from the SBWRP 45

4.5.3 Partnership with City Of Chula Vista 45

4.5.4 Joint WRF with San Diego County 47

5.0 ANALYSIS OF WASTEWATER MANAGEMENT OPTIONS 48

5.1 Identification of Wastewater Management Options 48

5.1.1 Option A: Maintain RWCWRF at 1.3 MGD 49

5.1.2 Option B: Expand RWCWRF to 2.6 MGD 50

5.1.3 Option C: Expand RWCWRF to 3.9 MGD 51

5.1.4 Option D: Abandon RWCWRF and Utilize Metro 53

5.1.5 Option E: Abandon RWCWRF and Utilize New Joint District/County WRF 53

5.2 Summary of Cost Components for Wastewater Management Options 55

5.3 Cost Estimates for Expansion and Demolition of the RWCWRF 57

5.3.1 Estimated Construction Costs for RWCWRF Options 57

5.3.2 Estimated Additional O&M Costs for RWCWRF Options 57

5.3.3 Estimated Decommissioning Costs for RWCWRF Options 59

5.4 Summary of Wastewater Management Options Cost Evaluations 59

5.4.1 Common Economic Cost Assumptions 59

5.4.2 Summary of Cost Comparisons for Wastewater Management Options 60

6.0 CONCLUSIONS AND RECOMMENDATIONS 62

6.1 Summary of Conclusions 62

6.2 Wastewater Collection System Recommendations 65

6.2.1 Hydraulic Model 65

6.2.2 Recommended Wastewater System Improvements 65

6.3 Recommended Wastewater Management and Recycled Water Strategies 68

6.4 Potential Funding Sources for Wastewater Capital Improvements 69

6.4.1 Internal Funding Options 69

6.4.2 External Funding Options 69

7.0 LIST OF REFERENCES 72

Tables

Table ES-1. Recommended Wastewater Collection System Improvements 5

Table 2-1. Existing and Projected Populations within the Jamacha Basin[1] 14

Table 2-2. Calibration Summary of Unit Wastewater Generation Factors 16

Table 2-3. Updated Wastewater Flow Projections for the Jamacha Basin 17

Table 2-4. Updated Wastewater Flow Projections for District Service Area 17

Table 3-1. Summary of Wastewater Pump Stations 20

Table 3-2. Summary of Collection System Pipes 22

Table 3-3: Peaking Factors 23

Table 3-4. Hydraulic Model Invert Elevation Updates 26

Table 3-5. Hydraulic Model Pipe Size Updates 27

Table 3-6. CIP Projects Added to the Hydraulic Model 27

Table 3-7. Wastewater System Performance Criteria 28

Table 3-8. Existing System Deficiencies 29

Table 3-9. Recommended Existing System Improvements 31

Table 3-10. Future System Deficiencies 33

Table 3-11. Recommended System Improvements for 2030 Flow Conditions 36

Table 3-12. Summary of Recommended System Improvements 37

Table 4-1. Projected Recycled Water Demands[1] 41

Table 4-2. Projected Monthly Recycled Water Demands 42

Table 4-3. Projected Peak Day Recycled Water Demands vs. Existing Supply 43

Table 5-1. Wastewater Treatment Cost Components 55

Table 5-2. Recycled Water Sources for Wastewater Management Options 56

Table 5-4. Opinions of Construction Costs for RWCWRF Options 58

Table 5-5. Opinions of Additional O&M Costs for RWCWRF Options 58

Table 5-6. Common Economic Cost Assumptions 60

Table 5-7. Present Worth Cost Summary for Wastewater Management Options 61

Table 6-1. Recommended Wastewater Collection System Improvements 65

Figures

Figure ES-2 Future System Improvements 7

Figure 2-1 Study Area 12

Figure 2-2 Wastewater Generation Parcels 15

Figure 3-1 Existing Collection System 19

Figure 3-2 Flow Meter Basins 24

Figure 3-3 Existing System Assessment 30

Figure 3-4 Existing System Improvements 32

Figure 3-5 Future System Assessment 34

Figure 3-6 Future System Improvements 35

Figure 5.1 Option A: Maintain RWCWRF at 1.3 MGD 50

Figure 5.2 Option B: Expand RWCWRF to 2.6 MGD 51

Figure 5.3 Option C: Expand RWCWRF to 3.9 MGD 52

Figure 5.4 Option D: Abandon RWCWRF and Utilize Metro 53

Figure 5.5 Option E: Abandon RWCWRF and Utilize New Joint District/County WRF55

Figure 6-1 Alignment for CIP #3 67

Figure 6-1. Alignment for CIP #3 67

Appendices

Appendix A - Technical Memorandum: Recycled Water Supply Augmentation Planning Level Study

Appendix B - RWCWRF Expansion Options Site Layout

Appendix C - Technical Memorandum: Summary of Costs Associated with Upgrade, Expansion and Decommissioning of the Ralph W. Chapman Water Reclamation Facility

Appendix D - Analysis of Wastewater Management Options

Appendix E - Cost Evaluations Excel Workbook

Abbreviations and Acronyms

AACE	Association for the of Advancement of Cost Engineering International
AF	acre-foot
AFY	acre-foot per year
Bureau	U.S. Bureau of Reclamation
CIP	Capital improvement program
County	County of San Diego
District	Otay Water District
ENR CCI	Engineering News Record Construction Cost Index
EPA	Environmental Protection Agency
FY	Fiscal Year
gpcd	gallons per capita per day
gpm	gallons per minute
IBWC	International Boundary and Water Commission
IPR	Indirect potable reuse
KWH	Kilowatt-hour
MBR	Membrane bioreactor
Metro System	City of San Diego Metropolitan Wastewater System
MGD	million gallons per day
MGRA	Master geographic reference area
MWD	Metropolitan Water District of Southern California
NPDES	National Pollution Discharge Elimination System
O&M	operations and maintenance
PEIR	Program Environmental Impact Report
PLWWTP	Point Loma Wastewater Treatment Plant
PVC	Polyvinyl chloride
RCW	Recycled water
RDII	Rainfall derived infiltration and inflow
RSDPS	Rancho San Diego Pump Station
RSDOF	Rancho San Diego Outfall Facilities
RWCWRF	Ralph W. Chapman Water Recycling Facility
SANDAG	San Diego Association of Governments
SBPS	Steel Bridge Pump Station
SBWRP	City of San Diego South Bay Water Reclamation Plant
SDCWA	San Diego County Water Authority
SPEIR	Supplemental Program Environmental Impact Report
SSMP	Sewer System Management Plan
SVO	Spring Valley Outfall

Title 22	Title 22, Division 4, Chapter 3 of the *California Code of Regulations*
USBR	United States Bureau of Reclamation
WAS	Water Agencies' Standards
WRF	Water Reclamation Facility
WWTP	Wastewater Treatment Plant

EXECUTIVE SUMMARY

Background and Purpose

The Otay Water District (District), located in the southern portion of San Diego County, provides wastewater service to a portion of the land area within the Jamacha Basin, which is located within its North District. The County of San Diego also provides wastewater service in a portion of the Jamacha Basin. Wastewater flows from each agency's customers are conveyed in joint collection and pumping systems.

Wastewater generated in the Jamacha Basin can be discharged into the City of San Diego Metropolitan Wastewater System (Metro System). The District owns and operates the Ralph W. Chapman Water Reclamation Facility (RWCWRF) within the Jamacha Basin, which is operated as a skimming facility. Wastewater flows generated within the Jamacha Basin are pumped to the RWCWRF and treated to produce recycled water, which is used to meet a portion of the District's existing recycled water demand. All remaining wastewater flows are discharged into the Metro System via the County's Rancho San Diego Outfall Facilities (RSDOF) and the downstream Spring Valley Outfall (SVO). The 2010 wastewater collection rates within the Jamacha Basin for connected sewer customers only were about 1.3 MGD for the District and about 0.65 MGD for the County. Wastewater collection, pumping, and treatment costs are shared between the District and the County as provided in the 1998 agreement between the Spring Valley Sanitation District (now San Diego County) and the Otay Water District.

There are currently two sources of recycled water supply to the District. The RWCWRF can treat up to 1.3 MGD. The District also entered into an agreement with the City of San Diego that allows the District to purchase up to 6.0 MGD of recycled water generated by the City's South Bay Water Reclamation Plant (SBWRP).

Previous planning studies have evaluated various wastewater treatment and disposal options available to the District and the County. These studies have indicated that local treatment and marketing of recycled water are economical and preferable under certain conditions, and Metro System wastewater disposal is superior under other conditions. The primary factors affecting the comparison of the options available are total wastewater collected for disposal, total costs of local and Metro System service, revenues from the sale of recycled water, and risk exposure to future costs in the Metro System.

The purpose of this project is to prepare a comprehensive *Wastewater Management Plan* that considers required improvements to the District's wastewater collection system and identifies a preferred strategy for future wastewater management and recycled water generation and purchase. The scope of services for the project generally includes the following:

- Update of the wastewater flow projections for the Jamacha Basin.
- Identification of wastewater collection system improvements and costs that will accommodate projected wastewater flows.
- Determination of additional recycled water supplies needed through 2030.
- Review of potential sources and costs of additional recycled water supplies.
- Identification and analysis of local and regional options available to the District for future wastewater management and recycled water supply to identify a preferred strategy.
- Development of recommended wastewater system improvements and costs for consideration in the District's wastewater capital improvement program.

Summary of Conclusions

The work conducted in this *Wastewater Management Plan* yields the following conclusions:

Wastewater Flow Projections

- The total Jamacha Basin wastewater generation, including connected and unconnected properties are projected to increase from 2.48 MGD in 2010 to 2.96 MGD in 2030.
- Wastewater generation in the District's service area within the Jamacha Basin, from connected **and** unconnected properties, is projected to increase from 1.84 MGD in 2010 to 2.15 MGD in 2030
- Wastewater generation in the County's service area within the Jamacha Basin, including connected **and** unconnected properties, is projected to increase from 0.64 MGD in 2010 to 0.81 MGD in 2030.

Wastewater Collection System

- The existing collection system has three problem areas that do not meet system performance criteria under peak flow conditions. These problem areas can be corrected by replacing the existing undersized sewer pipes.
- One of the existing problem areas is along Campo Road in a section of 10-inch pipe that has been converted from a forcemain to a gravity pipe, and is

undersized to act adequately as a gravity pipe. The District wants the entire length of this pipe replaced with a 15-inch gravity pipe.

- The existing collection system has two additional areas that do not meet system performance criteria under 2030 peak flow conditions. The undersized sewer pipes in these areas should also be replaced as funds become available.

Recycled Water Supply and Demand

- The District's existing recycled water supply consists of an average of 1.0 MGD from the RWCWRF and up to 6 MGD annually from the SBWRP. Due to problems with wastewater supply to SBWRP, other large demands taking priority, etc., the actual peak availability of recycled water from the SBWRP has recently been only 5.3 MGD. These problems are anticipated to be corrected by 2015.
- The District projects that its recycled water volumetric demand will increase from 4,074 AFY in 2010 to 8,000 AFY in 2035.
- The District will begin seeing deficits in monthly recycled water supply by 2020 during the peak demand months. The deficits during the two peak demand months are projected to grow from approximately 670 AF in 2020 to 1,100 AF in 2035. The deficits are also expected to occur for over half the year. These deficits are not annual and can be mitigated if the District/SBWRP agreement can be amended to allow the District to take its contracted amount at up to two times its annual average rate during peak demand months.
- The District is already seeing supply deficits in meeting peak day recycled water demands and has had to occasionally supplement with potable water. The peak day supply deficit is projected to grow from approximately 1.0 MGD in 2010 to 7.3 MGD in 2035. The deficits can be managed with appropriate recycled water system storage and a modification to the District/SBWRP agreement, as described above.
- Potential additional supplies of recycled water include the following sources:
    - Expansion of the RWCWRF
    - Additional purchases from the City of San Diego SBWRP
    - Purchase of recycled water from a potential new City of Chula Vista regional WRF
    - A potential new joint WRF with San Diego County
    - A new joint WRF with the International Boundary and Water Commission at the South Bay International Wastewater Treatment Plant.

Future Wastewater and Recycled Water Management Options

- Future wastewater treatment options include the RWCWRF, discharge to the Metro System, and potential partnership with the County in a new 10 MGD water reclamation plant.
- Five overall future wastewater management and recycled water options were selected for economic evaluations:
    - Option A – maintain RWCWRF at 1.3 MGD
    - Option B – expand RWCWRF to 2.6 MGD
    - Option C – expand RWCWRF to 3.9 MGD
    - Option D – decommission RWCWRF and send all flow to Metro
    - Option E – decommission RWCWRF and build joint plant with County
- The evaluation of RWCWRF options considered onsite solids handling and no onsite solids handling. The joint District/County plant options considered only onsite solids handling consistent will all previous planning efforts. All options involving discharge of flows to Metro included consideration of the Point Loma WWTP remaining a primary treatment plant and potential upgrade to a secondary treatment plant.
- A detailed present worth cost evaluation of the five primary management options through 2030 lead to the following conclusions:
    - Option A has the lowest present worth cost, followed by Option B (expand RWCWRF to 2.6 MGD), then Option C. This is due to the existing investment in RWCWRF and the avoidance of Metro costs and additional recycled water purchases.
    - Option D has the highest present worth due to the existing cost structure, potential for Point Loma WWTP upgrade, and need to purchase additional Metro and County system capacity.
    - The lowest cost options involve onsite solids handling, purchase of recycled water from a Chula Vista WRF, and avoidance of costs for a Point Loma WWTP upgrade.
    - For all RWCWRF expansion options (Options A, B, and C), construction and operation of onsite solids handling is more cost-effective due to the potential to reduce Metro discharges and costs.
    - Abandoning the RWCWRF and relying on Metro or a new joint District/County WRF is significantly more costly than retaining RWCWRF at any of the three capacities evaluated. This reinforces the value of the existing plant and the District's Metro/County system capacity ownership.

- Purchase of recycled water from a new Chula Vista WRF appears to be more cost-effective than purchase from the SBWRP due to the current "take or pay" provision in the SBWRP agreement.

Wastewater Collection System Recommendations

Hydraulic Model

The existing hydraulic model was last calibrated in 2006 and should be recalibrated in the next planning effort. Typically, a hydraulic model is calibrated every 5 years as changes in development occur or modeled system components (pump stations and pipelines) are updated. The District should also consider calibrating the model using predictive hydrologic methods in the next model update. In terms of versatility and range of applications, the predictive hydrologic method far exceeds the capabilities of the peaking factor methodology which is currently utilized.

Recommended Wastewater System Improvements

Table ES-1 summarizes the schedule and capital cost opinions for the recommended wastewater collection system improvements. Figures ES-1 and ES-2 illustrate the recommended improvements.

Table ES-1. Recommended Wastewater Collection System Improvements

Project No.	Description		Location	Unit Cost ($/LF)[1]	Conceptual Cost Opinion ($)	
					Existing	2030
Collection System Pipes						
CIP #1	12-inch	36 LF	Near Fury Ln and Jamacha Rd	1,020	$37,000	--
CIP #2	24-inch	91 LF	Near Hillsdale Rd and Jamacha Rd	2,040	$190,000	--
CIP #3	15-inch	9,225 LF	Along Campo Road from Avocado Rd to Singer Lane	900	$8,300,000	--
CIP #4	15-inch	900 LF	Near Jamacha Rd and Donahue Dr	1,275	--	$1,150,000
CIP #5	15-inch	1,235 LF	Along Ivanhoe Ranch Rd upstream of Cottonwood Pump Station	1,275	--	$1,570,000
Total					**$8,527,000**	**$2,720,000**

Note:
1. January 2012 Costs (ENR CCI = 9176). Includes 30% for engineering and administration, 10% for contractor bonding and insurance, and 30% for project contingencies.

CIP #3 involves replacement of the former 10-inch forcemain in Campo Road that currently acts as a gravity pipe. The entire stretch of this pipe should be replaced with a new 15-inch gravity sewer pipe.

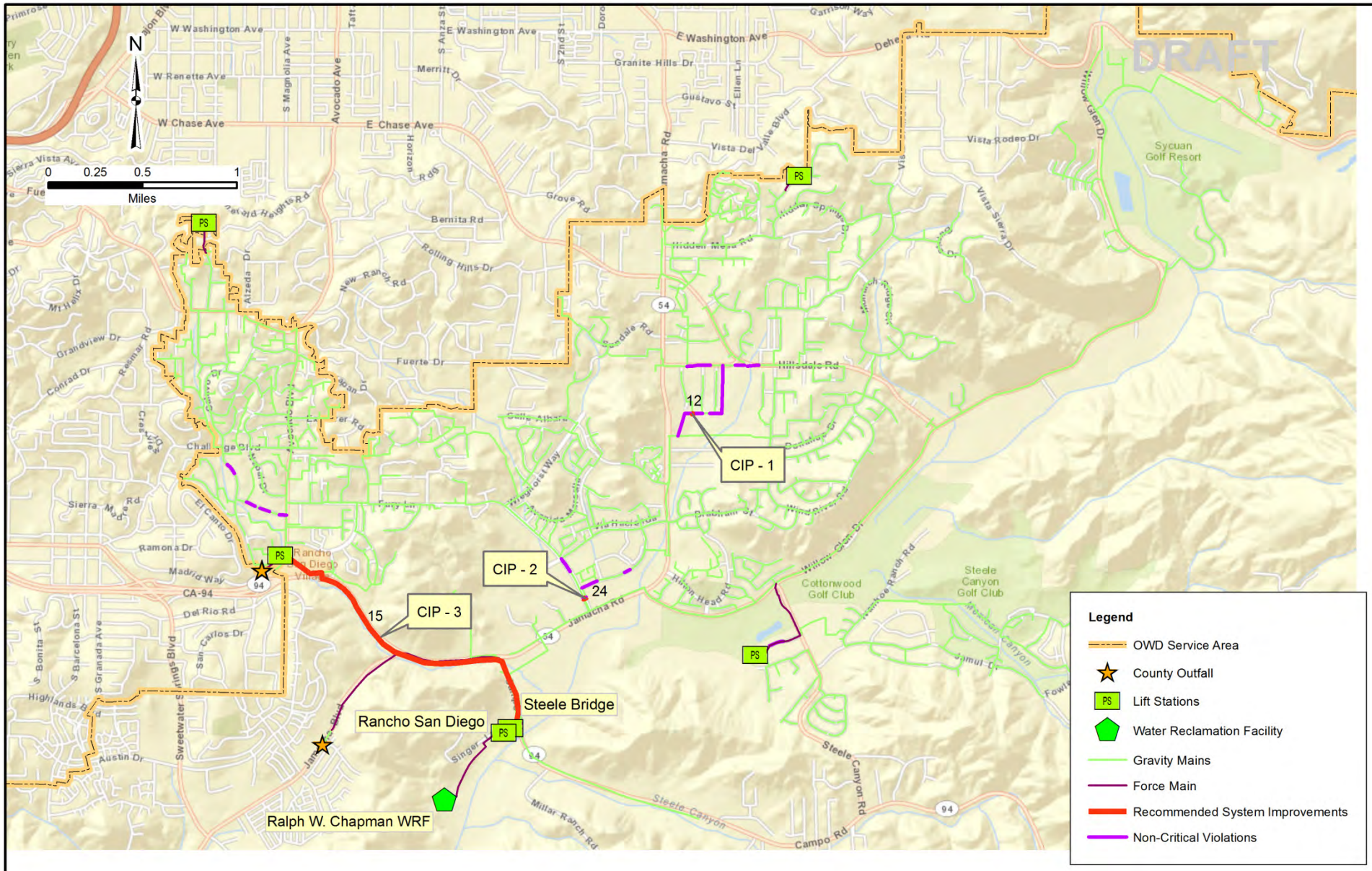

OTAY WATER DISTRICT

Wastewater Management Plan

EXISTING SYSTEM IMPROVEMENTS

April 2013

FIGURE ES-1

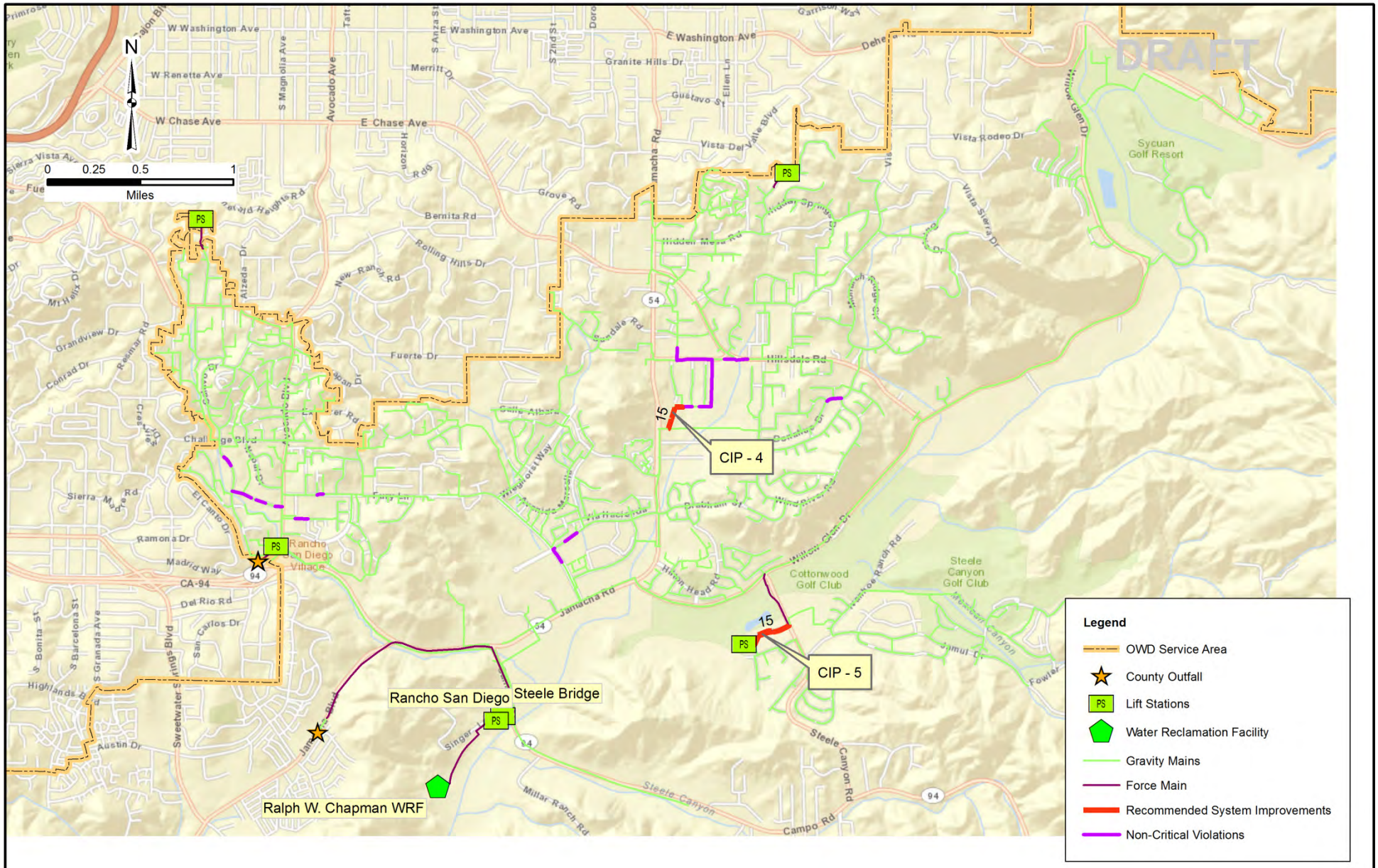

OTAY WATER DISTRICT

Wastewater Management Plan

FUTURE SYSTEM IMPROVEMENTS

April 2013

FIGURE ES-2

Recommended Wastewater Management and Recycled Water Strategies

The recommended wastewater and recycled water management strategies for consideration by the District are as follows.

- Retain and maintain the RWCWRF at its current capacity. This recommendation, however, does not preclude a future expansion of RWCWRF capacity if additional reclaimed water for the District cannot be obtained from a new assumed Chula Vista WRF or from the SBWRP.
- If regulatory restrictions prohibit the use of the existing reclaimed water pipeline to achieve required chlorine contact times before expansion of the RWCWRP, then plan, design, and construct a chlorine contact chamber. **The estimated capital costs for the chlorine contact chamber is $3,420,000** (includes 30 percent for engineering and administration, 10 percent for contractor bonding and insurance, and 30 percent for project contingencies).
- Plan, design, and construct on-site solids handling facilities on the RWCWRF site for a capacity of 1.3 MGD expandable to 2.6 MGD. **The estimated capital cost for the on-site solids handling facilities is $5,690,000** (includes 30 percent for engineering and administration, 10 percent for contractor bonding and insurance, and 30 percent for project contingencies).
- Target the start-up date for RWCWRF on-site solids handling as early as possible, but no later than 2015, to avoid potential Point Loma WWTP upgrade costs.
- Confirm that construction and operation of RWCWRF on-site solids handling facilities will preclude significant discharge to the Metro System, except on plant maintenance or emergency events.
- Upon construction of RWCWRF on-site solids handling, re-determine new quality and resulting unit costs for Metro discharge.
- Renegotiate the SBWRP recycled water purchase agreement to allow short-term, peak month and peak-day purchases of recycled water from the 6 MGD limit stated in the contract to a new limit of 12 MGD. Also, renegotiate the agreement to remove the “take or pay” provision.
- If the take or pay provision of the SBWRP agreement cannot be negotiated out, support the construction of a Chula Vista WRF and negotiate a contract to take all recycled water produced by that plant.
- Perform a District recycled water storage evaluation to assess daily and peak month water balances to assure that projected peak period recycled water demands can be achieved by the combination of RWCWRF, SBWRP/Chula Vista WRP recycled water purchases with no or little supplementation by other water sources, such as SDCWA water.

1.0 INTRODUCTION

1.1 Background

The Otay Water District (District) is located in the southern portion of San Diego County. The District provides wastewater service to a portion of the land area within the Jamacha Basin, which is located within its North District. The County of San Diego also provides wastewater service in a portion of Jamacha Basin. Wastewater flows from each agency customers are conveyed in joint collection and pumping systems.

Wastewater generated in Jamacha Basin can be discharged into the City of San Diego Metropolitan Wastewater System (Metro System) up to the District and County contract capacity rights in the system. The District owns and operates the Ralph W. Chapman Water Reclamation Facility (RWCWRF) within the Jamacha Basin. The RWCWRF is operated as a skimming or stripping facility, whereby wastewater flows generated within Jamacha Basin are pumped to the RWCWRF and treated to produce recycled water, which is used to meet a portion of the District's existing recycled water irrigation demand. All of the remaining wastewater flows are discharged into the Metro System via the County's Rancho San Diego Outfall Facilities (RSDOF) and the downstream Spring Valley Outfall (SVO). The District has capacity rights within the RSDOF and the SVO of 1.2 MGD, and slightly more in the Metro System. The design capacity of the RSDOF is 4.5 MGD. The 2010 wastewater collection rates within the Jamacha Basin from connected sewer customers was about 1.3 MGD for the District and about 0.65 MGD for the County.

There are currently two sources of recycled water supply to the District. The RWCWRF can treat up to 1.3 MGD of wastewater to produce recycled water to meet a portion of the District's demands. The District also entered into an agreement with the City of San Diego in 2003 that provides for recycled water supply from the City's South Bay Water Reclamation Plant (SBWRP). The agreement allows the District to purchase up to 6.0 MGD of recycled water generated by the SBWRP.

Previous planning studies have evaluated various wastewater treatment and disposal options available to the District and the County. These studies have indicated that local treatment and marketing of recycled water are the economical and preferable outcome under certain conditions, and Metro System wastewater disposal is superior under other conditions. The primary factors affecting the comparison of the options available are total wastewater collected for disposal, total costs of local and Metro

System service, revenues from the sale of recycled water, and risk exposure to future costs in the Metro System.

1.2 Project Purpose and Scope

The purpose of this project is to prepare a comprehensive wastewater management plan that considers required improvements to the District's wastewater collection system and identifies a preferred strategy for future wastewater management and recycled water generation and purchase. The project also includes assistance in the preparation of a State of California Program Environmental Impact Report, which encompasses the recommendations of the Wastewater Management Plan. The scope of services for the project generally includes the following:

- Update of the wastewater flow projections for the Jamacha Basin.
- Analysis of the wastewater collection system using the District's existing wastewater system hydraulic model to identify existing system deficiencies and to identify system improvements and costs that will correct deficiencies and accommodate projected wastewater flows.
- Analysis of existing and projected recycled water demands to determine additional recycled water supplies that are needed currently and through 2030.
- Review of potential sources and costs of additional recycled water supplies.
- Identification and analysis of local and regional options available to the District for future wastewater management and recycled water generation and purchase to identify a preferred strategy or strategies.
- Development of a capital improvement program for the recommended collection system and wastewater facility improvements.
- Assistance in the preparation, public noticing, and regulatory approval of the Program Environmental Impact Report (PEIR) that encompasses the Wastewater Management Plan recommendations.

This Wastewater Management Plan contains the findings and results of the first six bullet items above. The PEIR assistance and documentation is provided separately.

2.0 WASTEWATER FLOW PROJECTIONS

This chapter presents updated wastewater flow projections through 2030, including flows from San Diego County and Otay Water District collection service areas.

2.1 Study Area

The study area for this Wastewater Management Plan is the watershed drainage basin known as the Jamacha Basin, which is located in the northern portion of the District's water service area. Figure 2-1 shows the Jamacha Basin and the boundaries of the District's water service area in relation to the wastewater collection area. As shown on Figure 2-1, the Jamacha Basin includes a portion of San Diego County's wastewater service area in addition to the District's service area. The 16,820-acre Jamacha Basin drains to the Rancho San Diego Pump Station (RSDPS) that is owned and operated by the County and is located on Singer Lane just off of Campo Road. The RSDPS pumps wastewater collected from the Jamacha Basin to the County SVO facilities. Just upstream of the RSDPS, the District's Steele Bridge Pump Station (SBPS) diverts up to 1.3 MGD of wastewater to the District's RWCWRF. The RWCWRF treats up to 1.3 MGD of wastewater and has recently produced an average of 1.0 MGD of recycled water. Treatment solids and sludge are pumped back to the RSDPS. The remaining flows from the District and County service areas and RWCWRF solids and sludge are pumped to the SVO, and the flow continues to the Metro System and ultimately to the Metro System Point Loma Wastewater Treatment Plant (WWTP) for treatment and disposal.

The District currently provides sewer service to over 4,000 customers within the Jamacha Basin, and has the latent powers to provide sewer service to potential future sewer customers in the study area. Most current District wastewater customers are in areas west of the County of San Diego Policy I-107 Urban Limit Line as shown on Figure 2-1.

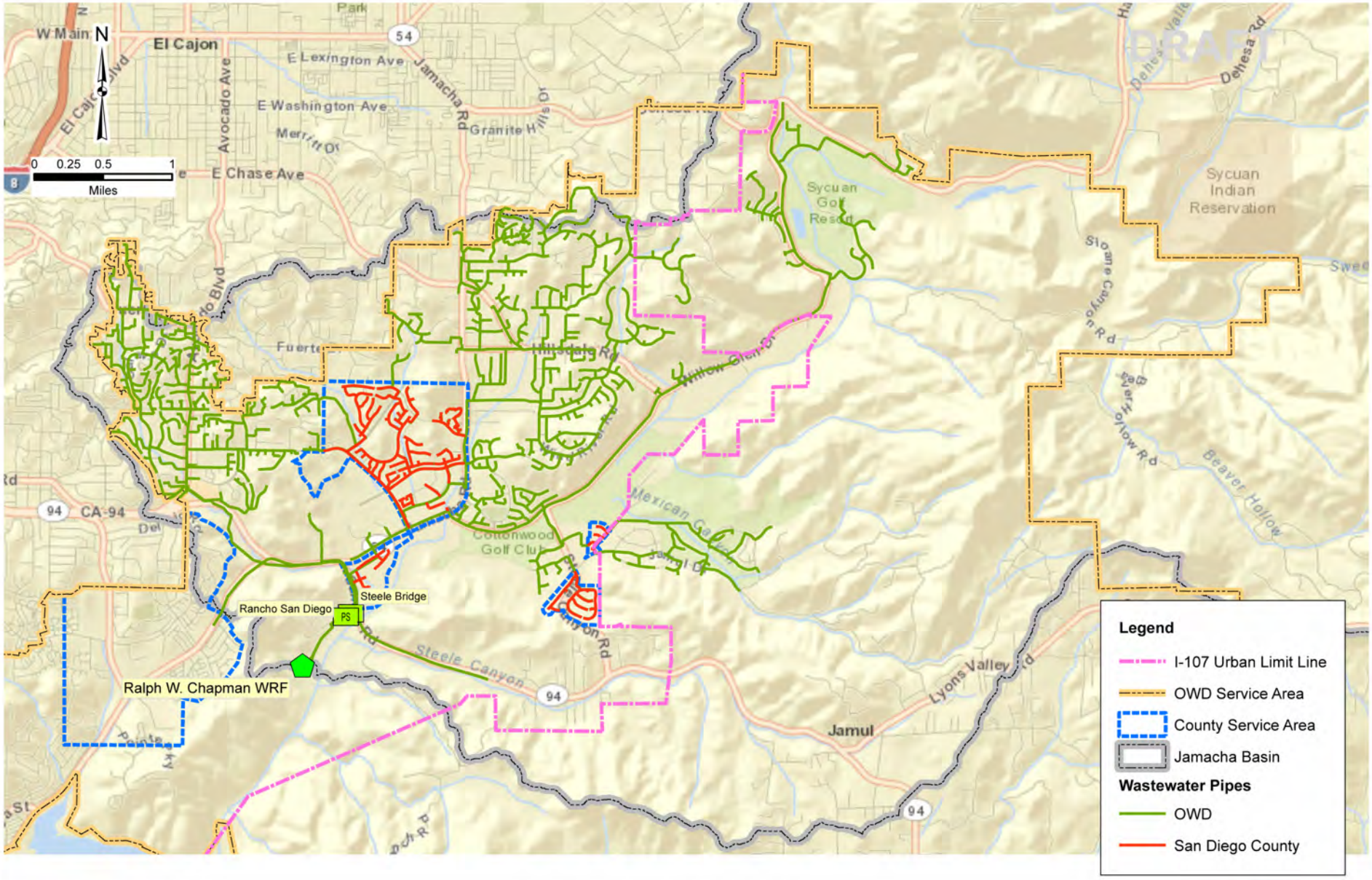

OTAY WATER DISTRICT

Wastewater Management Plan

STUDY AREA

October 2012

FIGURE 2-1

2.2 Previous Wastewater Flow Projections

In April, 2010, the County completed the most recent wastewater flow projections for the Jamacha Basin as part of its RSDPS Sewer Flow Projection Study. The study was a precursor to the preliminary design phase for upgrading pumping and wet well capacity at the RSDPS. The County based this effort on the San Diego Association of Governments (SANDAG) 2030 Regional Growth Forecast population projections. Specifically, the population projections of the Series 11 – 2030 San Diego Regional Growth Forecast Update, completed in April 2008, were utilized.

Unit per capita wastewater generation rates were developed and calibrated to wastewater flows monitored by the County. The calibrated unit flow factors were 80 gallons per capita per day (80 gpcd) for residential populations and 25 gpcd for employment populations. Typical design and planning standards for agencies in San Diego County assume per capita wastewater generation rates between 60 to 100 gpcd for residential and 15 to 35 gpcd for employment populations. Therefore, the calibrated unit generation rates fall within industry standards.

The County cross-referenced populations with permitted parcel data to determine existing and projected population for properties with existing sewer permits from either agency. The balance of the population projections were attributed to vacant parcels and parcels that were occupied but did not have a sewer permit.

The methodology for developing parcel-based wastewater flow projections in the 2010 County study is used in this Wastewater Management Plan. Updated (2012) population projections from SANDAG were utilized, and unit wastewater flow factors are calibrated to recent District wastewater metering data.

2.3 Population Projections

Population projections of the Series 12 – 2030 San Diego Regional Growth Forecast Update, completed in May 2012, were obtained from SANDAG. SANDAG provided the projections for Master Geographic Reference Areas (MGRAs), which are similar in size to census blocks in urban areas and census block groups in suburban and rural areas. Property parcel data in GIS was then overlaid on the MRGA data to develop population data at the parcel level. The data included residential population estimates for 2008 through 2030 and employment estimates for 2015 through 2030. SANDAG indicated that employment population estimates for 2008 and 2010 were not available due to confidentiality concerns. Table 2-1 summarizes the population projections

provided by SANDAG. The SANDAG data was cross-referenced with parcels that had wastewater permits from either agency to identify permitted parcels which are connected to the wastewater system. Unpermitted (unconnected) parcels were either designated as vacant or on individual septic systems (occupied parcels that were categorized as unpermitted were assumed to be on septic). Figure 2-2 shows the parcels within the District service area that are assumed to be on septic.

Table 2-1. Existing and Projected Populations within the Jamacha Basin[1]

Year	Permitted/Connected				Unconnected[4]				Total	
	County		District		Vacant		Septic[2]			
	Res	Emp[3]	Res	Emp[3]	Res	Emp[3]	Res	Emp[3]	Res	Emp[3]
2008	8,956	--	16,390	--	2,176	--	3,635	--	31,157	--
2010	7,351	--	15,790	--	2,156	--	3,641	--	28,938	--
2015	9,101	2,011	16,817	2,768	2,207	731	3,691	1,087	31,816	6,597
2020	9,136	2,020	16,931	2,806	2,591	735	3,697	1,107	32,355	6,668
2025	9,262	2,020	17,179	2,807	2,907	737	4,633	1,116	33,981	6,680
2030	9,288	2,018	17,532	2,817	3,099	741	4,722	1,137	34,641	6,713

Notes:
1. SANDAG Series 12 Forecast. Res – Residential, Emp – Employment.
2. Occupied but unpermitted parcels assumed to be on septic.
3. Employment population not available from SANDAG.
4. Includes unconnected parcels in both County and District service areas.

2.4 Calibration of Unit Wastewater Flow Factors

A calibration check was made of the unit wastewater generation factors used by the County in its 2010 study. The calculated 2008 and 2010 wastewater flows using the unit factors were compared against the District's wastewater flow monitoring data. Table 2-2 summarizes the calibration check. The County is currently updating its wastewater master plan for the portion of its service area that includes the Jamacha Basin. The County provided its most recent population projections, which had been updated since its 2010 RSDPS study (although the updates were also based on the Series 11 data). The employment population estimates for 2008 and 2010 provided by the County were used to calibrate unit wastewater flow factors.

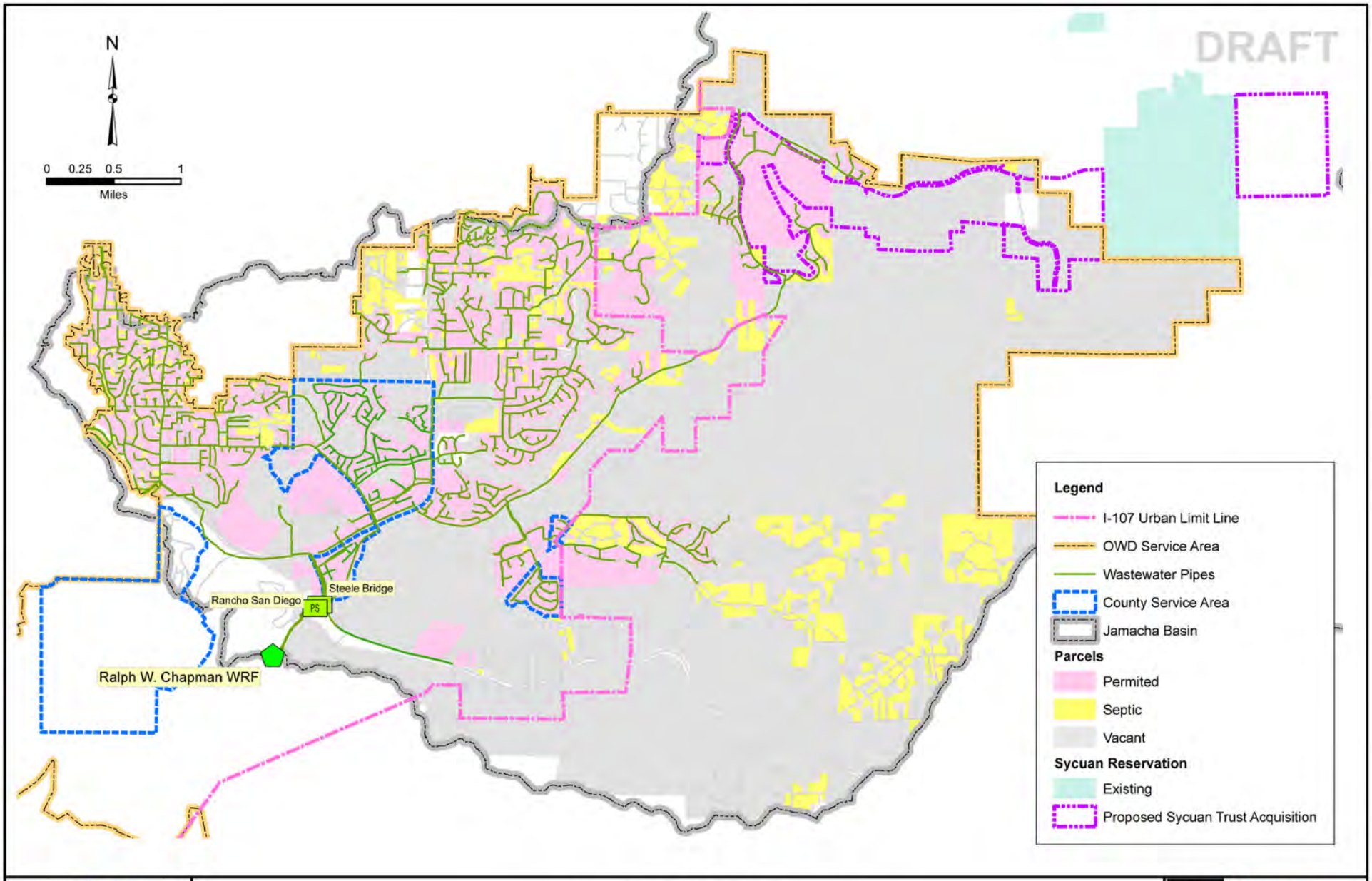

OTAY WATER DISTRICT

Wastewater Management Plan

WASTEWATER GENERATION PARCELS

October 2012

FIGURE 2-2

Table 2-2. Calibration Summary of Unit Wastewater Generation Factors

Year	Total County and District Permitted/Connected Populations		Total County and District Calculated Wastewater Flows[2] (MGD)	Total District Metered Flows (MGD)	Percent Difference
	Residential	Employment[1]			
2008	25,346	5,592	2.17	2.06	- 5%
2010	23,141	5,335	1.98	1.97	- 1%

Notes:
1. From County-provided (January 2012) most recent updates of SANDAG Series 11 data.
2. Based on 80 gpcd for Residential and 25 gpcd for Employment populations.

The calibration check of the unit wastewater factors indicate a maximum difference between calculated and metered wastewater flows of 5 percent. This is considered acceptable for master planning purposes. Thus, the unit factors of 80 gpcd for residential and 25 gpcd for employment populations were used in updating the wastewater flow projections.

2.5 Wastewater Flow Projections

Table 2-3 summarizes the updated wastewater flow projections for the Jamacha Basin. The table includes estimated flows from the Sycuan Indian Reservation as documented in the Final Environmental Assessment, Sycuan Band of the Kumeyaay Nation Fee-to-Trust (August 2011). The environmental assessment covers, among other activities, construction of economic developments on the Reservation, including an Outdoor Events Center with limited parking for recreational vehicles (RVs) operated in conjunction with the existing Sycuan Resort; relocation of the Tribe's Equestrian Center to maximize use of existing trails near the Sycuan Property; creation of additional Tribal housing to accommodate Tribal growth; and, construction of permanent facilities for the Tribe's annual Pow Wow event. Figure 2-2 also shows the location of the planned Sycuan developments. The Sycuan development will become part of the District's service area, and it is assumed that all facilities will be in place and operating by 2020.

Table 2-3. Updated Wastewater Flow Projections for the Jamacha Basin

Year	District					County				Basin Total
	Permitted/ Connected	Unconnected		Sycuan	District Total	Permitted/ Connected	Unconnected		County Total	
		Vacant	Septic				Vacant	Septic		
2010	1.35	0.18	0.32	0	1.84	0.64	0	0	0.64	2.48
2015	1.41	0.18	0.32	0	1.92	0.78	0	0	0.78	2.70
2020	1.42	0.20	0.32	0.02	1.97	0.78	0.03	0	0.81	2.78
2025	1.44	0.23	0.40	0.02	2.09	0.79	0.02	0	0.81	2.91
2030	1.47	0.25	0.41	0.02	2.15	0.79	0.02	0	0.81	2.96

Most current District and County wastewater customers are in areas west of the County of San Diego Policy I-107 Urban Limit Line as shown on Figure 2-2. This line reflects a regional planning policy that has generally restricted urban development in the area to the east of the line. Discussions are currently underway regarding the future of this policy. The disposition of the policy is currently unknown.

Table 2-4 summarizes the wastewater flow projections for the District's wastewater service area only and delineates the portion of wastewater flows that are generated west and east of the County of San Diego Policy I-107 Urban Limit Line.

Table 2-4. Updated Wastewater Flow Projections for District Service Area

Year	West of I-107 Urban Limit Line			East of I-107 Urban Limit Line[2]	Total
	Permitted/ Connected (MGD)	Unconnected[1] (MGD)	Subtotal (MGD)	(MGD)	(MGD)
2010	1.23	0.23	1.46	0.38	1.84
2015	1.30	0.26	1.56	0.38	1.93
2020	1.31	0.28	1.59	0.39	1.97
2025	1.33	0.31	1.64	0.46	2.09
2030	1.35	0.33	1.68	0.47	2.15

Note:
1. Includes unconnected parcels within the District service area only.
2. Includes Sycuan flows.

THIS PAGE INTENTIONALLY LEFT BLANK

3.0 WASTEWATER COLLECTION SYSTEM ANALYSIS

This chapter summarizes the hydraulic modeling of the District's wastewater collection system for existing and projected future wastewater flow conditions. The modeling results are used to: 1) identify existing system deficiencies, develop recommendations to correct the deficiencies, 3) and determine system improvements to accommodate future growth, and 4) develop estimated improvement costs.

3.1 Existing Wastewater Collection System

The 16,820-acre Jamacha Basin drains to the RSDPS that is owned and operated by the County and is located on Singer Lane just off of Campo Road. The RSDPS pumps wastewater collected from the Jamacha Basin to the SVO facilities. Just upstream of the RSDPS, the District's SBPS diverts up to 1.3 MGD of wastewater to the RWCWRF. The RWCWRF treats up to 1.3 MGD of wastewater and has recently produced an average of 1.0 MGD of recycled water, and returned an average of 0.3 MGD of solids and sludge to the RSDPS. The remaining flows from the District and County service areas are pumped to the SVO, and the wastewater continues to flow to the Metro System and, ultimately, to the Point Loma WWTP for treatment and disposal.

The District's existing wastewater system that was evaluated includes the RWCWRF, pump stations, and collection system pipes. Figure 3-1 illustrates the existing wastewater collection system within the Jamacha Basin.

3.1.1 Ralph W. Chapman Water Reclamation Facility

The District owns and operates the RWCWRF. The existing capacity of the RWCWRF is 1.3 MGD, and the facility is located on a site master-planned for an ultimate build-out capacity of 3.9 MGD.

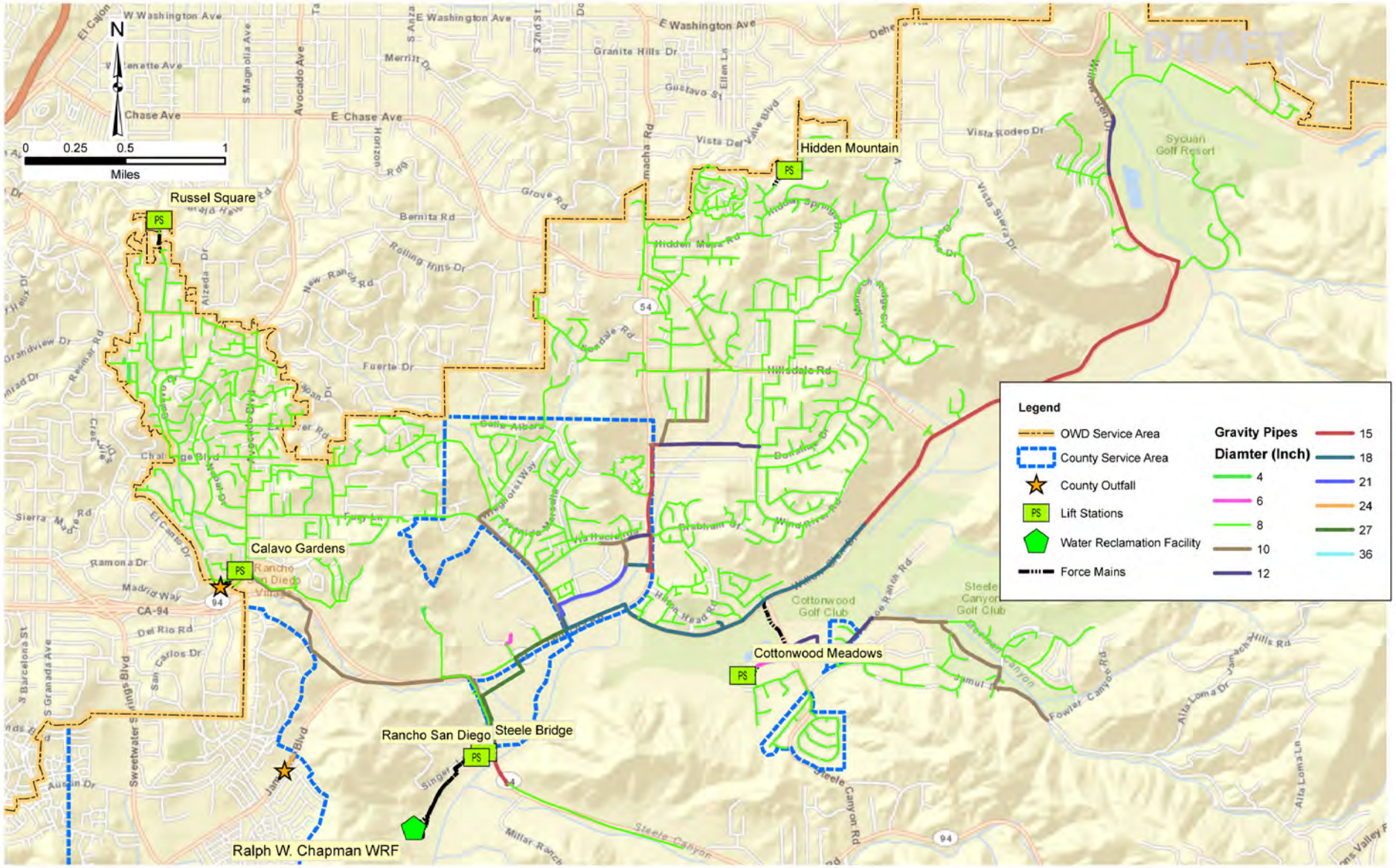

OTAY WATER DISTRICT

Wastewater Management Plan

EXISTING COLLECTION SYSTEM

MALCOLM PIRNIE | ARCADIS

October 2012

FIGURE 3-1

Influent flows to the RWCWRF are conveyed through a 12-inch forcemain from the SBPS. The RWCWRF is a scalping plant, and not all flows from the District wastewater service area are conveyed to the facility. A concrete weir structure near the SBPS diverts flow to the SBPS, and the remaining flow continues to the RSDPS. The RWCWRF employs a series of physical, biological, and chemical processes for advanced treatment of wastewater to yield Title 22 reclaimed water. The plant does not have solids handling facilities. Solids are pumped back to the RSDPS, which, in turn, pumps the wastewater to the SVO.

3.1.2 Pump Stations

The wastewater system has 6 pump stations, as shown on Figure 3-1. Information on the pump station equipment was originally obtained from the District's existing wastewater system hydraulic model (described in Section 3.2) and updated based on information provided by District staff. Table 3-1 summarizes the characteristics of the wastewater pump stations.

Table 3-1. Summary of Wastewater Pump Stations

Pump Station	Number of Pumps	Total Design Capacity (gpm)	Firm Capacity (gpm)	Year Built or Last Refurbished	Wet Well			
					Cross Section	Invert Elevation (feet)	Depth (feet)	Diameter (feet)
Calavo	2	700*	350*	2008	Circular	504.15	20.13	9
Cottonwood	2	510	510	1996	Circular	323	22	8
Hidden Mountain	2	100*	100*	1978	Circular	701.15	14.85	5
Russell Square	2	20*	20*	1984	Circular	783	10	5
Steel Bridge (SBPS)	2	2,400*	1,200*	2008	Circular	299.4	9	9.292
Rancho San Diego (RSDPS)	3	4,500*	3,500*	--	Variable	295.3	19.7	Variable

* Information in the hydraulic model was updated based on information provided by the District.

The Cottonwood, Hidden Mountain and Russell Square Pump Stations convey wastewater from within the collection system, where conveyance via gravity is not feasible due to topography. The Calavo Pump Station does not operate continuously and is used to divert flow from the Calavo drainage basin to the SVO facilities when the RWCWRF is not operating at full capacity or is offline. The SBPS pumps the diverted

flow from the weir structure to the RWCWRF, and the RSDPS pumps the remaining flow from the weir structure to the Spring Valley outfall facilities.

The pump station wet well characteristics derived from the District's existing hydraulic model are also summarized in Table 3-1.

3.1.3 Collection System Pipes

The wastewater system includes approximately 95 miles of collection system pipelines, of which 92 miles are gravity sewers and 3 miles are force mains. The District owns approximately 78 miles of the gravity sewers, and the rest is owned by the County, as shown previously on Figure 2-1.

The gravity sewers range in diameter from 4 inches to 27 inches, with the vast majority (84 percent) of the collection system being comprised of 8-inch diameter pipes. The force mains range in diameter from 4 inches to 24 inches. The 4-inch and 6-inch force mains are associated with the Hidden Mountain, Russell Square and Cottonwood stations, while the 12-inch and 24-inch force mains are associated with the SBPS and RSDPS, respectively.

Table 3-2 provides a summary of the collection system pipelines based on the diameters and type of pipe.

Table 3-2. Summary of Collection System Pipes

Diameter (Inch)	Gravity Sewers		Force Mains	
	Length (feet)	% of Total	Length (feet)	% of Total
4	811	0.2	1,568	9.3
6	835	0.2	3,773	22.3
8	410,955	84.4	--	--
10	25,870	5.3	--	--
12	8,190	1.7	3,400	20.1
15	21,646	4.4	--	--
18	10,226	2.1	--	--
21	2,678	0.5	--	--
24	603	0.1	8,188	48.3
27	5,303	1.1	--	--
Total	487,117	100	16,929	100

3.2 Wastewater System Hydraulic Model

The District provided its existing wastewater system hydraulic model and supporting planning documentation for use in this Wastewater Management Plan. The details of the model development, model calibration, and planning analysis are documented in the 2006 *Sewer Model Calibration, Capacity Analysis, and System Assessment* (2006 Study), which was a part of the District's Sewer System Management Plan (SSMP, completed in 2009).

3.2.1 Model Software and Modeled System

The District's wastewater system hydraulic model was developed in H2OMAP Sewer, Version 7.0 software. The model is an all-pipes model. The entire infrastructure described in the previous section has been included in the model. The RWCWRF is modeled as an outfall, and the return solids line from the RWCWRF to the RSDPS is not included in the model. The concrete diversion structure splitting flow between the SBPS and the RSDPS is modeled as a manhole.

H2OMAP Sewer can run both steady state and extended period analyses. The District's hydraulic model was calibrated under extended period analysis for the dry weather flow condition, and steady state analysis was performed using the peaking factor methodology for the peak flow condition.

The average daily flow in the model's "existing system scenario" is 2.1 MGD (the last model runs were completed in 2006). Of this total flow, 1.9 MGD came from residential sources, and 0.2 MGD came from commercial sources. Separate diurnal patterns were assigned to each load type – residential and commercial.

3.2.2 Model Calibration

The District last calibrated the hydraulic model in 2006 based on data collected from 11 open channel flow meters in 2005. The flow monitoring was performed between January 25, 2005 and March 25, 2005. The model was calibrated for flow on February 8th and February 9th, 2005, which was the driest 2-day period during these two months. Figure 3-2 shows the meter locations and the associated upstream pipes associated with the monitored basins. After model calibration, the collection system was modeled using the peaking factor method. The peaking factors used in the 2006 Study were applied to the updated wastewater flow projections to determine updated peak flow loading conditions. Table 3-3 summarizes the peaking factors developed and used in the 2006 Study. The peak wet weather to average dry weather factor (last column in Table 3-3) was applied to the updated wastewater loadings for each monitored basin.

Table 3-3: Peaking Factors

Flow Meter Basin	Peak Dry Weather to Average Dry Weather Factor	Peak Wet Weather to Peak Dry Weather Factor	Peak Wet Weather to Average Dry Weather Factor
OT01	1.36	1.70	2.32
OT02	1.78	1.60	2.85
OT03	2.85	1.40	3.98
OT04	1.46	1.50	2.19
OT05	1.53	2.70	4.13
OT06	2.84	1.70	4.82
OT07	1.89	1.60	3.02
OT08	1.95	2.10	4.10
OT09	2.13	3.00	6.38
OT10	1.67	2.50	4.16
OT11	1.40	1.80	2.53

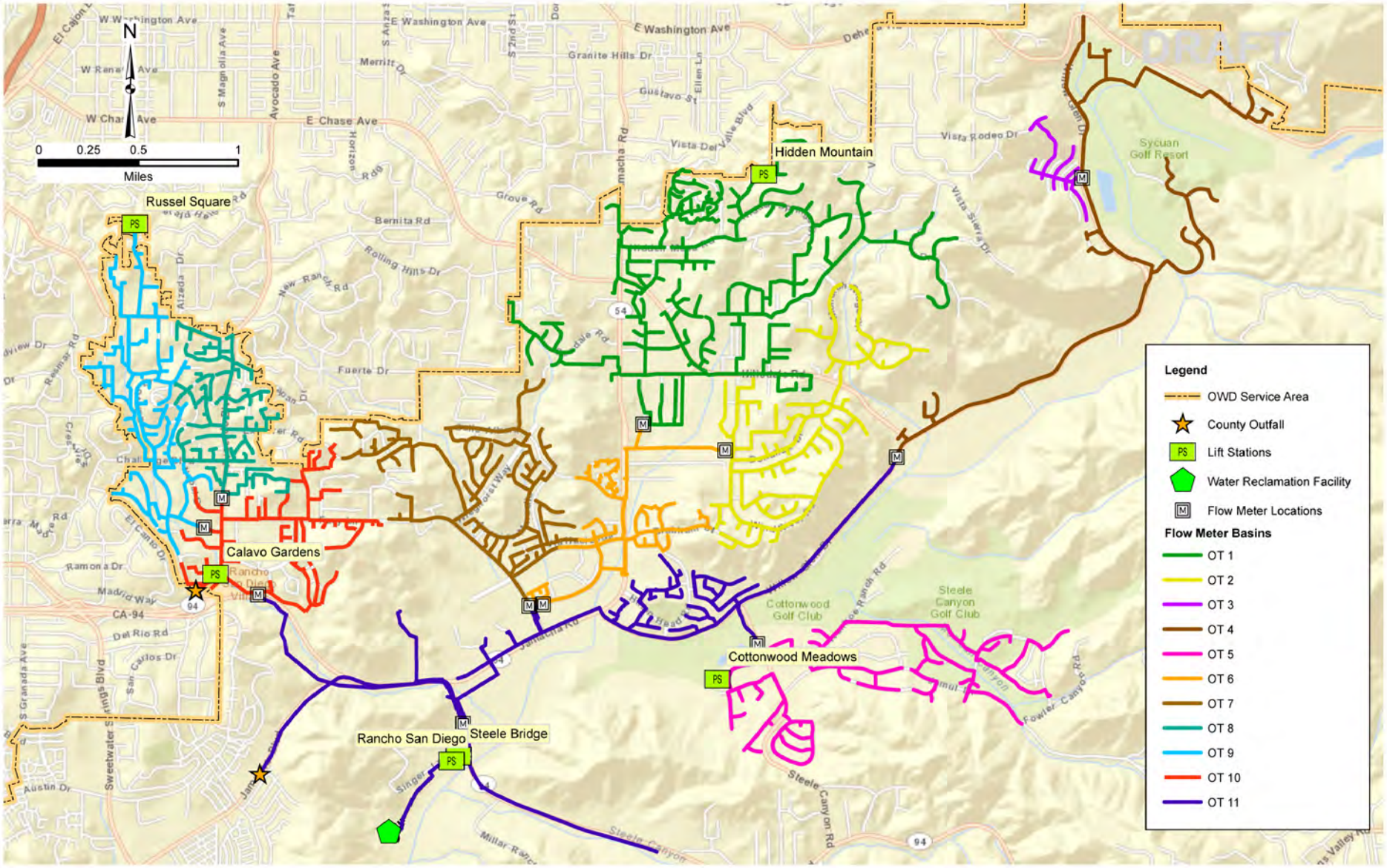

OTAY WATER DISTRICT

Wastewater Management Plan

FLOW METER BASINS

October 2012

FIGURE 3-2

3.2.3 Assessment of Existing Hydraulic Model

A cursory review was conducted on the District's existing hydraulic model to determine functionality and suitability for use in the Wastewater Management Plan. The model was found to be complete and suitable for master planning purposes. However, the following minor limitations should be considered in the next major update of the model (addressing the limitations was not within the scope of services for this Wastewater Management Plan).

The model was last calibrated in 2006. Typically, a hydraulic model is calibrated every 5 years, since during this time period new development (or population decline) within the system can cause changes in the system flows, and, as the existing pipes age, rainfall derived infiltration and inflow (RDII) responses may change. The model should also be calibrated when changes are made to the modeled systems. For example, the pump station modifications previously presented in Section 3.1.2 and other model updates described later in Section 3.2.5 could significantly affect model calibration.

The calibration was also performed using a peaking factor methodology. The peaking factor methodology entails the application of a factor to convert average dry weather flow into peak wet weather flow. This methodology does not provide any information on the type of storm which causes the peak flows. This does not mean that the methodology is flawed, just that the model will only predict the exceedance in the infrastructure and not the frequency of exceedance.

The District should consider calibrating the model using predictive hydrologic methods in the next model update. In terms of versatility and range of applications, it far exceeds the capabilities of the peaking factor methodology. The hydrologic method uses traditional surface hydrology methods to mimic the RDII response and provides a flexible model capable of representing the desired wide range of wet weather conditions. The hydrologic method will predict not only the peak flow but the entire RDII hydrograph. It also allows for a calibrated model to be used as a planning tool by applying a storm that was not part of the calibration period (either a synthetic design storm or an actual historic storm event of record) to the system for planning level evaluation and for conceptual sizing of improvements. This could be important since the District could develop an understanding of the level of control that system improvements might provide (e.g., the frequency, typically in terms of a design storm, beyond which capacity could be exceeded or during which proposed facilities will be expected to perform).

3.2.4 Model Use in the Wastewater Management Plan

The District's existing hydraulic model, with the minor updates to the modeled system, was utilized similar to the modeling last conducted in 2006. The model was further updated with current base wastewater loads from updated wastewater flow projections. Updated wastewater flow projections were described and presented in Chapter 2. Peak flows were determined by applying the previously determined peaking factors to the projected dry weather flows. As indicated in Chapter 2.0, most current District and County wastewater customers are in areas west of the I-107 Urban Limit Line. Since the disposition of the policy behind the line is currently unknown, the wastewater system evaluations focus only on the existing system, and projected wastewater flows are added at the closest model node (manhole) within the specific wastewater drainage basin to assess impacts to the existing system due to future flows.

3.2.5 Hydraulic Model Updates

In addition to the updates made to the pump stations noted in Table 3-1 previously, the model was reviewed and compared to recent information to determine if any additional model elements needed to be updated. There were some locations where the attribute information stored within the modeling database appeared to be incorrect. These were limited to mostly invert elevations that caused significant adversely sloped sewer pipelines that often resulted in surcharged condition in the immediate upstream sewers. The attribute information was corrected, as summarized below in Table 3-4.

Table 3-4. Hydraulic Model Invert Elevation Updates

Model Link ID	Pipe Diameter (Inch)	Location	Comments
SM1369	8	Sundale Road	Upstream Invert Changed
SM1034	10	Near Jamacha Road and Hillsdale Road	Upstream Invert Changed
SM1524	12	Near Lasven Ct and Ivanhoe Ranch Road	Upstream Invert Changed
SM1525	12	Near Lasven Ct and Ivanhoe Ranch Road	Upstream Invert Changed
SM1566	8	Near Stonefield Dr and Tamara Ct	Upstream Invert Changed
SM1720	8	Near Cuyamaca College Dr and Jamacha Rd	Upstream Invert Changed

A comparison was also made of the District's modeled system and a modeled system database obtained from San Diego County, which is currently conducting a wastewater master planning effort for its service area, which includes the Jamacha Basin. Several

differences were noted and provided to the District, which had the differences field verified. After field verification, the updates noted in Table 3-5 were made to the hydraulic model.

Table 3-5. Hydraulic Model Pipe Size Updates

Location	Pipe Size in District Model (inch)	Pipe Size in County Model (inch)	Update Made	Length (feet)
Vista Rodeo Dr	10	8	10-inch to 8-inch	278
Pine Glen Ln	15	8	15-inch to 8-inch	1,062
Willow Glen Ln	15	8	15-inch to 8-inch	227
Rancho San Diego	15	21	15-inch to 21-inch	346
Brabham St	8	10	8-inch to 10-inch	400

Lastly, several capital improvement program (CIP) projects have been completed since 2005 or are in progress. These CIP projects listed in Table 3-6 below were added to the model and were modeled as existing system elements.

Table 3-6. CIP Projects Added to the Hydraulic Model

Location	Update Made	Length (feet)	Source
Avacado Blvd	New 15-inch PVC Pipe	1,601	CIP S2019, S2020 and S2022
Hidden Mesa Rd	New 8-inch PVC Pipe	313	CIP S2019, S2020 and S2023
Louisa Dr	New 8-inch PVC Pipe	985	CIP S2019, S2020 and S2024
Calavo Dr and Challenge Blvd	New 8-inch PVC Pipe	431	CIP S2019, S2020 and S2025

3.3 Analysis of Existing System

The updated wastewater flow estimates for 2010 were used to simulate existing flow conditions within the wastewater system. The existing flows and peaking factors were used to develop updated peak loading conditions, which were then imported into the hydraulic model.

3.3.1 Evaluation Criteria

Table 3-7 summarizes the wastewater system performance criteria that the District and other surrounding jurisdictions use to size and evaluate collection systems.

Table 3-7. Wastewater System Performance Criteria

Parameter			Criteria[1]
Peaking Factor	Peak Flow	Dry Weather	Peaking Factors developed from 2006 *Sewer Model Calibration, Capacity Analysis, and System Assessment* Report[2]
		Wet Weather	
Collection[1] System Pipes	Gravity	Design Criteria	Peak Wet Weather Flow
		Manning's Coefficient	0.01 - Old Pipes 0.011 or 0.013 depending on material - New Pipes
		Minimum Velocity	<= 12 inch - 2 ft/s under peak hour flow >15 inch - 2 ft/s under peak hour flow
		Maximum Velocity	<= 12 inch - 10 ft/s under peak hour flow >15 inch - 10 ft/s under peak hour flow
		Minimum Pipe Size	8 inch
	Force Main	Design Criteria	Peak Wet Weather Flow
		Hazen Williams Coefficient	100 - Old Pipes 120 or 140 depending on material - New Pipes
		Minimum Velocity	3.5 ft/s
		Maximum Velocity	8 ft/s
Depth Ratio[1]	Peak Dry Weather	Future pipes	Design < 12 inch - 0.5 > 12 inch - 0.75
		Existing pipes	Trigger: For all sizes - 1.0[3]
	Peak Wet Weather	Future pipes	Design < 12 inch - 0.5 > 12 inch - 0.75
		Existing pipes	Trigger: For all sizes - 1.0[3]
Pump Stations[1]	Firm Capacity		Largest pump out of service
	Design Criteria		Peak Hour Flow

Notes:
1. Source: Water Agencies' Standards (WAS): Design Guidelines for Water and Sewer Facilities
2. Criteria used in District's 2006 SSMP.
3. Criteria added to assess existing pipes.

Sewer system capacity was determined based on surcharging conditions using the peak water depth to diameter ratio (d/D). For all sewer pipelines less than 12 inches in diameter, any d/D greater than 0.5 is assumed to have a capacity constraint. A d/D

ratio of 0.75 was used as a trigger for all sewers with a diameter of 12 inches or greater. Pump stations were evaluated if the firm capacity (station capacity with the largest pump out of service) was exceeded by the peak wet weather flow. Forcemain velocities were used to determine the cause of the pump station's firm capacity being exceeded. If high forcemain velocities were noted at a station whose firm capacity was exceeded, this would indicate that the capacity constraint is associated with the forcemain. If a station's firm capacity is exceeded but forcemain velocities are low, the capacity constraint is typically associated with the station's pumps being undersized.

3.3.2 Existing System Assessment

To analyze the existing system, loadings from all permitted/connected parcels were assigned and imported to the hydraulic model. The existing average dry weather load of 1.98 MGD was applied to the system. Using the evaluation criteria and peaking factors described above, the existing collection was assessed to determine capacity deficiencies during the peak wet weather loading conditions.

Figure 3-3 shows the results of the system assessment. Overall, the system performed quite well under the peak loading conditions. None of the pump stations had capacity concerns. There were some areas, however, where the system performance exceeded the evaluation criteria for gravity sewers as summarized on Table 3-8.

Table 3-8. Existing System Deficiencies

Name	Location	Criteria Violated
Area 1	Near Fury Ln and Jamacha Rd	Manhole surcharging and d/D > 0.75
Area 2	Near Hillsdale Rd and Jamacha Rd	Manhole surcharging and d/D > 0.75
Area 3	Along Campo Road from Avocado Rd to Singer Lane	Manhole surcharging and d/D > 0.75

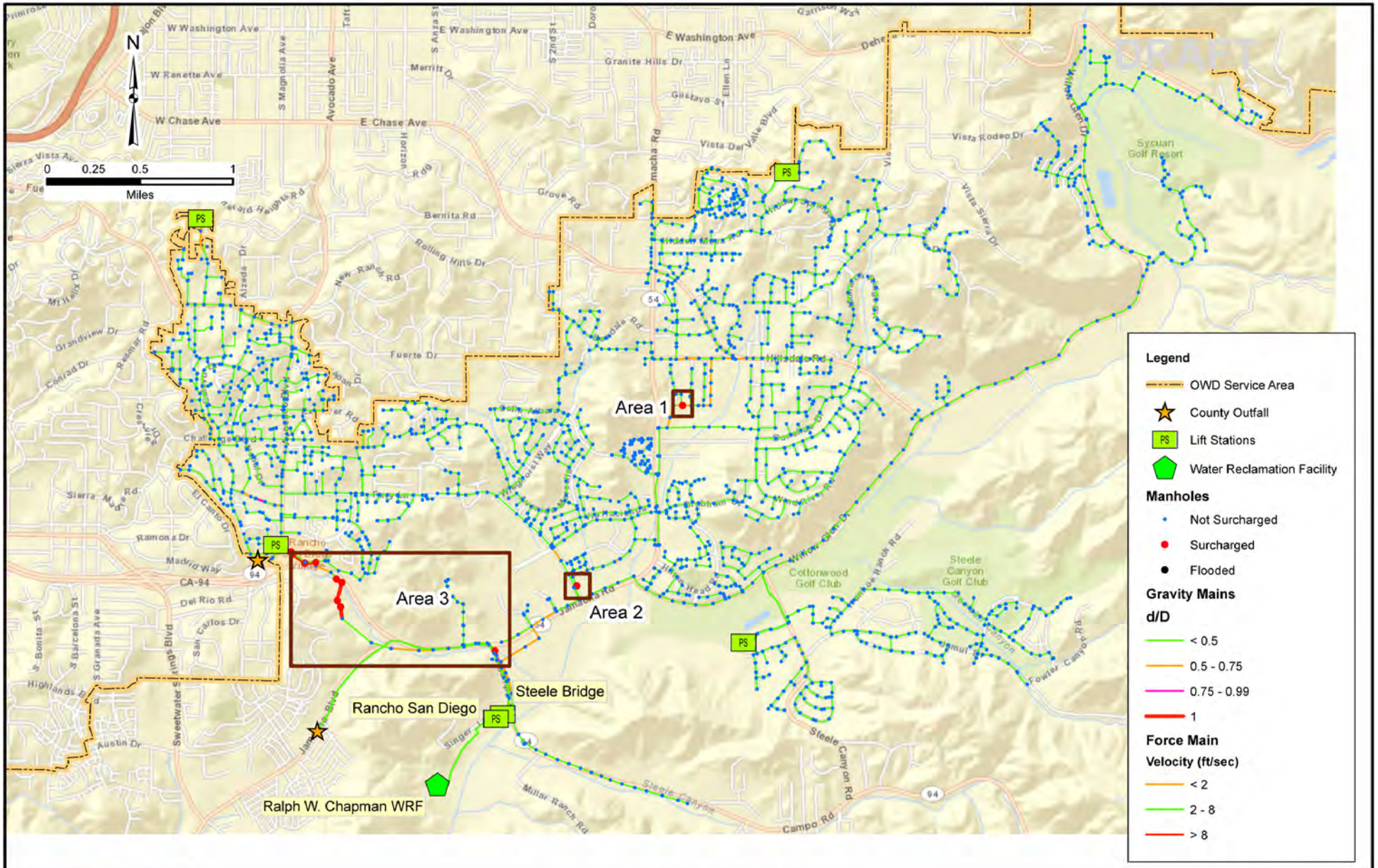

OTAY WATER DISTRICT

Wastewater Management Plan

EXISTING SYSTEM ASSESSMENT

October 2012

FIGURE 3-3

3.3.3 Existing System Improvements

Each of the areas described above was reviewed to identify improvements to address system deficiencies. The water level in manholes and depth to diameter ratios in pipes were studied to assess if the criteria were only moderately violated, or if there was a significant violation. If a manhole was flooded or the sewer was completely surcharged (d/D > 1), then an improvement would be recommended. Areas that violated the evaluation criteria, but had a d/D ratio less than 1, were considered not to be as critical for improvements. It is recommended that the District observe these areas during high flow conditions to verify if unacceptable surcharging does occur.

Based on the hydraulic modeling analysis, the recommended existing system improvements are listed on Table 3-9 and shown on Figure 3-4. The areas that the District should observe for unacceptable surcharging are also shown on Figure 3-4. It should be noted that one of the improvements along Campo Road (Area 3) was specifically requested by the District to convert a forcemain (currently operated as a gravity sewer) to a traditional gravity sewer.

Table 3-9. Recommended Existing System Improvements

Area	CIP	Existing Pipe Size (inch)	Recommendation	New Pipe Size (inch)	Length (feet)	Slope
Area 1	#1	10	Replacement Pipe	12	36	0.002
Area 2	#2	15	Replacement Pipe	24	91	0.002
Area 3	#3	10	Replacement Pipe	15	9225	0.032

3.4 Analysis of Future Conditions

The updated wastewater flow projections and peaking factors were used to develop future peak loading conditions, which were then imported into the hydraulic model to assess future system conditions.

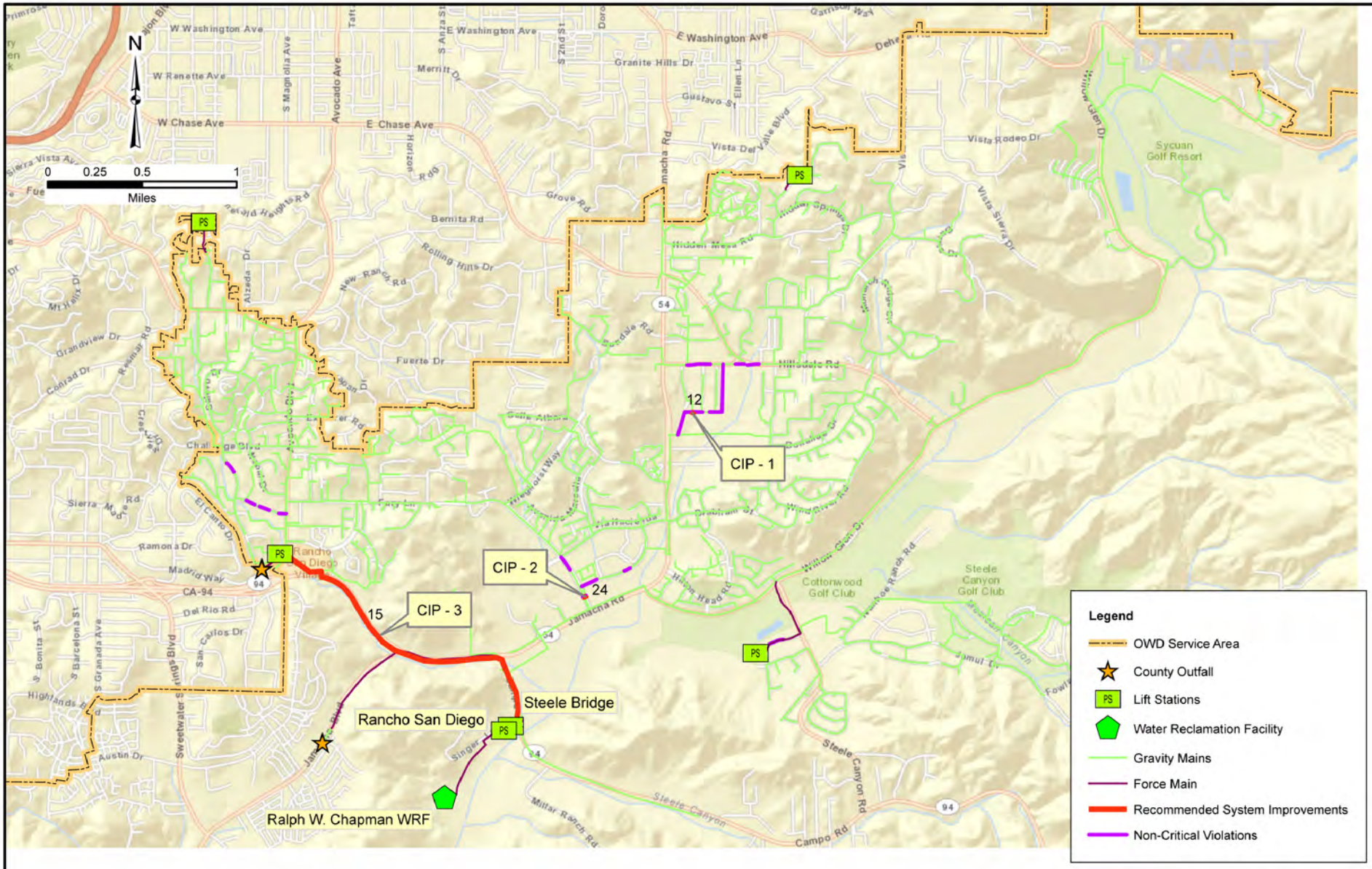

OTAY WATER DISTRICT

Wastewater Management Plan

EXISTING SYSTEM IMPROVEMENTS

October 2012

FIGURE 3-4

3.4.1 Future System Assessment

Initially, the flow projections for 2030 were modeled to determine future system improvements. The hydraulic network, including the improvements recommended in Section 3.3, was used as a basis for assessing how the system will perform for the projected 2030 loading conditions. The average 2030 wastewater loading from the entire service area (2.94 MGD) was applied to the system along with the peaking factors to assess the system under peak wet weather conditions. The future loading of 0.02 MGD from the Sycuan reservation was allocated at the upstream-most manhole on Dehesa Road. The total average wastewater loading for this scenario was therefore, 2.96 MGD. The same system performance criteria that were used for the existing system assessment were used for the future system assessment.

Figure 3-5 shows the results of the future system assessment. Table 3-10 summarizes the areas where violations of the system performance criteria were noted.

Table 3-10. Future System Deficiencies

Name	Location	Criteria Violated
Area 4	Near Fury Ln and Jamacha Rd	Manhole surcharging and d/D > 1.0
Area 5	Along Ivanhoe Ranch Rd upstream of Cottonwood Pump Station	Manhole flooding and d/D > 1.0

3.4.2 Future System Improvements

Each of the areas described above was reviewed to recommend improvements to address system deficiencies. Similar to the existing system improvements, areas where the d/D ratios were greater than 1.0 and observed flooded manholes were given priority for improvements. None of the pump stations had capacity concerns under 2030 loading conditions. Table 3-11 summarizes the resulting system improvements recommended for the 2030 flow conditions, the improvements are also shown on Figure 3-6. Figure 3-6 also shows areas that the District should observe for any future unacceptable surcharging conditions.

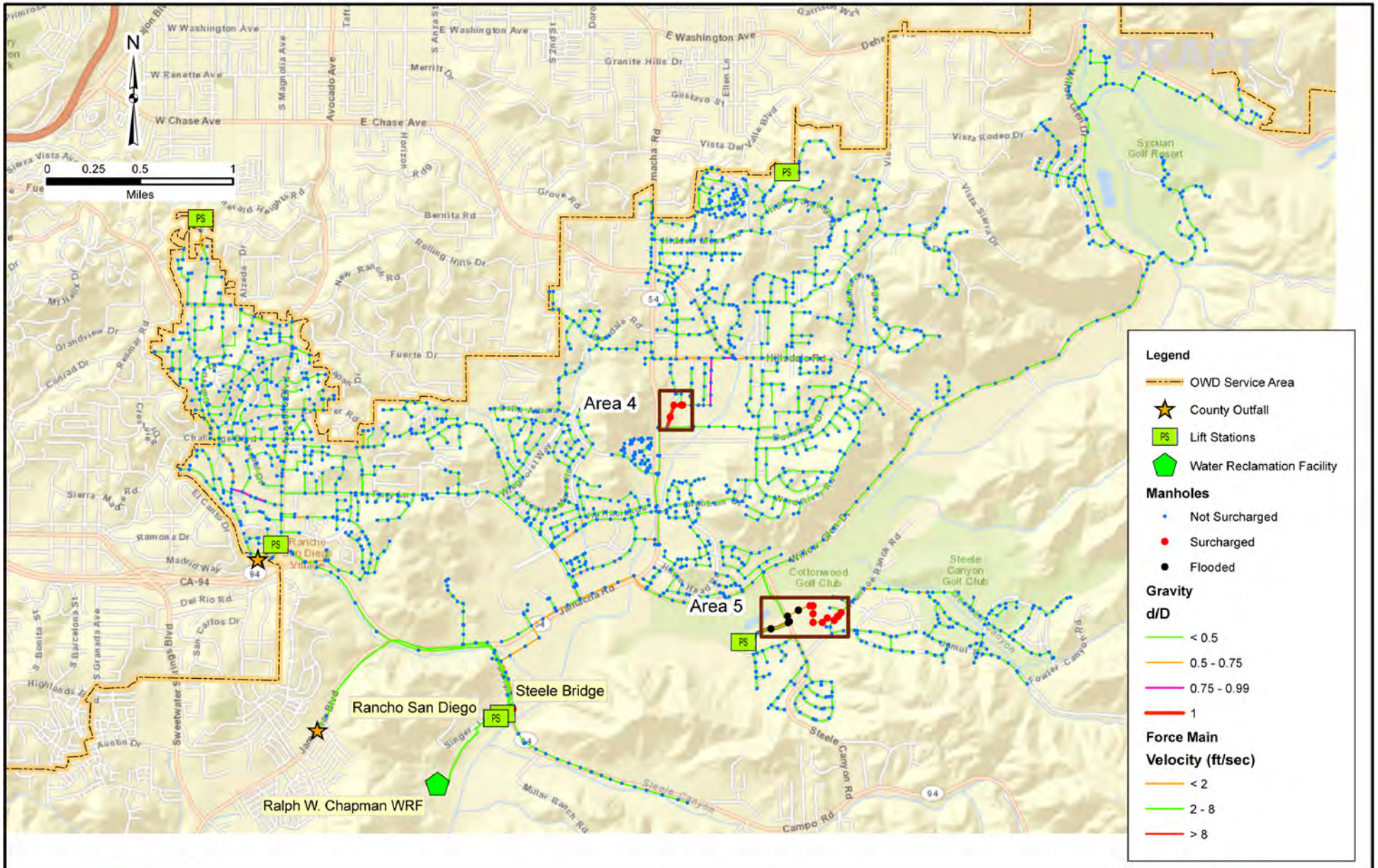

OTAY WATER DISTRICT

Wastewater Management Plan

FUTURE SYSTEM ASSESSMENT

MALCOLM PIRNIE | ARCADIS

October 2012

FIGURE 3-5

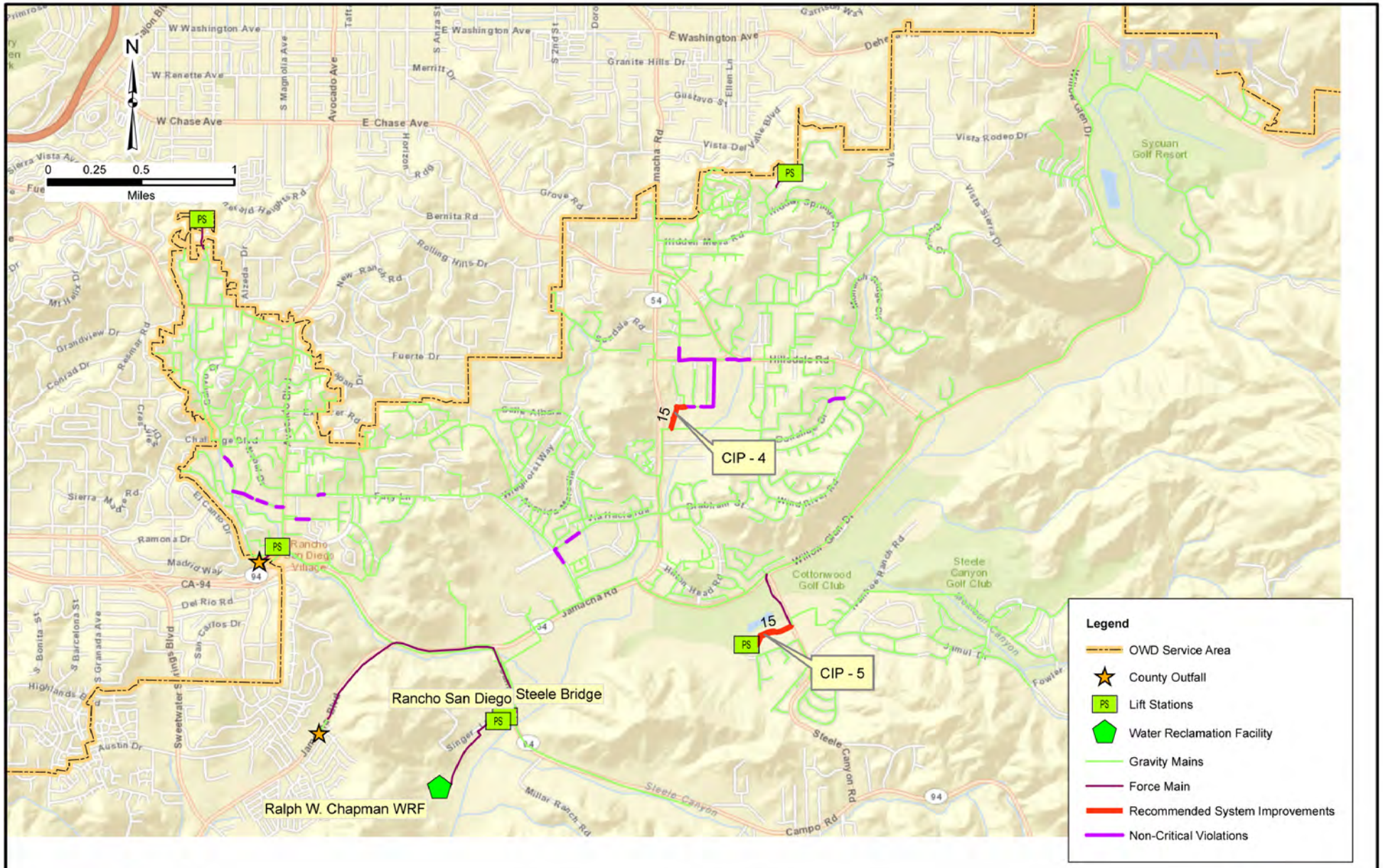

OTAY WATER DISTRICT

Wastewater Management Plan

FUTURE SYSTEM IMPROVEMENTS

October 2012

FIGURE 3-6

Table 3-11. Recommended System Improvements for 2030 Flow Conditions

Area	CIP	Existing Pipe Size (inch)	Recommendation	New Pipe Size (inch)	Length (feet)	Slope
Area 4	#4	10	Replacement Pipe	15	900	0.004
Area 5	#5	8	Replacement Pipe	15	1235	0.004 - 0.015

3.5 Summary of Recommended System Improvements & Conceptual Cost Opinions

Conceptual capital cost opinions were developed for the recommended system improvements described in the previous sections. The cost opinions are based on available recent projects with similar components, manufacturer's budget estimates, standard construction cost estimating manuals, and engineering judgment. The level of accuracy for the cost estimates corresponds to the Class 4 estimate as defined by the Association for the Advancement of Cost Engineering (AACE) International. This level of engineering cost estimating is approximate and generally made without detailed engineering data and site layouts, but is appropriate for preliminary budget-level estimating. The accuracy range of a Class 4 estimate is minus 15 percent to plus 20 percent in the best case and minus 30 percent to plus 50 percent in the worst case.

All cost opinions also include a 30 percent factor for engineering and construction administration, 10 percent for Contractor bonding and insurance, and 30 percent for project contingencies. All costs are in January 2012 dollars referenced to an Engineering News Record Construction Cost Index (ENR CCI) of 9,176.

Table 3-12 summarizes the schedule and capital cost opinions for the recommended system improvements. The estimated total capital cost for the recommended infrastructure to correct existing deficiencies is $8.53 million. To accommodate 2030 wastewater flows, the additional capital cost is approximately $2.72 million.

Table 3-12. Summary of Recommended System Improvements

Project No.	Description		Location	Unit Cost ($/LF)[1]	Conceptual Cost Opinion ($)	
					Existing	2030
Collection System Pipes						
CIP #1	12-inch	36 LF	Near Fury Ln and Jamacha Rd	1,020	$37,000	--
CIP #2	24-inch	91 LF	Near Hillsdale Rd and Jamacha Rd	2,040	$190,000	--
CIP #3	15-inch	9,225 LF	Along Campo Road from Avocado Rd to Singer Lane	900	$8,300,000	--
CIP #4	15-inch	900 LF	Near Jamacha Rd and Donahue Dr	1,275	--	$1,150,000
CIP #5	15-inch	1,235 LF	Along Ivanhoe Ranch Rd U?S of Cottonwood Pump Station	1,275	--	$1,570,000
Total					**$8,527,000**	**$2,720,000**

Note:
1. January 2012 Costs (ENR CCI = 9176). Includes 30% for engineering and administration, 10% for contractor bonding and insurance, and 30% for project contingencies.

4.0 RECYCLED WATER SUPPLY ANALYSIS

For over 30 years, the District's Board has pursued a recycled water program based on the fundamental belief that, by developing and utilizing recycled water, the need for imported water use within the District can be reduced. Section 26 of the District's Code of Ordinances states that "reclaimed water shall be used within the jurisdiction wherever its use is financially and technically feasible, and consistent with legal requirements, preservation of public health, safety and welfare, and the environment." This policy provides the District the opportunity to plan, fund, and construct facilities to meet projected recycled water market demands. The uncertainty of water supply in San Diego County and the recent drought conditions make recycled water a viable and critical reliable supply to meet future growth needs. This chapter presents an analysis of projected recycled water demands and recycled water supplies.

4.1 Recycled Water Distribution Facilities

The District operates and maintains over 77 miles of recycled water transmission and distribution pipelines, pump stations, and reservoirs and currently serves recycled water customers primarily within its Central Area System, south of the Sweetwater Reservoir and west of the Otay Lakes Reservoirs.

The District's Central Area continues to grow and is characterized by large master-planned developments. The District will continue to require developers to connect to the recycled water system to serve irrigation demands. Otay Mesa is also a growing part of the District with significant planned industrial development. Anticipating that a recycled water supply will become available, developers in Otay Mesa have also been constructing dual distribution pipelines for over twenty years. The District will continue to construct reservoirs, pump stations, and transmission mains that will incorporate these distribution pipelines into a complete delivery system.

4.2 Existing Recycled Water Supplies

The District currently has two sources of recycled water supply: recycled water produced locally at the RWCWRF and, through an agreement with the City of San Diego, recycled water produced at the City of San Diego's SBWRP.

4.2.1 Recycled Water from the RWCWRF

The RWCWRF was originally constructed in 1979 and was upgraded in 1990 to its current rated design capacity of 1.3 MGD. At the design flow, the RWCWRF has recently produced an average of 1.0 MGD of recycled water. However, on a peak demand day, the RWCWRF has been operated to produce a supply of 1.2 MGD. In 2011, the RWCWRF provided a recycled water supply of 1,077 acre-feet (AF) to the District.

The RWCWRF provides tertiary treatment that meets the State of California's Title 22 requirements for reuse. The recycled water is pumped to two lined and covered reservoirs 3.4 miles south of the RWCWRF. The recycled water pump station at the RWCWRF consists of 5 pumps with a total capacity of 3,500 gpm (5 MGD) and a firm capacity (with the largest pump out of service) of 2,600 gpm (3.7 MGD). The 14-inch diameter force main to the reservoirs serves as a vessel to fulfill the Title 22 requirement of 450 milligram-minutes per liter of chlorine contact time before the recycled water can be used.

4.2.2 Recycled Water from the SBWRP

In order to serve existing demand for recycled water without supplementing with potable water, the District entered into an agreement to purchase recycled water from the City of San Diego's SBWRP in October, 2003. The SBWRP has a rated capacity of 15 MGD and is located at Monument and Dairy Mart Roads near the international border with Mexico. The SBWRP receives wastewater from a pump station that scalps flow from the Metro System interceptor that conveys flow northward to the Point Loma WWTP for treatment and ocean outfall disposal. The agreement entitles the District to purchase up to a maximum amount of 6 MGD of recycled water at any time. The term of the agreement is 20 years from January 1, 2007. The agreement establishes annual contract amounts that the District must pay for, even if it cannot take all the recycled water. In 2011, the District purchased 2,803 AF of recycled water from the SBWRP compared to that year's annual required take amount of 4,044 AF. The District pays a commodity rate of $350 per AF for the recycled water supply. The commodity rate is subject to escalation at the same rate adopted by the City Council for its other reclaimed water customers. In 2011, the commodity rate remained at $350 per AF.

The agreement stipulates that the City will meet all applicable federal, state and local health and water quality requirements for recycled water produced at the SBWRP to

the point of delivery. Also, as part of the agreement, in 2007 the District completed construction of a 30-inch transmission main to deliver the recycled water from the point of delivery to the District service area. The City retains 1 MGD of capacity in this transmission pipeline that runs through the City's system. The recycled water pump station at the SBWRP has two 3,500 gpm pumps with a total capacity of 7,000 gpm (10 MGD).

The actual availability of recycled water from the SBWRP has recently been about 5.3 MGD due to wastewater availability, other large demands taking priority, etc. The District and other water agencies are pushing the City of San Diego to complete projects that will direct more wastewater flows to the SBWRP and increase supply reliability. The City has a new capital improvement program that will start addressing these issues over the next couple of years. Thus, the supply from the SBWRP will be about 5.3 MGD until 2015 whereby it will increase to the agreement's 6 MGD.

4.3 Existing and Projected Recycled Water Usage

The District currently provides recycled water service to 684 customers who used approximately 3,880 AF of recycled water in 2011. Current recycled water uses include commercial landscape irrigation, golf course irrigation, and irrigation of public areas such as parks, streetscapes, schools, highway medians, and open space areas. The Olympic Training Center facility in Chula Vista also uses recycled water to irrigate practice fields and common areas.

The District is committed to expanding the recycled water system in order to further reduce future dependence on imported water. Areas with the greatest potential for expansion include the existing Central and Otay Mesa areas, discussed previously, and the North District area. The District plans to maximize the use of recycled water in these areas by converting large potable irrigation users to recycled water and continuing to require new developments within the District to use recycled water, wherever feasible. The District estimated future recycled water demands based on known sub-area master plan and general plan land uses and applying irrigated area percentages and recycled water irrigation duty factors. Table 4-1 provides a summary of the District's actual 2010 recycled water usage and projected recycled water demands through 2035.

Table 4-1. Projected Recycled Water Demands[1]

	Year					
	2010	2015	2020	2025	2030	2035
Demand (AFY)[2]	4,074	4,400	5,000	5,800	6,800	8,000

Notes:
1. Source, Otay Water District 2010 Urban Water Management Plan (adopted June 1, 2011).
2. Acre-feet per year (AFY)

4.4 Comparison of Recycled Water Demands and Existing Supplies

The current effective capacity of the RWCWRF is 1.0 MGD, or 1,120 AFY. The maximum supply from the SBWRP is currently 5.3 MGD (5,940 AFY) and will increase to 6 MGD, or 6,720 AFY in 2015. Thus, the two existing recycled supply sources could provide up to 7,060 AFY currently and up to 7,840 AFY after 2015. These supplies could meet the projected annual average demand through 2030. However, because the supply from the SBWRP is limited to the agreement amounts at any time, there may be supply deficits on a monthly basis and almost certainly on peak demand days. Table 4-2 provides a summary of projected monthly recycled water demands based on historical District seasonal and peak recycled water demand patterns reported in the Otay Water District Water Resources Master Plan Update (revised November 2010). The existing combined monthly recycled water supply from the RWCWRF and the SBWRP is 588 AF (7,060 AF/12 months). This amount will increase to 653 AF (7,840 AF / 12 months) after 2015. Thus, on a monthly basis, the District will begin seeing deficits by 2020 during the peak demand months. The peak month deficits are projected to grow from approximately 670 AF in 2020 during the two peak demand months, to 1,100 AF during the two peak demand months in 2035. In addition, the deficits are expected to occur for over half the year by 2035.

Table 4-2. Projected Monthly Recycled Water Demands

Month	Demand (% of Ann. Ave.)[1]	Projected Recycled Water Demand (AF)					
		2010	2015	2020	2025	2030	2035
Jan	3.50%	143	154	175	203	238	280
Feb	3.50%	143	154	175	203	238	280
Mar	2.33%	95	103	117	135	159	187
Apr	4.92%	200	216	246	285	334	393
May	7.67%	312	337	383	445	521	613
Jun	11.17%	455	491	558	648	759	893
Jul	12.00%	489	528	600	696	816	960
Aug	13.17%	536	579	658[3]	764	895	1,053
Sep	13.42%	547	590	671	778	912	1,073
Oct	10.75%	438	473	538	624	731	860
Nov	9.25%	377	407	463	537	629	740
Dec	8.33%	340	367	417	483	567	667
Ann. Ave.[2]	**100.00%**	**4,074**	**4,400**	**5,000**	**5,800**	**6,800**	**8,000**

Notes:
1. Source: 2010 Water Resources Master Plan Update (revised November 2010).
2. Source: 2010 Urban Water Management Plan (adopted June 1, 2011).
3. Highlighted numbers indicate months where demand will exceed the available supply of 668 AF.

Table 4-3 summarizes the projected peak day recycled water demand versus existing supply, based also on peak day demand usage reported in the 2010 Water Resources Master Plan Update. The District is already seeing deficits in meeting peak day recycled water demands and has had to supplement with potable water. The 2010 peak day deficit of 1.0 MGD is projected to increase to 7.3 MGD in 2035. The projected monthly and peak day recycled water supply deficits would have to be supplied from alternative sources. Potential additional recycled water supplies are discussed in the next section.

Table 4-3. Projected Peak Day Recycled Water Demands vs. Existing Supply

Demand/Supply	Projected Recycled Water Demand					
	2010	2015	2020	2025	2030	2035
Ann. Ave. Demand (AFY)[1]	4,074	4,400	5,000	5,800	6,800	8,000
Ann. Ave. Demand (MGD)	3.64	3.93	4.46	5.18	6.07	7.14
Peak Day Demand (MGD)[2]	7.3	7.9	8.9	10.4	12.1	14.3
RCWRF Supply (MGD)[3]	1.0	1.0	1.0	1.0	1.0	1.0
SBWRP Maximum Supply (MGD)	5.3	6.0	6.0	6.0	6.0	6.0
Total Existing Supply (MGD)	6.3	7.0	7.0	7.0	7.0	7.0
Surplus/(Deficit) (MGD)	**(1.0)**	**(0.9)**	**(1.9)**	**(3.4)**	**(5.1)**	**(7.3)**

Notes:
1. Source: 2010 Urban Water Management Plan (adopted June 1, 2011).
2. Source: 2010 Water Resources Master Plan Update (revised November 2010). Peak day to annual average demand factor = 2.0.
3. Effective treatment capacity.

4.5 Potential Additional Recycled Water Supply Options

Previous planning efforts have identified additional recycled water supplies that may be available to supplement existing and future District supplies. A brief summary of these potential sources is presented below based on details provided in the Otay Water District Integrated Water Resources Plan (March 2, 2007), the Otay Water District 2010 Urban Water Management Plan (adopted June 1, 2011), and the Otay Water District Water Resources Master Plan Update (revised November 2010). The potential additional supplies could come from the following sources:

- Expansion of the RWCWRF
- Additional purchases from the City of San Diego SBWRP
- Partnership with the City of Chula Vista on a regional WRF
- A new joint WRF with San Diego County

An additional option was identified early in the project that involved a new supply from the International Boundary and Water Commission (IBWC) South Bay International Wastewater Treatment Plant. This option would involve providing additional advanced treatment facilities at the international plant as well as multiple international treaties and agreements that would have to be implemented. It was determined that this option had too many uncertainties compared to the other options and was not included in this Wastewater Management Plan. Appendix A provides a planning level study of additional advanced treatment at the IBWC plant.

4.5.1 Expansion of the RWCWRF

This option involves an expansion of the production capacity of the RWCWRF in order to produce additional recycled water. The District indicated that this option could include expanding the RWCWRF in 1.3 MGD increments up to an ultimate capacity of 3.9 MGD. The wastewater flow projections presented in Chapter 2.0 indicated that the current wastewater flows from the District's service area are approximately 1.84 MGD, which would increase to approximately 2.15 MGD by 2030. Flow from the entire Jamacha Basin is currently approximately 2.48 MGD, including customers not currently connected to the sewer system, and is projected to increase to approximately 2.96 MGD in 2030. Thus, an expansion to 3.9 MGD would be a long-term option unless additional wastewater flows could be transferred into the Jamacha Basin. Evaluation of transferring such wastewater flows is not within the scope of this project. However, the evaluations will consider an expansion of the RWCWRF to an ultimate capacity of 3.9 MGD. The costs for transferring wastewater into the Jamacha Basin are not included in the evaluations, nor are the potential increased flow impacts on the existing wastewater collection system. There exists a cost-sharing agreement from 1998 that allocates capital and operating costs between the District and San Diego County. Allocated costs are typically based on proportionate flow discharged by the two service areas.

The total recycled water supply under the RWCWRF expansion options would be up to 2,600 AFY for an expansion to 2.6 MGD and 3,900 AFY for an expansion to 3.9 MGD, based on a 90 percent production efficiency. Any additional sewer flows beyond the RWCWRF treatment capacities would be bypassed to the Metro System facilities.

The infrastructure required for this option would include expansion of plant facilities, including addition of a dedicated chlorine contact basin to achieve the Title 22 contact time requirements before reuse that is currently provided in the 14-inch recycled water pipeline. The flow velocity in a 14-inch steel pipeline flowing at 3,500 gpm (the current capacity of the recycled water pump station) is approximately 7.5 feet per second (fps). The flow velocity at the RWCWRF capacity of 3.9 MGD (2,730 gpm) is approximately 5.5 fps. Assuming continued structural integrity of the 14-inch pipeline over an assumed pipeline life of 50 years, the range of velocities at the proposed RWCWRF expansions of 2.6 and 3.9 MGD should be acceptable operationally. New infrastructure could also include sludge treatment and disposal facilities located at the plant. The total cost for this option would include capital costs for all new infrastructure and the additional operations and maintenance (O&M) costs associated with the additional yield of recycled water supply.

4.5.2 Additional Purchases from the SBWRP

Under this option, the District could currently acquire an additional supply of up to 4 mgd (4,500 AFY) of SBWRP recycled water (for a total of 10 MGD). The City of San Diego is providing the District with transmission capacity in a 30-inch transmission system to deliver recycled water from the point of delivery to the District service area which is 4,100 feet from the SBWRP. The capacity of this transmission system to accept the additional flows would have to be verified. The District is responsible for the construction of conveyance infrastructure from the City's pipeline to the District's 450 Zone Reservoirs. The capacity of this conveyance structure to accept the additional flows would also have to be verified. No other infrastructure would be required for the additional purchase of recycled water from SBWRP. Annual purchase and operation costs would also exist, which would most likely be equivalent to costs incurred for the existing agreement on a per unit basis.

This option would require coordination with the City of San Diego to amend the current agreement allowing the additional purchases.

4.5.3 Partnership with City Of Chula Vista

This option involves a partnership whereby a new proposed WRF would be owned by the City of Chula Vista, and the District would only purchase recycled water but not be responsible for the construction or operation of the treatment plant. Recycled water from this plant would be delivered to serve the District's Central Area System recycled water demands.

The City of Chula Vista and the District completed a study in 2012 (Acquisition of Additional Wastewater Capacity Project, Final Report, April 2012) that, in addition to comparing the purchase of additional wastewater treatment capacity in the Metro System for Chula Vista purposes, investigated the potential partnership to provide an additional supply of Title 22 recycled water to the District. The City of San Diego received its third modified permit, or waiver, for the Point Loma WWTP in June 2010 from the California Coastal Commission for meeting federal standards for secondary treatment of sewage, extending the permit for ocean disposal of advanced primary treated wastewater until 2015. The permit will be reevaluated in 2015 by the Coastal Commission, and it is uncertain whether an upgrade to secondary treatment will be required at that time. The costs of purchasing capacity in the Metro System will substantially increase should an upgrade to full secondary treatment at the Point Loma WWTP be required.

The basic concepts for the potential District/Chula Vista partnership included the following:

- The majority of recycled water produced by the Chula Vista plant can be used by the District; however, the District would have to make the Chula Vista recycled water a second priority behind RWCWRF recycled water and before recycled water purchased from the SBWRP. It is anticipated that the District could take most of the recycled water produced during the peak summer demand months but would take essentially no water during low demand months. Thus, Chula Vista would have to make arrangements for disposal of unused recycled water, most likely through an agreement with the IBWC, to use their ocean outfall for the South Bay International Wastewater Treatment Plant.
- The RWCWRF would continue to produce recycled water at current levels a minimum of 8 months of the year for the duration of the study period (i.e., no expansions).
- Recycled water would be sold to the District at a rate of $350 per AF.
- The Chula Vista plant would be built in three phases of 2 MGD increments: 2 MGD, 4 MGD, and 6 MGD to match Chula Vista population and growth.
- The plant would utilize modern technologies, such as a membrane bioreactor (MBR), to provide a high level of treatment efficiency on a small site.
- The preferred site for the MBR plant is near the Salt Creek Interceptor between I-805 and I-5 in the southwestern portion of the District's water service area, about 3 miles north of the SBWRP.

Infrastructure required for this option would include a pump station and a transmission pipeline to convey recycled water from the Chula Vista plant to the District's Central Area System. This option would also require coordination with the City of Chula Vista, the City of San Diego, and the County of San Diego.

The decision to build a new regional plant versus continuing to discharge wastewater to the Metro System will depend on whether the Metro System Point Loma WWTP will need to be upgraded to secondary treatment, a decision that will be reevaluated in 2015. Chula Vista anticipates needing additional wastewater treatment capacity within the next 14 to 19 years, but with the looming Point Loma WWTP decision and with permitting, design and construction anticipated to take 5 to 10 years, the City will have to make a decision regarding project implementation soon.

4.5.4 Joint WRF with San Diego County

The District and County have conducted previous studies related to joint water reclamation facilities (Metcalf & Eddy, 1997). The efforts have identified a preferred location near the I-805 and the Sweetwater River. This location is downstream of the RWCWRF, which would allow collection of additional wastewater flows. The proposed capacity of the joint District/County facility is 10 MGD. There are many uncertainties and concerns associated with the preferred location, such as the ability to obtain a discharge permit to the Sweetwater River. This option has not been studied further, thus, at the direction of the District, the evaluations herein, including treatment facility concepts and costs, are assumed to be similar to the Chula Vista option.

5.0 ANALYSIS OF WASTEWATER MANAGEMENT OPTIONS

This chapter summarizes the analysis of potential future wastewater treatment, disposal, and reuse options for the District by comparing capital and operational costs over the 20-year planning horizon to 2030. The objective of the comparison is to recommend a wastewater treatment, disposal, and recycling plan to the District based on updated planning and cost estimates for local and regional wastewater management elements potentially affecting future costs to the District wastewater and recycled water customers. Appendix D provides detailed discussion and cost estimates for the wastewater management options.

5.1 Identification of Wastewater Management Options

Wastewater management options were identified, reviewed and discussed in multiple workshops with District staff. From these discussions, wastewater management options were defined and synthesized into five major feasible alternatives involving wastewater treatment, disposal, and reclamation. The five wastewater management options selected for evaluation are listed below:

- Option A: Maintain RWCWRF at 1.3 MGD
- Option B: Expand RWCWRF to 2.6 MGD
- Option C: Expand RWCWRF to 3.9 MGD
- Option D: Abandon RWCWRF and Utilize Metro
- Option E: Abandon RWCWRF and Utilize New Joint District/County WRF

All options presume continued ownership, operation, maintenance, and required expansion of the District's existing wastewater collection system consistent with the wastewater flow projections, hydraulic modeling analyses, and capital improvement projects discussed in Chapter 3 of this report. All options also assume that the required improvements to the Rancho San Diego Pump Station will be implemented. Finally, all options assume that the disinfection facilities at the RWCWRF will be upgraded such that all disinfection contact time and dosage required are achieved at the plant.

Within the wastewater management options, there are also alternatives for wastewater sludge handling (onsite and continued discharge to Metro), sources of reclaimed water (described in Chapter 4), and future Metro wastewater treatment. The Metro wastewater treatment alternatives include 1) continued advanced primary treatment at the Point Loma WWTP and assumed continuance of an existing waiver from the Environmental Protection Agency, and 2) upgrade of the Point Loma WWTP to secondary treatment with attendant costs and allocation of the District's fair share of

the future capital and operating costs. In a recent Recycled Water Study performed for the City of San Diego and released on May 10, 2012, alternatives to the Point Loma Upgrade were evaluated. Alternatives include diversion of wastewater from Point Loma, increased recycled water use, and Indirect Potable Reuse (IPR) using the San Vicente reservoir and Otay Lakes. Multiple alternatives are presented with projected capital and operating costs. The selected IPR alternative could result in a reduction in costs from the secondary upgrade costs allocated to the District for those wastewater management options which include continued discharge to the Metro System. Although it is presumed that San Diego and its participating agencies will select the most cost-effective long-term wastewater and recycled water management solution approvable by EPA, this Wastewater Management Plan uses the assumption of upgrade to secondary treatment for Point Loma.

5.1.1 Option A: Maintain RWCWRF at 1.3 MGD

This wastewater management option maintains the status quo at the RWCWRF, with the exception of water quality enhancements and potential solids handling facilities at the treatment plant location. The capacity of the RWCWRF will remain at the existing 1.3 MGD. All flows conveyed via the District's wastewater collection system in excess of 1.3 MGD will be discharged to the San Diego Metro wastewater collection and treatment system with the associated institutional and financial impacts. The evaluation of Option A includes the following sub-options:

<u>Wastewater Solids Handling</u>

- Onsite treatment at RWCWRF
- Continued discharge to the Metro system

<u>Future San Diego Metro Treatment</u>

- Continued primary treatment
- Upgrade to secondary treatment

<u>Recycled Water Sources</u>

- RWCWRF
- SBWRP
- Chula Vista WRF

Figure 5.1 below depicts the conceptual flow, treatment, wastewater discharge, and recycled water use schematic for Option A. Note that the options for recycled water sources are not indicated on the diagram, but are included in the evaluations.

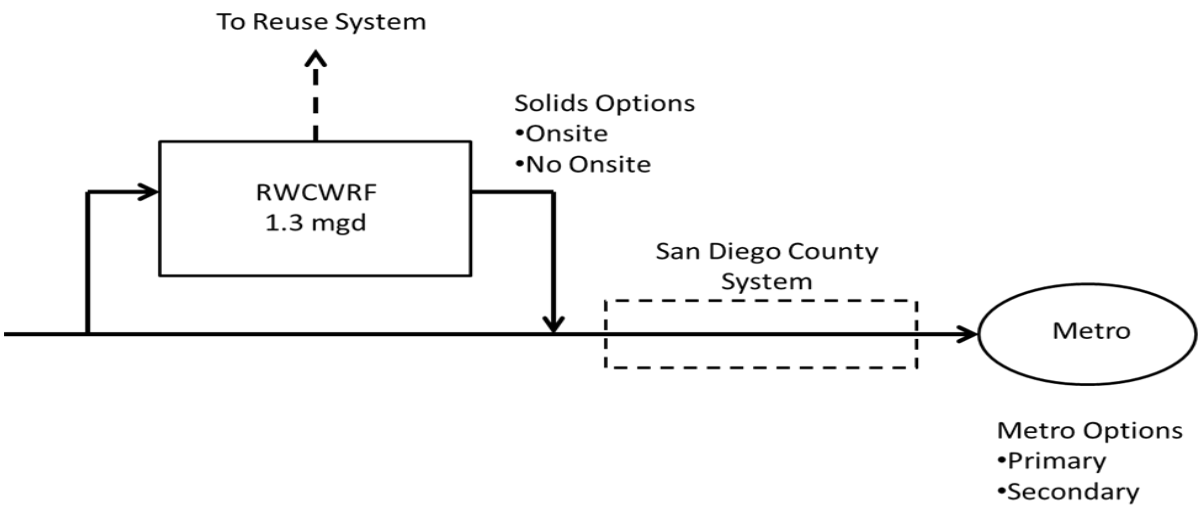

Figure 5.1 Option A: Maintain RWCWRF at 1.3 MGD

5.1.2 Option B: Expand RWCWRF to 2.6 MGD

Option B includes the expansion of the RWCWRF from 1.3 MGD to 2.6 MGD consistent with the flow projections discussed in Chapter 2. Flows in excess of 2.6 MGD will be conveyed to the Metro system. The evaluation of Option B includes the following sub-options:

<u>Wastewater Solids Handling</u>

- Onsite treatment at RWCWRF
- Continued discharge to the Metro system

<u>Future San Diego Metro Treatment</u>

- Continued primary treatment
- Upgrade to secondary treatment

Recycled Water Sources

- RWCWRF
- SBWRP

Purchase of recycled water from a future Chula Vista MBR water reclamation plant is not included in Option B since the engineering feasibility studies for the Chula Vista facility were based on the RWCWRP remaining at its current 1.3 MGD capacity. Figure 5.2 below shows the conceptual wastewater flow and discharge diagram for Option B. Note that the recycled water purchase from SBWRP is not shown, but is included in the evaluations.

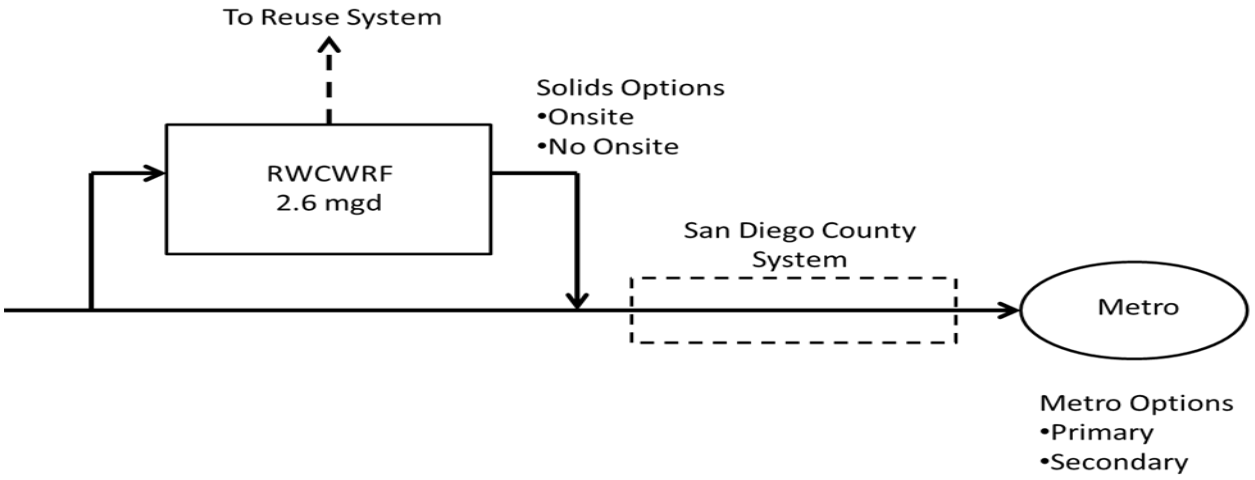

Figure 5.2 Option B: Expand RWCWRF to 2.6 MGD

5.1.3 Option C: Expand RWCWRF to 3.9 MGD

Option C includes the expansion of the RWCWRF from 1.3 MGD to 3.9 MGD. It is recognized that the Jamacha Basin wastewater flow projections developed in Chapter 2 do not indicate the need for a 3.9 MGD treatment capacity at the RWCWRF. However, the District decided to maintain the incremental modularity of the treatment plant capacity and assume an expansion module of 2.6 MGD consistent with Option B. Flows in excess of those treated by RWCWRF will be conveyed to the Metro System. Flows anticipated to be treated by Metro are anticipated to be minimal only, conveyed

at times of RWCWRF plant maintenance or emergency interruptions. The evaluation of Option C includes the following sub-options:

Wastewater Solids Handling

- Onsite treatment at RWCWRF
- Continued discharge to the Metro system

Future San Diego Metro Treatment

- Continued primary treatment
- Upgrade to secondary treatment

Recycled Water Sources

- RWCWRF
- SBWRP

For the same reason as Option B, purchase of recycled water from a future Chula Vista MBR water reclamation plant is not included in Option C. Figure 5.3 below shows the conceptual wastewater flow and discharge diagram for Option C. Note that the recycled water purchase from SBWRP is not shown, but is included in the evaluations.

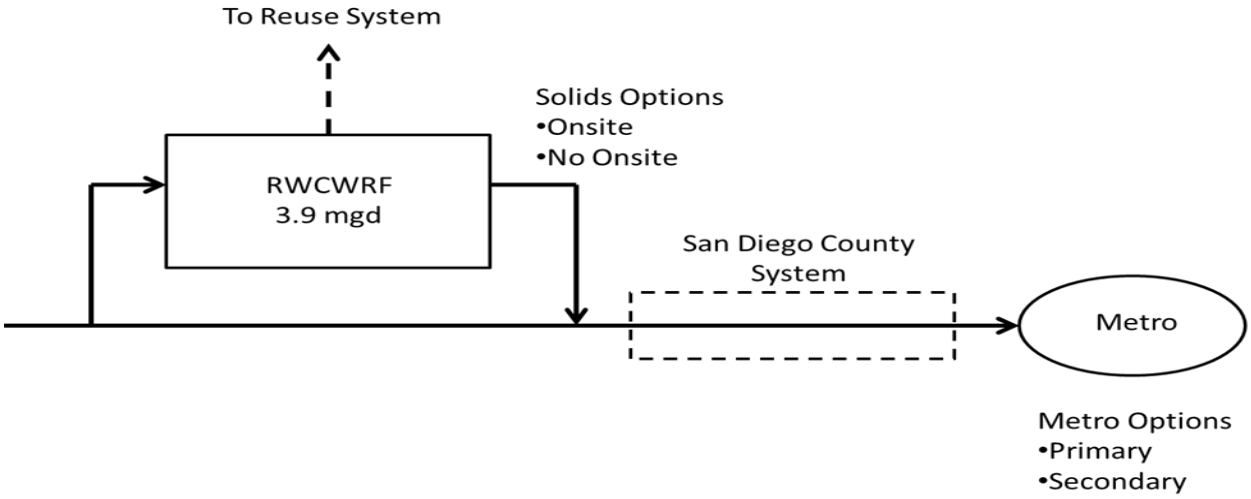

Figure 5.3 Option C: Expand RWCWRF to 3.9 MGD

5.1.4 Option D: Abandon RWCWRF and Utilize Metro

Option D includes the decommissioning and demolition of the RWCWRF. All wastewater collected in the Jamacha Basin will be sent to the Point Loma WWTP through the Rancho San Diego Pump Station. The evaluation of Option D includes the following sub-options:

Future San Diego Metro Treatment

- Continued primary treatment
- Upgrade to secondary treatment

Recycled Water Sources

- SBWRP
- Chula Vista WRF

Figure 5.4 below shows the conceptual wastewater flow and discharge diagram for Option D. Note that the recycled water purchases from the SBWRP and Chula Vista WRF are not shown, but are included in the evaluations.

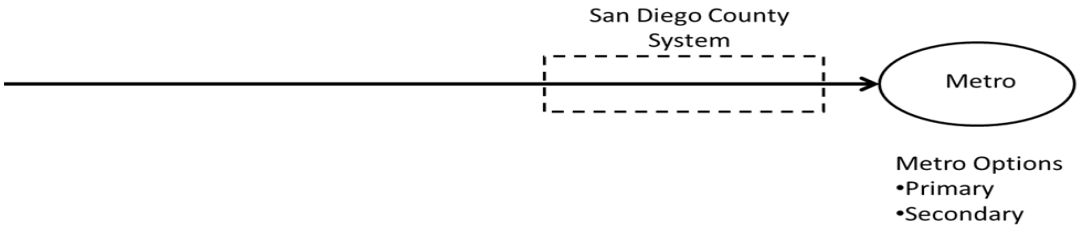

Figure 5.4 Option D: Abandon RWCWRF and Utilize Metro

5.1.5 Option E: Abandon RWCWRF and Utilize New Joint District/County WRF

Option E includes the decommissioning and demolition of the RWCWRF. Wastewater collected in the Jamacha Basin will be sent to a new proposed joint wastewater treatment and recycling facility with San Diego County or the Point Loma WWTP through the Rancho San Diego Pump Station. Collection system modifications and extensions will be required to convey existing flow to the new joint WWTP and to by-

pass to the Metro System, as required. Solids treatment at the new joint plant is assumed, since the plant process is assumed to be the same as the Chula Vista MBR plant. The conceptual joint new WWTP has been described in the 1997 report by Metcalf and Eddy for San Diego County entitled "Water Reclamation Facility Project Feasibility Report". The concept included a 10 MGD plant located near I-805 and the Sweetwater River, using an activated sludge aeration process. This Wastewater Management Plan assumes an MBR plant similar to the Chula Vista proposal with cost estimates the same as the Chula Vista plant for equivalent capacity. The evaluation of Option E includes the following sub-options:

Future San Diego Metro Treatment

- Continued primary treatment
- Upgrade to secondary treatment

Recycled Water Sources

- Joint District/County WRF
- SBWRP

Purchase of recycled water from the Chula Vista WRF is not included in this option, because it is assumed that the new joint WRF will be sized to provide as much recycled water as the Chula Vista WRF would. Figure 5.5 below shows the conceptual wastewater flow and discharge diagram for Option E. Note that the recycled water purchases from the SBWRP and Chula Vista WRF are not shown, but are included in the evaluations.

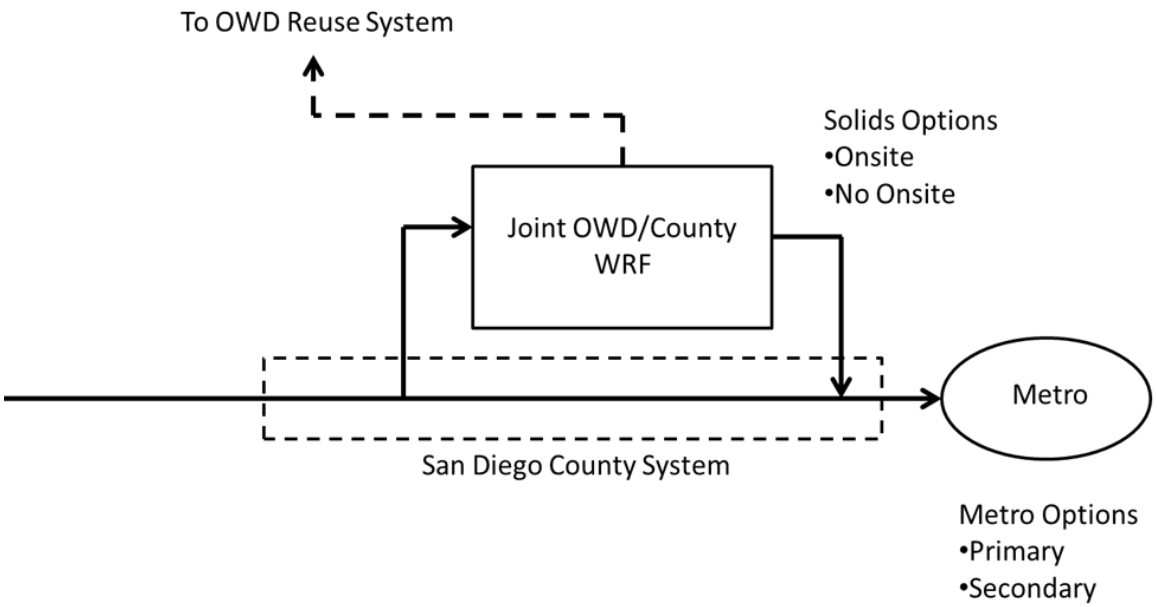

Figure 5.5 Option E: Abandon RWCWRF and Utilize New Joint District/County WRF

5.2 Summary of Cost Components for Wastewater Management Options

The cost components applicable to each wastewater management option included wastewater treatment components and recycled water components. Table 5-1 summarizes the wastewater treatment cost elements applicable to each option.

Table 5-1. Wastewater Treatment Cost Components

	Option				
Cost Component	**A**	**B**	**C**	**D**	**E**
RWCWRF					
Expansion		●	●		
On-Site Solids Handling	●	●	●		
Decommissioning				●	●
Metro System Capacity					
Existing Charge (w/o on-site solids handling)	●	●	●	●	
New Capacity Charge (w/o on-site solids handling)		●	●	●	
Point Loma WWTP Upgrade (w/o on-site solids handling)	●	●	●	●	
New County/Otay WWTP					●

Table 5-2 indicates the recycled water sources which exist for each of the wastewater management options. For facilities other than the RWCWRF, cost elements allocated for recycled water include costs to purchase each unit of recycled water and costs for new booster stations and pipelines to deliver water from the facilities to the District's recycled water distribution system.

Table 5-2. Recycled Water Sources for Wastewater Management Options

Recycled Water Source	Option				
	A	B	C	D	E
RWCWRF	●	●	●		
SBWRP	●	●	●	●	●
New Chula Vista WRF	●			●	
New County/District WWTP					●

In consideration of the key variables for evaluating capital and annual O&M costs for the wastewater management options, sub-options have been identified to compare present worth costs. Sub-options are combinations of wastewater treatment, disposal, and recycled water purchase variables. Table 5-3 presents the matrix of options and sub-options that are evaluated.

Table 5-3. Matrix of Wastewater Management Sub-Options Evaluated

Wastewater Management Option		Recycled Water from SBWRP Only, No Chula Vista Purchases		No SBWRP Purchases, Recycled Water from Chula Vista WRF Only	
		No Point Loma WWTP Upgrade	Point Loma WWTP Upgrade	No Point Loma WWTP Upgrade	Point Loma WWTP Upgrade
A	Onsite sludge	A-2	--	A-1	--
	No onsite sludge	A-6	A-4	A-5	A-3
B	Onsite sludge	B-1	--	--	--
	No onsite sludge	B-3	B-2	--	--
C	Onsite sludge	C-1	--	--	--
	No onsite sludge	C-3	C-2	--	--
D		D-4	D-3	D-2	D-1
E (onsite sludge)		E-2	E-1		

5.3 Cost Estimates for Expansion and Demolition of the RWCWRF

The wastewater management options include expansion or decommissioning of the RWCWRF. Detailed construction cost estimates have been prepared associated with upgrading, expanding, and decommissioning the RWCWRF. Appendix B provides a site map of the RWCWRF with suggested locations for new processes and expansions for Options A, B and C. Appendix C provides a report detailing cost estimates for the RWCWRF expansions and demolition alternatives.

In addition to the assumed expansions, Options B and C include addition of a larger chlorine contact chamber to achieve CA Title 22 requirements for contact time at the plant site. Options A through C also consider potential addition of solids handling facilities. Options D and E include decommissioning of the RWCWRF and restoring the site.

5.3.1 Estimated Construction Costs for RWCWRF Options

A summary of opinions of capital costs for the three options that involve continued use and/or expansion of the RWCWRF is presented in Table 5-4. Table 5-4 includes onsite solids handling costs which are removed when evaluating wastewater management options that do not include onsite solids handling.

5.3.2 Estimated Additional O&M Costs for RWCWRF Options

In addition to capital cost estimates for the RWCWRF components of Options A through C, specific elements of annual O&M costs have been estimated for the three options. Key elements of the operational costs include additional power and chemical costs. Additional power costs were based on a blended rate of $0.12 per KWH. Table 5-5 summarizes the estimated additional O&M costs.

Similar to estimated construction costs, Table 5-5 includes onsite solids handling O&M costs which are removed when evaluating wastewater management options that do not include onsite solids handling.

Table 5-4. Opinions of Construction Costs for RWCWRF Options

Treatment Process	Estimated Construction Costs ($)		
	Option A: Maintain RWCWRF at 1.3 MGD	Option B: Expand RWCWRF to 2.6 MGD	Option C: Expand RWCWRF to 3.9 MGD
Influent Pump Station	0	1,130,000	1,290,000
Headworks & Grit Removal	0	2,040,000	2,200,000
Aeration Basins	0	3,330,000	5,900,000
Secondary Clarifiers	0	1,960,000	3,580,000
RAS/WAS Pump Station	0	820,000	1,490,000
Scum Pump Station	0	173,000	173,000
Effluent Pump Station	0	788,000	1,540,000
Administration Building	0	0	1,040,000
Blower & Electrical Building	0	2,050,000	2,490,000
Aerobic Digestion	1,460,000	2,760,000	3,940,000
Digested Sludge Pump St.	121,000	229,000	331,000
WAS Thickening	848,000	1,580,000	2,310,000
Sludge Dewatering Centrifuge	915,000	915,000	1,750,000
Tertiary Filters (+Flocculation)	0	648,000	1,300,000
NaOCl Storage, Pumping and Chlorine Contact Tank	0	2,010,000	2,200,000
Totals	**$3,350,000**	**$20,500,000**	**$31,500,000**

Table 5-5. Opinions of Additional O&M Costs for RWCWRF Options

Annual O&M Component	Estimated Additional O&M Costs ($/year)		
	Option A: Maintain RWCWRF at 1.3 MGD	Option B: Expand RWCWRF to 2.6 MGD	Option C: Expand RWCWRF to 3.9 MGD
Additional KWHs	468,000	4,850,000	10,600,000
Additional Power Cost	56,200	581,000	1,280,000
DAF Polymer Cost	10,000	19,900	29,900
Solid Dewatering (Polymer) Cost	32,400	64,800	97,200
Sodium Hypochlorite Cost	0	31,000	77,100
Totals	**$98,600**	**$697,000**	**$1,480,000**

5.3.3 Estimated Decommissioning Costs for RWCWRF Options

The report in Appendix C also includes the estimated costs to decommission the RWCWRF and the Steel Bridge Pump Station, which pumps raw wastewater to the RWCWRF. Costs were estimated for decommissioning the plant and pump station, and for demolition of facilities and restoration of the plant site. These costs are associated with wastewater management Option D and Option E. The estimated costs are as follows:

- Decommissioning: $492,000
- Demolition and restoration: $3,460,000
- Total: $3,960,000 (rounded)

5.4 Summary of Wastewater Management Options Cost Evaluations

Based on the wastewater flow projections presented in Chapter 2 and the recycled water use projections presented in Chapter 4, a major objective of this wastewater management plan is to compare projected capital and operating costs for the five wastewater management options to develop a recommended District course of action for the future. The comparative cost approach was estimates of present worth costs, using the sum of capital costs in 2012 dollars and today's value of annual O&M costs from 2015 through 2030 (16 years).

5.4.1 Common Economic Cost Assumptions

A common set of assumptions was developed for all five options. The assumptions include considerations for both wastewater discharge and recycled water purchases. The list of assumptions is presented in Table 5-6. In addition to the assumed cost factors, the projected value of money was assumed to be increasing at 2 percent per year for determining the present worth of operating and maintenance expense.

Table 5-6. Common Economic Cost Assumptions

SBWRF, Chula Vista, Joint Plant Recycled Water Purchase Rate (per AF)[1]	$350
2012 Metro County Wastewater Discharge Rate (per MGD)[2,6]	$3,089,634
Additional Metro Capacity Cost (per MGD)[3]	$30,000,000
PLWWTP Upgrade Capital Cost[4]	$1,161,174,957
Otay WD Capital Cost for PLWWTP Upgrade (0.513%)[4]	$5,956,828
PLWWTP Upgrade O&M Cost[4]	$37,497,060
Otay WD Annual O&M Cost for PLWWTP Upgrade (per MGD)[4]	$156,238
MWD/SDCWA Rebate (per AF)[5]	$385

1. Based on Recycled Purchase Agreement between City of San Diego and Otay WD.
2. Based on Metro Discharge Agreement between City of San Diego and Otay WD.
3. $22 Million paid to Metro, $8 Million paid to the County. A one-time up-front cost for buying capacity in these systems.
4. Point Loma WWTP Secondary Treatment Upgrade Costs at Different Capacities from The City of San Diego's Wastewater Master Plan and Recycled Water Study, May 2012
5. $185/AF is received from MWD; $200/AF comes from the SDCWA.
6. Lump sum of Metro Cost and County cost based on recent District invoices.

5.4.2 Summary of Cost Comparisons for Wastewater Management Options

Appendix D provides the details of the cost evaluation for the wastewater management options. For all options, wastewater discharge costs are based on projected wastewater discharge rates, facilities used, and facility and contract costs through 2030. For all options, recycled water purchase costs are based on projected recycled water needs, production sources, production amounts, and facility and contract costs through 2030. The bases for costs for each of the sub-options summarized in Table 5-3 are evaluated separately as (1) wastewater discharge amounts and costs and (2) recycled water use amounts and costs. Wastewater discharge and recycled water use volumes are indicated for five-year planning horizons from 2010 (actual) through 2030, consistent with District projections indicated previously.

A summary of estimated present worth costs for the wastewater management options is presented in Table 5-7.

Table 5-7. Present Worth Cost Summary for Wastewater Management Options

Wastewater Management Option	Sludge Handling Option	Estimated Present Worth ($ millions)			
		SBWRP Purchases Only, No Chula Vista Purchases		No SBWRP Purchases, Chula Vista Purchases Only	
		No Point Loma WWTP Upgrade	Point Loma WWTP Upgrade	No Point Loma WWTP Upgrade	Point Loma WWTP Upgrade
A	Onsite sludge	$37.1	--	$34.7	--
	No onsite sludge	$79.3	$87.0	$77.0	$84.6
B	Onsite sludge	$82.7	--	--	--
	No onsite sludge	$86.4	$92.8	--	--
C	Onsite sludge	$134.3	--	--	--
	No onsite sludge	$139.8	$146.3	--	--
D	NA	$153.7	$163.0	$156.8	$166.1
E	Onsite Sludge	$148.0	$154.0	--	--

The cost evaluation of wastewater management options results in the following key conclusions:

- The present worth costs for Option A are significantly less for on-site solids handling at RWCWRF due to presumed avoidance of significant discharge to Metro and future Point Loma upgrade costs, or its Metro alternative.
- For Options A, B and C, the lowest present worth costs are for retaining the RWCWRF at 1.3 MGD capacity and not expanding.
- Options D and E are significantly more costly due to increased discharge to Metro, with risks of incurring costs for Point Loma upgrade, and cost of a new joint WWTP in partnership with the County.

6.0 CONCLUSIONS AND RECOMMENDATIONS

6.1 Summary of Conclusions

The work conducted in this Wastewater Management Plan yields the following significant conclusions:

Wastewater Flow Projections

- The total Jamacha Basin wastewater flows from connected and unconnected properties are projected to increase from 2.48 MGD in 2010 to 2.96 MGD in 2030.
- Wastewater flows from the District's service area within the Jamacha Basin, from connected and unconnected properties, are projected to increase from 1.84 MGD in 2010 to 2.15 MGD in 2030
- Wastewater flows from the County's service area within the Jamacha Basin, from connected and unconnected properties, are projected to increase from 0.64 MGD in 2010 to 0.81 MGD in 2030.

Wastewater Collection System

- The existing wastewater collection system has only three areas that do not meet system performance criteria under existing peak wastewater flow conditions. These problem areas should be corrected by replacing the existing undersized sewer pipes.
- One of the existing problem areas is along Campo Road in a section of 10-inch sewer pipe that was, in the past, converted from a forcemain to a gravity pipe. The former forcemain pipe is undersized to act adequately as a gravity pipe. The District would like to replace the entire section of former forcemain pipe with a 15-inch gravity pipe.
- The existing wastewater collection system has only two additional areas that do not meet system performance criteria under 2030 peak flow conditions. The undersized sewer pipes in these areas should also be replaced as funds become available.

Recycled Water Supply and Demand

- The District's existing recycled water supply is an average 1.0 MGD from the RWCWRF and up to 6 MGD annually from the City of San Diego's SBWRP. Due to problems with wastewater supply, other large demands taking priority, etc., the actual peak availability of recycled water from the SBWRP

has recently been only 5.3 MGD. The problems with District recycled water supply are anticipated to be corrected by San Diego by 2015.

- The District projects that its recycled water demand will increase from 4,074 AFY in 2010 to 8,000 AFY in 2035.
- On a monthly basis, the District will begin seeing deficits in recycled water supply by 2020 during the peak demand months. The peak month deficits are projected to grow from approximately 670 AF in 2020 during the two peak demand months, to 1,100 AF during the two peak demand months in 2035. In addition, the deficits are expected to occur for over half the year by 2035. These deficits are not annual and can be mitigated if the District/SBWRP agreement can be amended to allow the District to take its contracted amount at up to two times its annual average rate.
- The District is already seeing supply deficits in meeting peak day recycled water demands and has had to occasionally supplement with potable water. The peak day supply deficit is projected to grow from approximately 1.0 MGD in 2010 to 7.3 MGD in 2035. The deficits can be managed with appropriate recycled water system storage and a modification to the District/SBWRP agreement, as described above.
- Potential additional supplies of recycled water evaluated include the following sources:
    - Expansion of the RWCWRF
    - Additional purchases from the City of San Diego SBWRP
    - Purchase of recycled water from a potential new City of Chula Vista regional WRF
    - A new joint WRF with San Diego County

Future Wastewater and Recycled Water Management Options

- There exist multiple economic, institutional, regulatory, and environmental factors which are currently affecting and will affect the District's future options for treating, reusing, and discharging wastewater generated within the District's limited wastewater service area.
- Wastewater treatment options include the RWCWRF, discharge to the Metro System, and partnership with the County in a conceptual new 10 MGD plant.
- Recycled water supply options include the RWCWRF, the Metro SBWRP, a potential new 6 MGD WRF in Chula Vista, and a potential new joint treatment and reclamation plant in partnership with the County.
- The wastewater management and recycled water options were combined into five overall management options for cost evaluations:
    - Option A – maintain RWCWRF at 1.3 MGD

- Option B – expand RWCWRF to 2.6 MGD
- Option C – expand RWCWRF to 3.9 MGD
- Option D – decommission RWCWRF and send all flow to Metro
- Option E – decommission RWCWRF and build joint plant with County

- The evaluation of RWCWRF options considered onsite solids handling/ sludge management and no onsite sludge management. The joint County plant options considered only onsite sludge management consistent will all previous planning efforts. All options that involved discharge of any flows to the Metro System included consideration of the Metro Point Loma WWTP remaining a primary treatment plant and upgrade to a secondary treatment plant with associated capital and O&M cost impacts to the District.
- A detailed present worth cost evaluation of the five primary management options and many sub-options, that included estimates of capital costs, annual O&M costs, and recycled water purchases through 2030 lead to the following conclusions:

  - Option A (RWCWRF stays at 1.3 MGD) has the lowest present worth costs of the five options, followed by Option B (expand RWCWRF to 2.6 MGD), then Option C (expand RWCWRF to 3.9 MGD). This is due to the existing investment in RWCWRF and the avoidance of Metro discharge costs and additional recycled water purchase costs.
  - Option D (send all flow to Metro System) has the highest present worth cost due to the existing cost structure, potential for upgrade costs associate with Point Loma, and need to purchase additional Metro and County system capacity.
  - The lowest cost sub-options involve onsite solids handling, purchase of recycled water from a Chula Vista WRF, and avoidance of payment for a Metro Point Loma WWTP upgrade.
  - For all RWCWRF expansion options (A, B, and C), construction and operation of onsite solids handling is more cost-effective than no onsite solids handling due to the reduced Metro discharge volumes and costs.
  - Abandonment of RWCWRF and reliance on Metro or a new joint District/County WRF is significantly more costly than retaining RWCWRF at any of the three capacities evaluated. This reinforces the District's value in the existing plant and in its Metro and County system capacity ownership.
  - Purchase of recycled water from a new Chula Vista WRF appears to be more cost-effective than purchase from the SBWRP due to the current take or pay provision in the SBWRP agreement.

6.2 Wastewater Collection System Recommendations

6.2.1 Hydraulic Model

The existing hydraulic model was last calibrated in 2006 and should be recalibrated in the next planning effort. Typically, a hydraulic model is calibrated every 5 years as changes in development occur, or as happened in the current planning effort, several of the modeled system components (pump stations and pipelines) were updated. The District should also consider calibrating the model using predictive hydrologic methods in the next model update. In terms of versatility and range of applications, it far exceeds the capabilities of the peaking factor methodology which is currently utilized.

6.2.2 Recommended Wastewater System Improvements

Table 6-1 summarizes the schedule and capital cost opinions for the recommended wastewater collection system improvements. Figures 3-4 and 3-6 illustrated the recommended improvements. The estimated total capital cost for the recommended infrastructure to correct existing system deficiencies is $8.53 million. To accommodate 2030 wastewater flows, the additional capital cost is approximately $2.72 million.

Table 6-1. Recommended Wastewater Collection System Improvements

Project No.	Description		Location	Unit Cost ($/LF)[1]	Conceptual Cost Opinion ($)	
					Existing	2030
Collection System Pipes						
CIP #1	12-inch	36 LF	Near Fury Ln and Jamacha Rd	1,020	$37,000	--
CIP #2	24-inch	91 LF	Near Hillsdale Rd and Jamacha Rd	2,040	$190,000	--
CIP #3	15-inch	9,225 LF	Along Campo Road from Avocado Rd to Singer Lane	900	$8,300,000	--
CIP #4	15-inch	900 LF	Near Jamacha Rd and Donahue Dr	1,275	--	$1,150,000
CIP #5	15-inch	1,235 LF	Along Ivanhoe Ranch Rd upstream of Cottonwood Pump Station	1,275	--	$1,570,000
Total					**$8,527,000**	**$2,720,000**

Note:
1. January 2012 Costs (ENR CCI = 9176). Includes 30% for engineering and administration, 10% for contractor bonding and insurance, and 30% for project contingencies.

CIP #3 involves replacement of a former 10-inch forcemain that currently acts as a gravity pipe. Portions of the pipe undersized for gravity flow. The District desires to replace the entire stretch of this pipe with a new 15-inch gravity sewer pipe. The alignment is primarily along Campo Road which is a major highway. Figure 6-1 shows conditions along the pipeline alignment. A cursory site inspection revealed the following potential problem areas that should be addressed during preliminary design:

- Intersection of Campo Road and Via Mercado.
- Intersection of Campo Road and Jamacha Boulevard, where Jamacha Boulevard joins Campo Road from the south.
- Intersection of Campo Road and Jamacha Boulevard, where Campo Road turns south.

Figure 6-1. Alignment for CIP #3

6.3 Recommended Wastewater Management and Recycled Water Strategies

From the economic evaluations of the five wastewater (and recycled water) management options, the following are recommended strategies for consideration by the District.

- Retain and maintain the RWCWRF at its current capacity. This recommendation, however, does not preclude a future expansion of RWCWRF capacity if additional reclaimed water for the District cannot be obtained from a new assumed Chula Vista WRF or from the SBWRP.
- If regulatory restrictions prohibit the use of the existing reclaimed water pipeline to achieve required chlorine contact times before expansion of the RWCWRP, then plan, design, and construct a chlorine contact chamber. The estimated capital costs for the chlorine contact chamber is $3,420,000 (includes 30 percent for engineering and administration, 10 percent for contractor bonding and insurance, and 30 percent for project contingencies).
- Plan, design, and construct on-site solids handling facilities on the RWCWRF site for a capacity of 1.3 MGD expandable to 2.6 MGD. The estimated capital costs for the on-site solids handling facilities is $5,690,000 (includes 30 percent for engineering and administration, 10 percent for contractor bonding and insurance, and 30 percent for project contingencies).
- Target the on-site solids handling start-up date as early as possible, but no later than 2015, to avoid potential Point Loma WWTP upgrade costs.
- Confirm that construction and operation of on-site solids handling facilities will preclude significant discharges to the Metro System, except for plant maintenance or emergency events.
- Upon construction of RWCWRF on-site solids handling, re-determine new quality and resulting unit costs for Metro discharges.
- Renegotiate the SBWRP recycled water purchase agreement to allow short-term, peak month and peak-day purchases of recycled water in excess of the 6 MGD limit stated in the contract, preferably to achieve 12 MGD. Also, renegotiate the agreement to remove the take or pay provision.
- If the take or pay provision of the SBWRP agreement cannot be negotiated out, support the future planning, design, permitting, and construction of the Chula Vista WRF and negotiate a contract to take all recycled water produced by the plant.
- Perform a District recycled water storage evaluation to assess daily and peak month water balances to assure that projected peak period recycled water demands can be achieved by the combination of RWCWRF, SBWRP/Chula Vista WRP recycled water purchases with no or little supplementation by other water sources, such as SDCWA water.

6.4 Potential Funding Sources for Wastewater Capital Improvements

This Wastewater Management Plan has recommended capital improvement projects for the District's wastewater collection system and the RWCWRF. There are available options for funding these improvements through internal and external sources having benefits and conditions requiring additional assessment by the District related to each individual project.

6.4.1 Internal Funding Options

Internal funding options include conventional sources familiar to the District. These include wastewater rates and connection fees that would fund debt service on revenue bonds that the District would authorize and sell for specific projects. Since the District typically funds projects in this manner, no more discussion is provided herein.

6.4.2 External Funding Options

External funding for the District's proposed wastewater collection and treatment projects could come from a number of public sources. The following discussion is a summary of those potential sources.

Federal Funding

Federal funding for wastewater projects providing for wastewater reuse in lieu of use of potable supplies has been included in the budget of the U.S. Bureau of Reclamation (Bureau). Title II of the Senate version of the Fiscal Year 2013 (FY2013) Energy and Water Development Appropriations Bill calls for $1B in funding for the Bureau, which is $19.8M less than the FY2012 enacted amount. The House Energy and Water Development Appropriations Bill recommends $967M for the Bureau, which is approximately $81M below the House appropriation in FY2012.

The Water and Related Resources account of Title II supports the development, construction, management, and restoration of water and related natural resources in the 17 western states. The account includes funds for operating and maintaining existing facilities and conducting studies on ways to improve the use of water and related natural resources. Wastewater reuse projects can be potentially funded under the TITLE XVI Water Reclamation and Reuse Program. A Title XVI Water Reclamation and Reuse Program funding opportunity has been previously available through WaterSMART. The Bureau invites sponsors of congressionally authorized Title XVI

projects to request cost-shared funding for the planning, design, or construction of those proposed wastewater reuse projects. This funding opportunity is available by searching funding opportunity number R13SF80002 on *www.grants.gov*.

The Bureau anticipates providing no more than $4M per applicant. This is subject to WaterSMART's future FY2014 appropriations, project funding capability, and the amount remaining under the appropriations ceiling for each authorized project. Approximately 5 to 10 awards are typically made each year.

Through the Title XVI Water Reclamation and Reuse Program, the Bureau provides funding for projects that reclaim and reuse municipal, industrial, domestic or agricultural wastewater and naturally impaired ground or surface waters. Reclaimed water can be used for a variety of purposes, such as environmental restoration, fish and wildlife, groundwater recharge, municipal, domestic, industrial, agricultural, power generation or recreation.

The WaterSMART Program focuses on improving water conservation and sustainability and helping water resource managers make sound decisions about water use. It identifies strategies to ensure that this and future generations will have sufficient supplies of clean water for drinking, economic activities, recreation and ecosystem health. The program also identifies adaptive measures to address climate change and its impact on future water demands. Through WaterSMART and other conservation programs funded over the last three years, more than 580,000 acre-feet of water per year is estimated to have been saved.

State Funding

The last two decades has seen an unprecedented series of bond measures passed by the voters of California to fund water resources development throughout the State, including reclamation projects. Beginning in 1996, voters passed a water-related proposition roughly every four years as highlighted in the following list:

- Proposition 204 – Safe, Clean, Reliable Water Supply Act. (1996)
- Proposition 13 – Safe Drinking Water, Clean Water, Watershed Protection, and Flood Protection Bond Act. (2000)
- Proposition 40 – The California Clean Water, Clean Air, Safe Neighborhood Parks, and Coastal Protection Act of 2002 (2002)
- Proposition 50 – Water Quality, Supply and Safe Drinking Water Projects. Coastal Wetlands Purchase and Protection. Bonds. (2002)

- Proposition 84 – Bonds for clean water, flood control, state and local park improvements, etc. (2006)

The Clean Water State Revolving Loan Fund Program (CWSRF) was established by the Federal Water Pollution Control Act, as amended in 1987. The CWSRF offers low interest financing agreements for water quality improvement projects. Annually, the program disburses between $200 and $300 M to eligible projects. Eligible projects include construction of publicly-owned treatment facilities, such as wastewater treatment, local sewers, sewer interceptors, water reclamation facilities, and storm water treatment. Eligible applicants include and city, town, district, or other public body created under state law and any designated and approved management agency under Section 208 of the Clean Water Act. There exist favorable financing terms, including low interest rate, 20 year repayment, up to $50M per agency per year, and deferred repayment until 1 year after construction is completed.

7.0 LIST OF REFERENCES

Atkins. 2010 Urban Water Management Plan, prepared for Otay Water District, June, 2011.

Brown & Caldwell. San Diego Recycled Water Study, prepared for City of San Diego, May 10, 2012.

CDM. Integrated Water Resources Plan, prepared for Otay Water District, March 2007.

City of San Diego New Regional Wastewater Disposal Agreement, May, 1998.

Final Environmental Assessment, Sycuan Band of the Kumeyaay Nation Fee-to-Trust, August 2011.

Metcalf & Eddy. Spring Valley Sanitation District Water Reclamation Facility Project Feasibility Report, prepared for County of San Diego, May 14, 1997.

Metropolitan Water District, San Diego County Water Authority and Otay Water District LRP Agreement, July, 2005.

NBS Lowry. Wastewater and Recycling Optimization Study, prepared for Otay Water District, November, 1995.

Otay Water District. RWCWRF 2007 Annual Report, January, 2008.

Otay Water District. RWCWRF 2008 Annual Report, February, 2009.

Otay Water District. RWCWRF 2009 Annual Report, February, 2010.

Otay Water District. Sewer System Management Plan Sewer Model Calibration, Capacity Analysis, and System Assessment, February, 2006.

Otay Water District. Sewer System Management Plan, July, 2009.

PBS&J. County of San Diego Sewer System Management Plan, prepared for County of San Diego, June, 2010.

PBS&J. Water Resources Master Plan Update, prepared for Otay Water District, November, 2010.

PBS&J, Rancho San Diego Pump Station Sewer Flow Projection Study, prepared for Spring Valley Sanitation District, April 2010.

Regional Wastewater Disposal Agreement, January, 2000

RMC. Acquisition of Additional Wastewater Capacity Project, Final Report, prepared for City of Chula Vista, April, 2012.

South Bay Water Reclamation Plant Reclaimed Water Purchase Agreement, Oct 2003.

Spring Valley Sanitary District Sewer Agreement, May 1998.

Appendix A

Technical Memorandum: Recycled Water Supply Augmentation Planning Level Study

Technical Memorandum

Date: January 6, 2012

To: Bob Kennedy, Otay Water District

From: Liberato Tortorici, Malcolm Pirnie / ARCADIS
Brent Alspach, Malcolm Pirnie / ARCADIS

Re: Recycled Water Supply Augmentation Planning Level Study

I. Introduction

Malcolm Pirnie / ARCADIS (Malcolm Pirnie) was retained by the Otay Water District (District) to perform a "high altitude level" planning study to evaluate options for augmenting the District's recycled water supply from the City of San Diego's (City) South Bay Water Reclamation Plant (SBWRP) with effluent from the International Boundary and Water Commission (IBWC) South Bay International Wastewater Treatment Plant (SBIWTP). The South Bay recycled water mains, along with the locations of the both the SBWRP and the SBIWTP, are shown in **Figure 1**. The District currently purchases an average of approximately 5.9 MGD of recycled water from the City's SBWRP and distributes that water to recycled water customers within the District's service area. The IBWC's SBIWTP, which is adjacent to the City's SBWRP, was recently upgraded from an advanced primary to a full secondary treatment facility and discharges an average of 25 MGD of secondary effluent to the South Bay Land and Ocean Outfall system. The District is interested in potentially reclaiming secondary effluent from the IBWC's SBIWTP to augment the recycled water supply from the City's SBWRP as described under *Option 1* below or to replace the recycled water supply available from the City's SBWRP as described under *Option 2* below.

II. Focus of Technical Memorandum

The focus of this memorandum is to develop planning level information, including process requirements and estimates of probable capital and total annual costs, for the following recycled water supply options:

Option 1 *– Deliver SBIWTP Secondary Effluent to the City's SBWRP*

Option 2 *– Partial Upgrade of the SBIWTP from Secondary to Tertiary Treatment*

This technical memorandum is intended to provide the District with sufficient "high altitude level" information to determine whether augmenting the District's recycled water supply with effluent from the SBIWTP might be economically viable and whether either or both of the above options merit further development in more detailed study, conceptual design, and/or preliminary design.

Figure 1
South Bay Recycled Water Mains

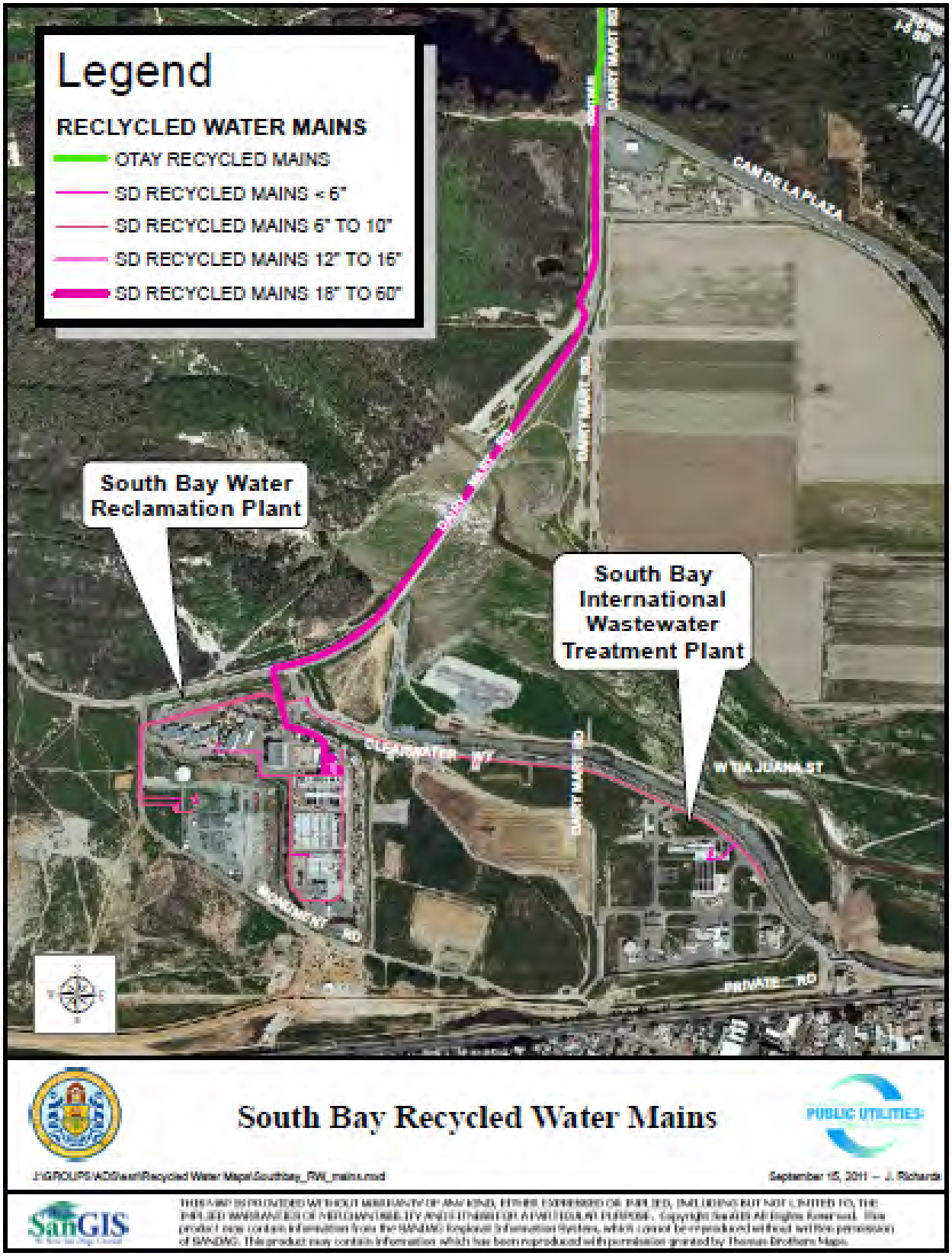

III. Definition of Recycled Water Supply Options

The two options for augmenting recycled water supplies are defined below. The assumptions used for sizing of the required new facilities and for developing estimates of probable costs are included in Appendix A. It should be noted that these assumptions represent Malcolm Pirnie's best estimate of existing facilities and recycled water quality objectives; these assumptions need to be confirmed by the District prior to further developing the concept in a more detailed planning study. Of particular importance in such a planning study will be a detailed review and assessment of priority pollutants and pollutants of concern which might render recycled water from the SBIWTP undesirable for District recycled water end users.

Option 1 *– Deliver SBIWTP Secondary Effluent to the City's SBWRP*

Under this option the following key project components as identified in **Figure 2** would need to be implemented:

- Construct effluent discharge piping from the IBWC's SBIWTP to the City's SBWRP tertiary treatment facilities. These will include a 14" CMLDI pipeline and appurtenant metering and control facilities.

- Utilize the existing tertiary filters, UV disinfection facilities, and recycled pumping facilities on the City's SBWRP site as shown in Figure 2. Note that California Department of Public Health (CDPH) disinfection requirements vary depending on the end use of recycled water; for some uses, disinfection may not be necessary. This analysis conservatively assumes the use of full disinfection via the existing UV disinfection system to allow the District the greatest flexibility for the sale of recycled water to potential customers.

- Construct reverse osmosis (RO) facilities on the City's SBWRP site to reduce the total dissolved solids (TDS) in the recycled water supply. The TDS concentration in the secondary effluent from the SBIWTP averages 1,600 mg/L. This dictates that a portion of the filtered tertiary effluent will be processed through RO, with the desalinated permeate blended with the remainder of the filtered effluent to produce recycled water that would meet the District's TDS goal of 1,000 mg/L. The RO concentrate would be diverted to the existing South Bay Land Outfall and Ocean Outfall for disposal.

- Utilize the existing recycled water conveyance pipeline to deliver recycled water to the District's point of connection at Dairy Mart Road and Camino De La Plaza. The recycled water will continue to be delivered to the District's 450' pressure zone.

These project components and facilities would yield a daily average recycled water production of 12.9 MGD, as limited by the assumed ability of the City's SBWRP tertiary filters to accommodate 15 MGD of feed water. A recovery of 92% is assumed for the existing tertiary filters, yielding a filtrate flow of 13.8 MGD, as shown in Figure 2 (i.e., 3.5 to the RO system and 10.3 MGD directly to UV disinfection).

Figure 2
Option 1 – Deliver SBIWTP Secondary Effluent to the City's SBWRP
Process Schematic

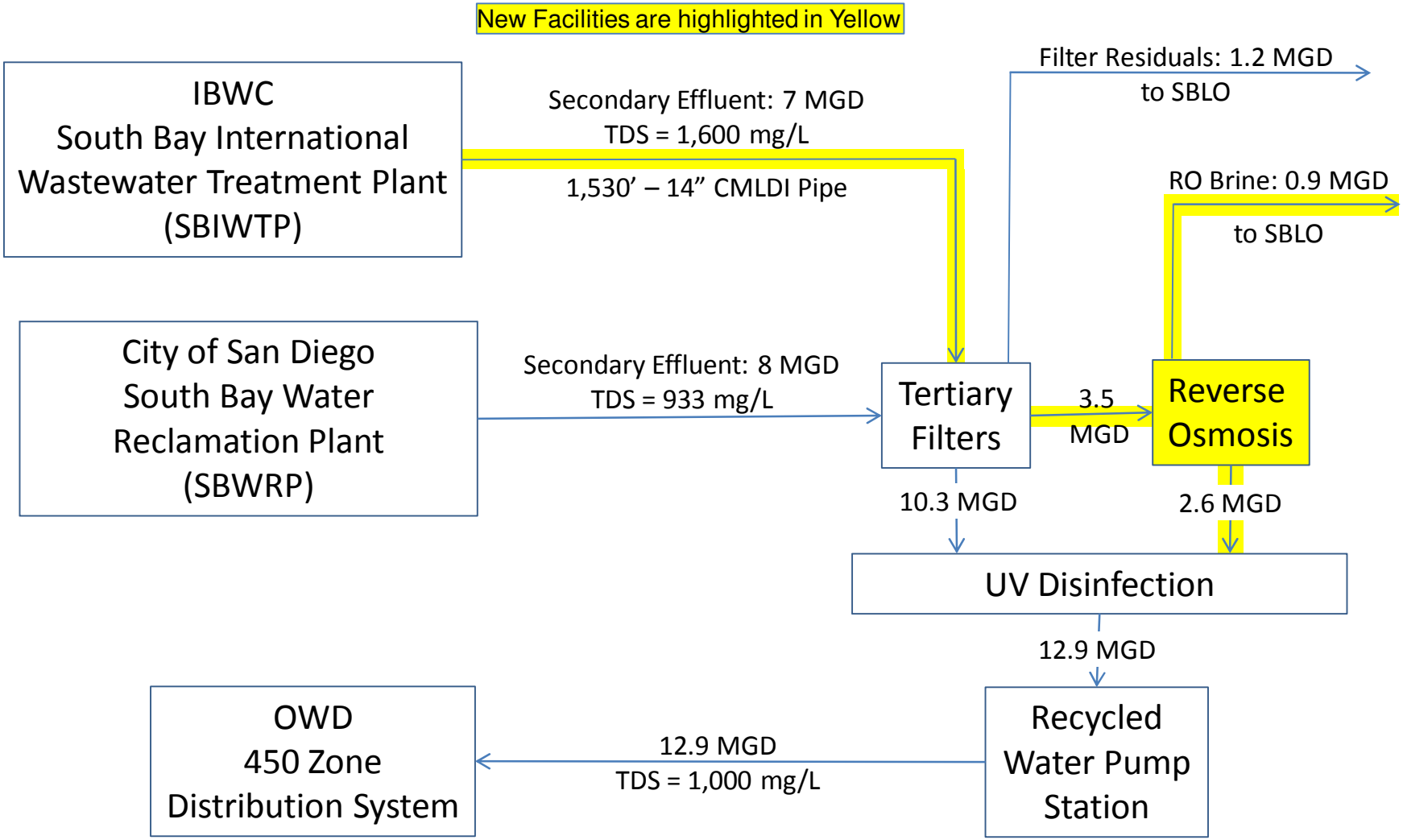

Option 2 *– Partial Upgrade of the SBIWTP from Secondary to Tertiary Treatment*

Under this option the following key project components as identified in **Figure 3** would need to be implemented:

- Construct new tertiary treatment facilities (micro-/ultrafiltration (MF/UF), RO, and UV disinfection) on the SBIWTP site to produce an average recycled water supply of 15 MGD. The TDS concentration in the secondary effluent from the SBIWTP averages 1,600 mg/L. This dictates that a portion of the filtered tertiary effluent will be processed through RO, with the desalinated permeate blended with the remainder of the filtered effluent to produce recycled water that would meet the District's TDS goal of 1,000 mg/L. The RO concentrate would be diverted to the existing South Bay Land Outfall and Ocean Outfall for disposal. As indicated in conjunction with Option 1, CDPH disinfection requirements vary depending on the end use of recycled water; for some uses, disinfection may not be necessary. As with Option 1, this analysis conservatively assumes the use of full disinfection to allow the District the greatest flexibility for the sale of recycled water to potential customers. Although both chemical (e.g., chlorine) or UV disinfection are permitted under CDPH regulations, the use of UV disinfection is increasingly employed in recycled water treatment applications, including the SBWRP and the Orange County Water District's landmark Groundwater Replenishment System. In addition to being chemical-free, UV disinfection avoids the need to construct a tank or basin for chemical disinfectant contact time. As a result, UV disinfection is assumed in this evaluation.

- Construct a new recycled water pump station on the SBIWTP site.

- Construction effluent discharge piping from the SBIWTP to the deliver recycled water to the District's point of connection at Dairy Mart Road and Camino De La Plaza. These will include a 30" CMLDI pipeline and appurtenant metering and control facilities. The recycled water will continue to be delivered to the District's 450' pressure zone.

The daily average recycled water production would be 15.0 MGD. Unlike *Option 1*, the capacity of *Option 2* is not limited by the capacity of existing facilities. Sufficient secondary effluent from the SBIWTP is available to provide the full 15 MGD flow desired by the District.

Figure 3
Option 2 – Partial Upgrade of the SBIWTP from Secondary to Tertiary Treatment
Process Schematic

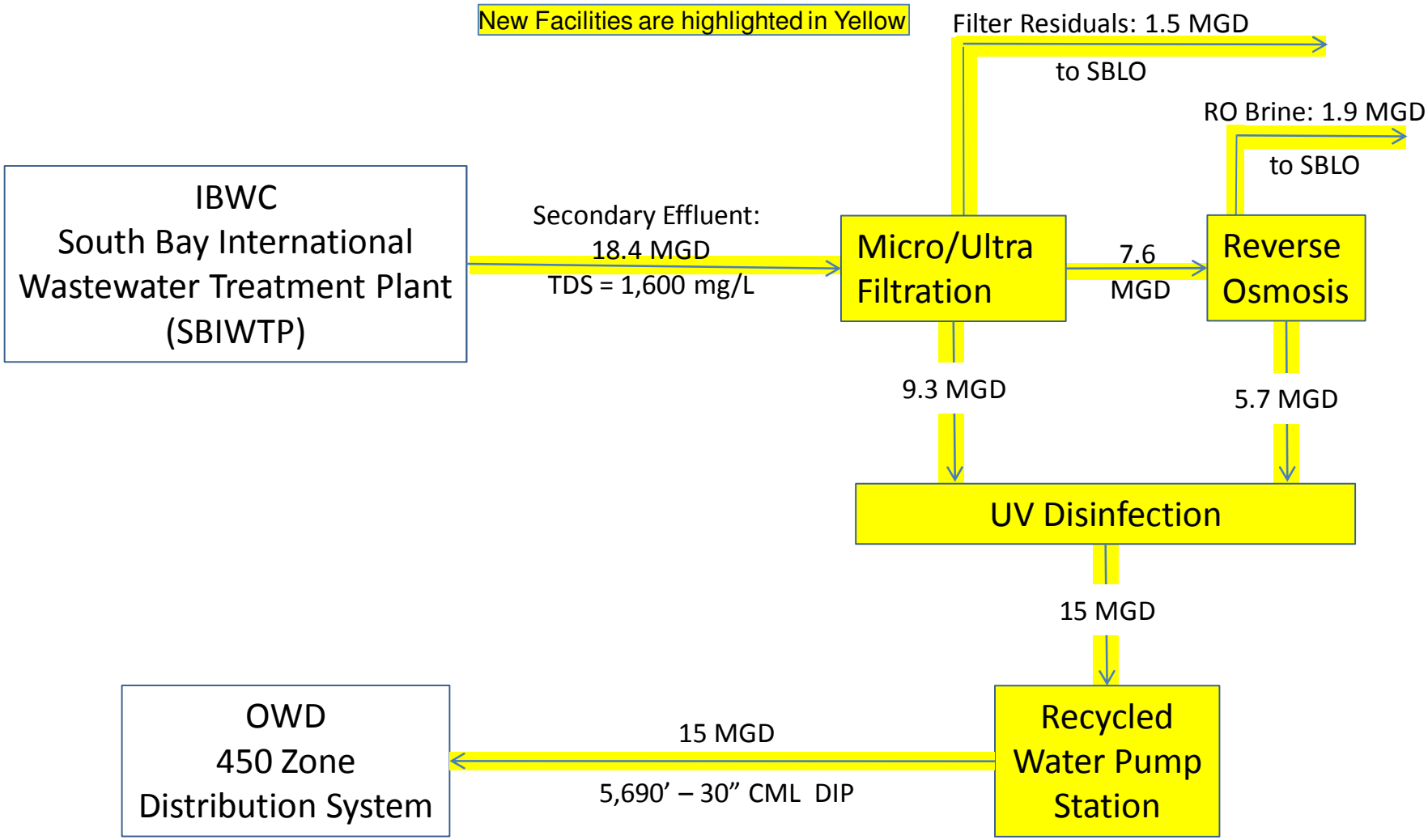

IV. Estimates of Probable Costs

Estimates of probable construction and annual total costs presented in Appendix A and summarized below for this "high altitude level" planning study are consistent with the *Association for Advancement of Cost Engineering (AACE)* Class 5 Order of Magnitude Estimates and are based on October 2011 dollars. However, it should be noted that estimates of probable costs do **not** include the costs for potential upsizing of the SDG&E power supply and/or potential upsizing of in-plant power distribution systems at SBIWTP or at the SBWRP.

Option 1 *– Deliver SBIWTP Secondary Effluent to the City's SBWRP*

Construction costs	$4,048,800
Pre-design costs	$106,300
Engineering costs	$424,900
Post design and CM costs	$531,100
District admin/permitting costs	$212,500
Project contingencies	$318,800
Estimate of probable capital costs**	$5,642,400
Estimate of annual capital costs (amortized)**	$491,500
Estimate of annual O&M costs**	$2,569,400
Estimate of total annual costs**	$3,060,900
Estimate of total recycled water cost**	**$590/acre-foot**

** See Appendix A for a detailed breakdown of costs

Option 2 *– Partial Upgrade of the SBIWTP from Secondary to Tertiary Treatment*

Construction costs	$37,623,500
Pre-design costs	$940,600
Engineering costs	$3,762,400
Post design and CM costs	$4,702,900
District admin/permitting costs	$1,881,200
Project contingencies	$2,821,800
Estimate of probable capital costs**	$51,732,400
Estimate of annual capital costs (amortized)**	$4,505,900
Estimate of annual O&M costs**	$6,177,500
Estimate of total annual costs**	$10,683,400
Estimate of total recycled water cost**	**$670/acre-foot**

** See Appendix "A" for detailed breakdown of costs

The **estimate of total recycled water cost** for *Option 1* represents only the costs for producing an additional 4.9 MGD of recycled water and does **not** include any associated amortized capital costs or operating costs for existing SBWRP treatment facilities upstream of the new facilities identified for *Option 1.* These estimates also do **not** include potential upsizing of SDG&E's power supply and/or upsizing of the in-plant power distribution facilities at the SBWRP. It is Malcolm Pirnie's understanding that the SBWRP is currently served from the same redundant SDG&E 12 kV feeders identified below. The discussion below in the context of Option 2 outlines potential costs to upsize SDG&E power service from 12 kV to 69 kV.

The **estimate of total recycled water cost** for *Option 2* does **not** include any associated amortized capital costs or operating costs for existing SBIWTP treatment facilities upstream of the new facilities identified for *Option 2.* These estimates also do **not** include potential upsizing of SDG&E's power supply and/or upsizing of the in-plant power distribution facilities at the SBIWTP. SDG&E provides power to the SBIWTP via a redundant 12 kV service, which is sufficient for the existing power loads for the current average design flow of 25 MGD. It is Malcolm Pirnie's understanding that this power service will need to be upsized to 69 kV to augment power loads in conjunction with the additional treatment. Based on records from Malcolm Pirnie's previous work with the IBWC, it is believed that a Memorandum of Understanding (MOU) between the IBWC and SDG&E signed in late 1995 establishes that SDG&E would upgrade to a 69 kV services at its expense ($5 million in Year 2000 dollars) when the combined City and IBWC plant loads exceed the capacity of the existing SDG&E 12 kV service. However, Malcolm Pirnie does not have a copy of the MOU and is unable to confirm this agreement.

V. Recommendations

Should the District decide to pursue either or both of the options identified in this Technical Memorandum, the following actions are recommended:

1. Option 1 assumes the use of the existing tertiary media filters at the SBWRP pretreatment prior to the RO system. The use of media filters is **not** an industry standard practice for RO system pretreatment and will need to be further evaluated to determine whether this is feasible or if more standard MF/UF technology is necessary.

2. The RO system is based on lowering TDS concentrations to produce a blended filtrate/RO permeate with a TDS concentration of 1,000 mg/L. Other constituents such as chlorides, sulfates, boron, and/or priority pollutants were not considered in this planning level study. A more detailed review and assessment of these and other constituents will need to be undertaken.

3. Consult the Regional Water Quality Control Board to obtain its preliminary opinion and requirements for the District to pursue disposal of RO concentrate to the ocean through the South Bay Land and Ocean Outfall system.

4. The SBIWTP only treats flows from Mexico, and on occasion there have been upsets at the plant. These upsets are thought to be related to constituents in the influent wastewater flows that are inhibitory to the activated sludge process. Such upsets may continue in the future and thus may impact the ability to produce an uninterrupted recycled water supply from the SBIWTP secondary effluent supply. The District should consider the impact of these potential upsets on the ability to deliver recycle water to its customers. Accordingly, it is recommended that the District conduct a detailed review of historical effluent data for the SBIWTP to assess potential constituents of concern and priority pollutants relative to the District's recycled water quality objectives.

5. Confirm the assumptions contained herein and in Appendix A.

6. Evaluate the ability of the SBWRP and SBIWTP to accommodate the additional power loads that will be required to support the new facilities identified for both options. This will required a detailed review and assessment of the existing motor control centers, power supply facilities, and power distribution facilities.

7. Request a copy of the Memorandum of Understanding signed by the IBWC and SDG&E in late 1995, and evaluate the ability of SDG&E to accommodate the additional power loads that will be required to support the new facilities identified for *Option 1* and Option 2. This will require a detailed listing or current and future power loads and consultation with SDG&E.

8. Consult with the City to obtain its preliminary opinion on both locating additional facilities on the SBWRP site and operating the additional facilities.

9. It is Malcolm Pirnie's understanding that treated water from the SBIWTP belongs to Mexico, which may require compensation in either the form of payments and/or delivery of a portion of the recycled water to Mexico at little or no cost. It is also Malcolm Pirnie's understanding that the cost for operation and maintenance of the existing SBIWTP is shared between the US and Mexico, and that Mexico's contribution towards O&M consists of both an annual payment to the US Section for volume of wastewater treated, as well as full responsibility for hauling and disposal of residual solids generated at the SBIWTP. The District should consult with the IBWC - US Section to obtain its preliminary thoughts on potentially locating and operating additional treatment facilities on the SBIWTP site, as well as on potential agreements and financial arrangements that may be required by the IBWC - US Section and the IBWC - Mexico Section to reclaim and recycle water from wastewater flows that originate in Mexico.

10. Undertake a detailed study and prepare a focused Facility Plan to address the recommendations identified above and to further develop and evaluate the options presented herein.

Appendix A:
Cost Estimates

A.1: Project Assumptions

EFFLUENT QUALITY

1. IBWC SBIWTP secondary effluent TDS = 1,600 mg/L (average for January 2011 through July 2011)
2. City's South Bay Plant tertiary effluent TDS = 933 mg/L (average for 2007, 2008, and 2009). This is not to exceed 1,000 mg/l.
3. Recycled water target TDS = 1,000 mg/L per Bob Kennedy 10/4/11 e-mail
4. Recycled water demand is 15 MGD per 9/22/11 scoping meeting with Bob Kennedy

OPTION 1: Deliver SBIWTP Secondary Effluent to City's South Bay Plant (12.9 MGD Recycled Water Production)

1. Current SBWRP peak reclaimed water production = 8 MGD (peaks for 2007, 2008, 2009)
2. City's SBWRP tertiary treatment and pumping system has firm feed capacity of 15 MGD
3. Deliver 7 MGD of SBIWTP secondary effluent to SBWRP
4. Treat 7 MGD of SBIWTP secondary effluent via SBWRP tertiary filters
5. Recovery of SBWRP tertiary filters is 92%
6. Blended effluent without RO will be as follows: [City's effluent: 8 MGD @ 933 mg/L TDS] + [SBIWTP filtered effluent: 7 MGD @ 1,600 mg/L TDS] = 15 MGD @ 1,244 mg/L
7. RO system: 98% rejection and 75% recovery
8. RO with 98% rejection of TDS and permeate flow of 2.6 MGD yields a blended finished water of 1,000 mg/L TDS
9. Size RO @ 2.6 MGD permeate
10. Combined tertiary filtrate (10.3 MGD) and RO permeate (2.6 MGD) yields 12.9 MGD
11. Utilize existing SBWRP 15 MGD UV facility
12. Size SBIWTP secondary effluent line to City's South Bay Plant for velocity of 10 fps @ 7 MGD.
    - Use 14" CMLDI pipe
    - Per Google maps install 1,530' of pipe from the SBIWTP EDS to the City's tertiary treatment facilities

OPTION 2: Partial Upgrade of the SBIWTP from Secondary to Tertiary Treatment (15.0 MGD Recycled Water Production)

1. Treat 18.4 MGD of SBITWP secondary effluent via MF/UF
2. Target finished recycled water TDS of 1,000 mg/L
3. RO system: 98% TDS rejection and 75% recovery
4. MF/UF system: 92% recovery
5. Blended effluent will be as follows: [SBIWTP MF/UF filtrate: 9.3MGD MF/UF filtrate @ 1,600 mg/L TDS] + [5.7 MGD RO permeate @ 25 mg/L TDS] = 15 MGD @ 1,000 mg/L TDS
6. Size MF/UF @ 16.9 MGD filtrate (9.3 MGD directly to UV and 7.6 MGD to RO), requiring 18.4 MGD feed

7. Size RO @ 5.7 MGD permeate, requiring 7.6 MGD feed
8. Size UV for 15 MGD
9. Size new recycled water pump station for 15 MGD
10. Size SBIWTP recycled water effluent line to District tie-in on Dairy Mart Road and Camino De La Plaza for velocity of 5 fps @ 15 MGD
    - Use 30" CMLDI pipe
    - Per Google maps install 5,690' of pipe from the SBIWTP EDS to the District Tie-in

A.2: Estimates of Probable Construction Costs

COST ASSUMPTIONS

1. Estimates based on October 2011 dollars
2. Power costs based on $0.135 per kWh per IBWC power bills
3. Costs do **not** include potential upsizing of SDG&E power supply and/or in-plant power distribution upsizing

OPTION 1: Deliver SBIWTP Secondary Effluent to City's South Bay Plant (12.9 MGD Recycled Water Production)

1. SBIWTP Secondary Effluent Pipeline to City's South Bay Plant
    - 1,530' of 14" CMDI pipe
    - use $15 per inch-foot installed
    - Installed cost:

1,530' x 14" x $15/inch-foot =	$321,300
Corrosion protection @ 7% =	$23,000
Traffic control @ 7% =	$23,000
Contingencies @ 25% =	$80,400
Conveyance costs	$447,700

2. Reverse Osmosis (RO) @ 2.6 MGD Capacity
    - Assumes 98% TDS rejection and 75% recovery
    - Manufacture installed cost @ $0.74/gpd (Includes: skid frame, pressure vessels, membranes, cartridge filters, valves, pumps, piping, instrumentation, control panel, cleaning equipment, and other associated appurtenances) = $1,924,000

Contractor P&OH @ 15% =	$291,300
Electrical & I&C @ 18% =	$346,300
Contingencies @ 25% =	$481,000
RO costs	$3,042,600

3. Sub - total estimate of probable construction costs	$3,490,300
Contractor Division 1 costs @ 10%	$349,000
Contractor Bonds & Insurance @ 6%	$209,500
Option 1 - total estimate of probable construction costs	**$4,048,800**

OPTION 2: Partial Upgrade of the SBIWTP from Secondary to Tertiary Treatment (15.0 MGD Recycled Water Production)

1. SBIWTP Recycled Water Pipeline to District tie-in on Dairy Mart Road and Camino De La Plaza
   - 5,690′ of 30″ CMDI pipe
   - use $15 per inch-foot installed
   - Installed cost:

5,690′ x 30″ x $15/inch-foot =	$2,560,500
Corrosion protection @ 5% =	$128,000
Traffic control @ 5 % =	$128,000
Contingencies @ 25% =	$640,000
Conveyance costs	$3,456,500

2. New 15 MGD Recycled Water Pump Station
   - Assume wet well similar to SBIWTP NPW PS (36′L x 18′W x 22′D)
   - Concrete quantities

Walls: 2 x (36′L x 22′D x 1.25′T)/27 =	73 cubic yards
Walls: 2 x (18′L x 22′D x 1.25′T)/27 =	37 cubic yards
Slab: 40′L x 22′W x 2′T)/27 =	65 cubic yards
Top: 36′L x 18′W x 1.5′T/27 =	36 cubic yards
Total	211 cubic yards

   - Construction Costs

Concrete: 211 cubic yards @ $900/cy =	$189,900
Contractor P&OH @ 15% =	$28,500
Excavation & Backfill @ 8% =	$15,200
Supplier services @ 4% =	$7,600
Misc metals @ 8% =	$15,200
Electrical & I&C @ 20% =	$38,000
Coatings @ 7 % =	$13,300
Contingencies @ 25% =	$47,500
Structure costs	$355,200

   - Equipment Costs

     Need 6 Fairbanks Morse 6 stage vertical turbine pumps (Model 14F)
     Capacity of each pump is 2,100 GPM @ 507′ TDH (5 operating)
     Use 3 VFD driven pumps and 3 "soft start" constant speed pumps
     Purchase price:

6 pumps @ $162,000 each =	$972,000
3 VDS @ $105,000 each =	$315,000
Purchase price	$1,287,000

Tax & Delivery @ 12.5% =	$160,900
Contractor P&OH @ 15% =	$193,100
Manufacturer services @ 4% =	$51,500
Install @ 10% =	$128,700
Piping & Valves @15% =	$193,000
Surge Protection @ 10% =	$128,700
Electrical & I&C @ 18% =	$231,700
Metering @ 5% =	$64,400
Contingencies @ 25% =	$321,800
Pumping/Piping costs	$2,760,800

3. Microfiltration / Ultrafiltration System @ 16.9 MGD Filtrate Capacity
   - Assumes 92% recovery

Manufacture installed cost @ $0.38/gpd (Includes: pressure vessels, membranes, strainers, valves, pumps, piping, instrumentation, control panel, cleaning equipment, integrity testing equipment, and other assoc. appurtenances) =	$6,440,000
Contractor P&OH @ 15% =	$966,000
Electrical & I&C @ 18% =	$1,159,200
Contingencies @ 25% =	$1,610,000
MF/UF costs	$10,175,200

4. Reverse Osmosis System @ 5.7 MGD Permeate Capacity
   - Assumes 98% TDS rejection and 75% recovery

Manufacturer installed cost @ $0.74/gpd Includes: skid frame, pressure vessels, membranes, cartridge filters, valves, pumps, piping, instrumentation, control panel, cleaning equipment, and other associated appurtenances =	$2,966,000
Contractor P&OH @ 15% =	$444,900
Electrical & I&C @ 18% =	$533,900
Contingencies @ 25% =	$741,500
RO costs	$4,686,300

5. UV Disinfection (UV) @ 15 MGD Capacity
   - Assumes 80 mJ/cm^2 dose and 65% UV transmittance
   - Based on Indianapolis Belmont UV Disinfection Facility

Total construction cost =	$11,000,000

6. Sub - total estimate of probable construction costs = $32,434,000

Contractor Division 1 costs @ 10%	$3,243,400
Contractor bonds and insurance @ 6%	$1,946,100
Option 2 - total estimate of probable construction costs	**$37,623,500**

A.3: Estimates of Probable Capital Costs

COST ASSUMPTIONS

1. Estimates based on October 2011 dollars
2. Pre-design investigations @ 2.5%
3. Engineering costs based on 10% of construction costs
4. Post design and CM costs based on 12.5%
5. District administration and permitting costs based on 5%
6. Project contingencies based on 7.5%

OPTION 1: Deliver SBIWTP Secondary Effluent to City's South Bay Plant (12.9 MGD Recycled Water Production)

Construction costs	$4,048,800
Pre-design costs	$106,300
Engineering costs	$424,900
Post design and CM costs	$531,100
District admin/permitting costs	$212,500
Project contingencies	$318,800
Option 1 – total capital cost estimate	**$5,642,400**

OPTION 2: Partial Upgrade of the SBIWTP from Secondary to Tertiary Treatment (15.0 MGD Recycled Water Production)

Construction costs	$37,623,500
Pre-design costs	$940,600
Engineering costs	$3,762,400
Post design and CM costs	$4,702,900
District admin/permitting costs	$1,881,200
Project contingencies	$2,821,800
Option 2 - total capital cost estimate	**$51,732,400**

A.4: Estimates of Probable Annual Costs

COST ASSUMPTIONS

1. Estimates based on October 2011 dollars
2. Power costs based on $0.135 per kWh per IBWC power bills
3. Annual capital costs based 20 year amortization and 6% interest (CR factor = 0.0871)

OPTION 1: Deliver SBIWTP Secondary Effluent to City's South Bay Plant (12.9 MGD Recycled Water Production)

1. Annual capital costs $5,642,400 x 0.0871 = $491,500/year
2. RO operating costs @ $1.47/kgal) = $1,395,000/year
   Includes: power, labor, chemicals, membrane replacement, maintenance
3. Pumping costs for additional 6.9 MGD beyond the current 6 MGD average flow supplied by the City's SBWRP $852,300/year
   (2,100 HP x 24 hrs/day x 365 days/yr x 0.746 kW/HP x $0.135/kWh x 6.9 MGD/15 MGD)
4. Labor costs $322,100/year
   (1.5 operator x 12 hrs/day x $35/hr x 365 days/yr x 1.40 overhead)
5. Total annual cost estimate = $3,060,900
6. **Cost per acre-foot for 4.9 MGD additional supply = $590/acre-foot**

OPTION 2: Partial Upgrade of the SBIWTP from Secondary to Tertiary Treatment (15.0 MGD Recycled Water Production)

1. Annual capital costs $51,732,400 x 0.0871 = $4,505,900/year
2. MF/UF operating costs @ $0.12/kgal + $740,000/year
   Includes: power, labor, chemicals, membrane replacement, maintenance

3. RO operating costs @ $1.20/kgal) = $2,597,400 / year
   Includes: power, labor, chemicals, membrane replacement, maintenance
4. Pumping costs $1,852,700/year
   (2,100 HP x 24 hrs/day x 365 days/yr x 0.746 kW/HP x $0.135/kWh)
5. Labor costs $572,400/year
   (2 operator x 16 hrs/day x $35/hr x 365 days/yr x 1.40 overhead)
6. UV operating costs @ $415,000/year
7. Total annual cost estimate = $10,683,400/year
8. **Cost per acre-foot for 15 MGD $670/acre-foot**

THIS PAGE INTENTIONALLY LEFT BLANK

Appendix B

RWCWRF Expansion Options Site Layout

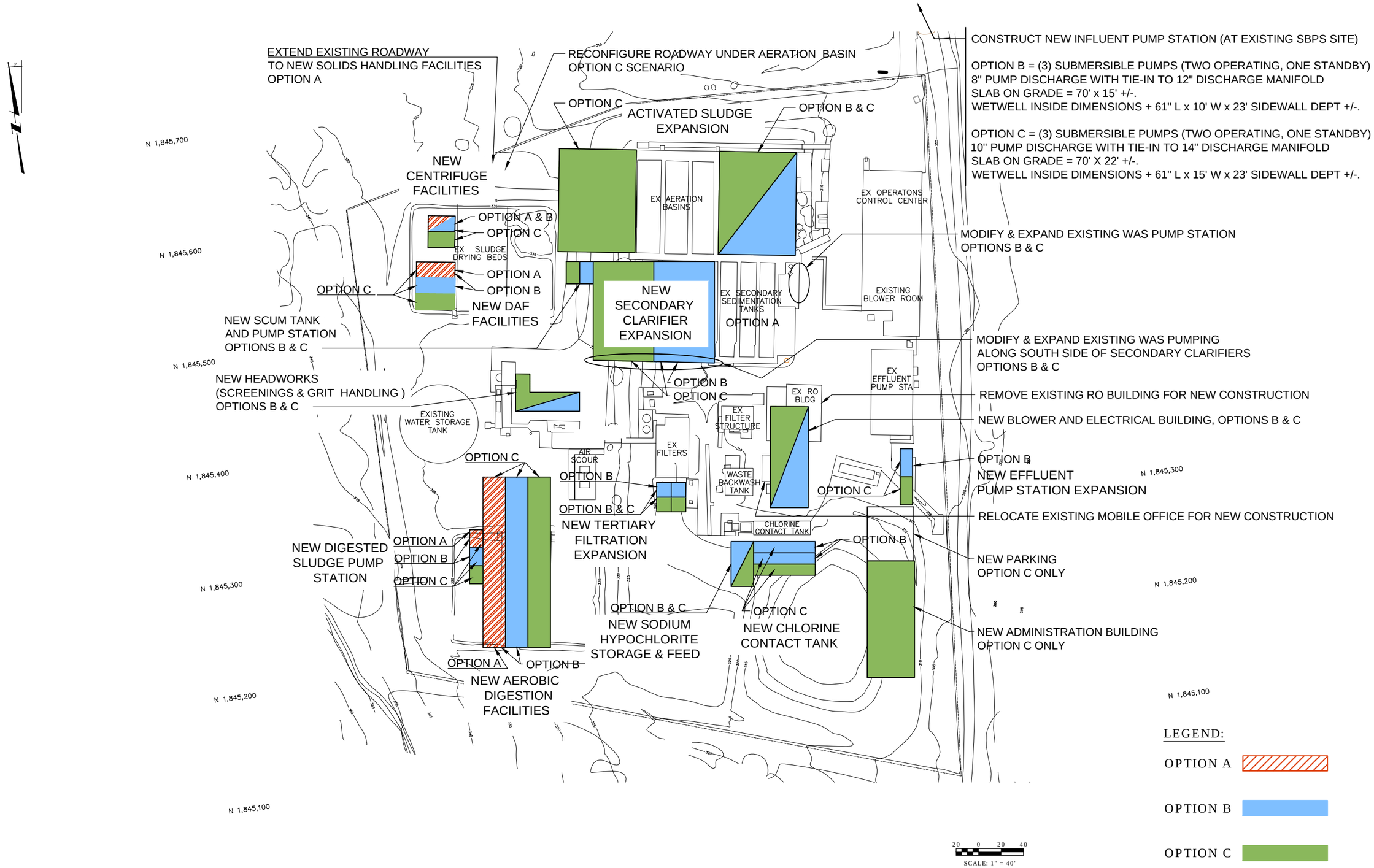

MALCOLM PIRNIE | ARCADIS

The Water Division of ARCADIS

OTAY WATER DISTRICT
2554 SWEETWATER SPRINGS BLVD. SPRING VALLEY CA

WASTEWATER MANAGEMENT PLAN
OTAY CONTRACT NUMBER; S1210-026000

UPGRADE AND EXPANSION OPTIONS
FOR THE RALPH W. CHAPMAN WATER RECLAMATION FACILITY

SCALE: APPROXIMATELY 1" = 40'

ARCADIS U.S., INC.

7/25/2012

XREFS: IMAGES:K:\Symbols\2000\Print\StandardGreenMPI Title Block\Pirnie-AUS.Water.jpg
AutoCAD Xref:PIRNIE STANDARD Title Block\Projects\4984-Otay WRP\4984-OPTION A & C.DWG Scale:1:1 Date:07/24/2012 Time:16:01 Layout:Blank

Appendix C

Technical Memorandum: Summary of Costs Associated with Upgrade, Expansion and Decommissioning of the Ralph W. Chapman Water Reclamation Facility

Technical Memorandum

Date: October 29, 2012

To: Steve Davis; ARCADIS

CC: Libby Tortorici; ARCADIS
Tim Francis; ARCADIS
Ray Fakhoury; KEH & Associates

From: Ken Hume; KEH & Associates

Subject: **Otay Water District RWCWRF Assessment of Capital Cost - Process Upgrades, Expansions and Estimates of Probable Construction Costs for Various Treatment Plant Capacity Options**

The following final technical memorandum is in response to the scope of work identified in our subconsultant agreement dated February 21, 2012, which supports the development of the Otay Water District Wastewater Management Plan. Review comments to the memorandum provided by ARCADIS on September 12, 2012 are addressed herein. Feedback regarding CT criteria for CA Title 22 disinfection as received on October 29, 2012 is also incorporated into this final memorandum. The information is presented in the following three major areas:

- Part A - Estimate Of Conceptual Capital Costs
- Part B - Estimate Of Additional Conceptual Power Consumption Costs
- Part C - Estimate Of Additional Conceptual Chemical Costs

Costs are broken down based on unit processes at the Ralph W. Chapman Water Recycling Facility and the alternatives identified by ARCADIS, which are summarized as follows:

- Option A – Maintain Wastewater Treatment, do not Expand RWCWRF
- Option B – Maintain Wastewater Treatment, Expand RWCWRF To 2.6 MGD
- Option C – Maintain Wastewater Treatment, Expand RWCWRF To 3.9 MGD
- Option D – Eliminate Wastewater Treatment, Abandon RWCWRF

An executive summary provides a review of the results of the assessment discussed above. A description of assessment criteria and cost estimate accuracy is presented in the executive summary.

Thank you for the opportunity to work with your team on this important project for the Otay Water District.

Sincerely,

KEH & Associates, Inc.

Kenneth E. Hume
Principal

KEH & Associates, Inc.
2173 Salk Avenue, Suite 250
Carlsbad, CA 92008
P: 760-579-7650 F: 760-579-7651

TABLE OF CONTENTS

Executive Summary 3

Part A – Estimate of Conceptual Capital Costs 6

1. Influent Pump Station Sizing Criteria and Estimates of Probable Construction Costs for Various Treatment Plant Capacities 6
2. Headworks and Grit Removal Sizing Criteria and Estimates of Probable Construction Costs for Various Treatment Plant Capacities 9
3. Aeration Basin Sizing Criteria and Estimates of Probable Construction Costs for Various Treatment Plant Capacities 12
4. Secondary Clarifiers Sizing Criteria and Estimates of Probable Construction Costs for Various Treatment Plant Capacities 16
5. RAS/WAS Pump Station Sizing Criteria and Estimates of Probable Construction Costs for Various Treatment Plant Capacities 19
6. Aerobic Digestion Sizing Criteria and Estimates of Probable Construction Costs for Various Treatment Plant Capacities 22
7. Digested Sludge Pump Station Sizing Criteria and Estimates of Probable Construction Costs for Various Treatment Plant Capacities 28
8. Scum Pump Station Sizing Criteria and Estimates of Probable Construction Costs for Various Treatment Plant Capacities 32
9. Effluent Pump Station Sizing Criteria and Estimates of Probable Construction Costs for Various Treatment Plant Capacities 33
10. Administration Building Sizing Criteria and Estimates of Probable Construction Costs for Various Treatment Plant Capacities 37
11. Blower and Electrical Building with Standby Power Generation Sizing Criteria and Estimates of Probable Construction Costs for Various Treatment Plant Capacities 40
12. WAS Thickening Sizing Criteria and Estimates of Probable Construction Cost for Various Treatment Plant Capacities 44
13. Sludge Dewatering Centrifuge Sizing Criteria and Estimates of Probable Construction Costs for Various Treatment Options 49
14. Tertiary Filter Sizing Criteria and Estimates of Probable Construction Costs for Various Treatment Plant Capacities 53
15. Chlorine Contact Tank, Sodium Hypochlorite Storage and Chemical Feed facilities for Tertiary Disinfection 55
16. Option D – Decommissioning of RWCWRF and SBPS - Overview 60

Part B – Estimate of Additional Conceptual Power Consumption Costs 63

Part C – Estimate of Additional Conceptual Chemical Consumption 69

Executive Summary

The capital costs presented herein are based on the description of WWMP Options prepared by ARCADIS and titled "Alternatives Fact Sheets". The information presented in this Technical Memorandum is related to the Ralph W. Chapman Water Recycling Facility (RWCWRF) and Steel Bridge Pump Station, as identified under Options A through D of the Alternatives Fact Sheets as developed by ARCADIS. The information presented herein is intended to provide a general basis for management planning of wastewater infrastructure by the District. The memorandum does not include a detailed assessment of existing operations or evaluation of unit process alternatives, which would be considered a pre-design effort and not a part of the scope of this planning level assessment. The unit processes for secondary and tertiary treatment of wastewater consider expansions of existing processes at the RWCWRF, and those considered for solids handling were selected as examples of typical treatment processes employed at municipal wastewater treatment facilities in California.

Capital costs presented are derived according to the methodology presented here. All cost estimates are conceptual, and are expressed in 2012 dollars (Engineering News Record 20-Cities Average Construction Cost Index = 10285.30 Los Angeles May 2012) rounded to the nearest thousand dollars, with no allowance for inflation or financing costs.

Capital cost estimates were prepared to provide comparative order of magnitude costs for new or expanded construction of unit processes considered necessary for the RWCWRF under the options identified in the Wastewater Management Plan. These conceptual estimates, summarized in the table below, were prepared in accordance with the guidelines of the Association for the Advancement of Cost Engineering International (AACEI). According to AACEI, a Class 3 estimate is defined as follows:

“Class 3 estimates are generally prepared to form the basis for budget authorization, appropriation, and/or funding. Class 3 estimates are typically prepared to support full project funding requests, and become the first of the project phase “control estimate” against which all actual costs and resources will be monitored for variations to the budget. They are used as the project budget until replaced by more detailed estimates. In many owner organizations, a Class 3 estimate may be the last estimate required and could well form the only basis for cost/schedule control. Typical level of project definition required: 10% to 40% of full project definition.”

Recognizing the conceptual level of development undertaken to define the alternatives identified herein, it can reasonably be estimated that a 10% to 20% project definition can be assigned to the RWCWRF assessment. Given this level of project definition and using a Class 1 (final engineering) estimate accuracy for municipal wastewater treatment facilities of +5% / -3%, AACEI standards project that a Class 3 estimate would fall within an accuracy range of approximately +25% / - 15%. General contingencies were applied to each unit process estimates. It is therefore considered reasonable that actual capital costs for the unit processes identified may be expected to be between 15% higher to 10% lower than the conceptual estimates presented herein. These percentages should be viewed as statistical confidence limits, and not associated with additional project contingencies.

The probable construction cost pricing for each unit process area identified herein includes the following within the cost line items presented:

General Conditions	Subcontracted Specialty Trades
Supervision	Freight and delivery charges

Project Management	Labor
Bonds	Materials
Insurance	Equipment
Sales taxes	Overhead & Profit
Temporary facilities including utilities (power, water, and communications), field offices, storage, small tools, safety program and equipment, vehicles, fuel, and other support items required by the onsite prime/general contractor.	

A budget for interconnecting yard piping and yard electrical, miscellaneous site improvements and restoration of the general work areas (landscaping, irrigation, paving, sidewalks, etc.) is also included.

The cost estimates shown are related only to costs that would be included in a general contractor's bid for related construction work and does not include other costs such as District administration, engineering, third party construction management, environmental documentation, etc. Costs identified have been prepared for guidance in project evaluation and implementation from the information available at the time of the estimate. The final costs of the project will depend on the type of project delivery selected by the District, actual labor and material costs, competitive market conditions, actual site conditions, final project scope, implementation schedule, and other factors. As a result, the final project costs will vary from estimates presented here. Because of these factors, funding needs must be carefully reviewed prior to making specific financial decisions or establishing project budgets to help ensure project evaluation and adequate funding.

A summary of the conceptual capital costs presented herein is provided in the following table.

Summary of Conceptual Capital Costs for Assessment Options A, B and C

Process	Option A – 1.3 MGD	Option B – 2.6 MGD	Option C – 3.9 MGD
Influent Pump Station	$0	$1,131,928	$1,293,335
Headworks & Grit Removal	0	2,043,111	2,195,870
Aeration Basins	0	3,332,990	5,897,031
Secondary Clarifiers	0	1,964,010	3,581,601
RAS/WAS Pump Station	0	820,187	1,490,724
Scum Pump Station	0	173,323	173,323
Effluent Pump Station	0	788,179	1,542,203
Administration Building	0	0	1,039,893
Blower & Electrical Building	0	2,052,257	2,487,873
Aerobic Digestion	1,461,547	2,759,576	3,936,060
Digested Sludge Pump Station	121,111	229,215	331,281
WAS Thickening	847,504	1,578,858	2,309,062
Sludge Dewatering Centrifuge	915,458	915,458	1,747,885
Tertiary Filters (includes flocculation)	0	648,138	1,296,276
NaOCl Storage, Pumping and Chlorine Contact Tank	0	2,012,465	2,201,274
Total	$3,345,620	$20,449,695	$31,523,691

Option D as identified in the Wastewater Management Plan establishes requirements for estimate of costs associated with the abandonment, decommissioning, demolition and site restoration of the RWCWRF and SBPS. The following table presents a summary of costs for Option D.

Summary of Decommissioning and Demolition Costs of RWCWRF and SBPS

Decommissioning	$492,000
Demolition/Restoration	$3,463,800
Grand Total	$3,955,800

Additional annual power costs associated with the options identified by ARCADIS are presented in Part B of the technical memorandum. The summary of additional power costs above existing operations at 1.3 MGD ADWF is as follows:

Summary of Additional Annual Power Costs

Option A Solids Handling Facilities @ 1.3 MG ADF	$56,168
Option B – Expansion to 2.6 MGD ADF	$581,499
Option C – Expansion to 3.9 MGD ADF	$1,275,534

Additional annual chemical costs associated with the options identified by ARCADIS are presented in Part C of the technical memorandum. The summary of additional chemical costs above existing operations at 1.3 MGD ADWF is as follows:

Summary of Additional Annual Chemical Costs

Option A Solids Handling Facilities @ 1.3 MG ADF	$42,359
Option B – Expansion to 2.6 MGD ADF	$115,665
Option C – Expansion to 3.9 MGD ADF	$204,158

Some of the estimates presented herein for each unit process consider an economy of scale in assessing unit costs for areas such as equipment, ancillary support facilities, labor, concrete (common wall), electrical/I&C related systems, common excavation, general conditions, etc.

This technical memorandum identifies basic conceptual flow design assumptions and criteria for sizing of unit processing and determining scope of improvements associated with the capital improvements for the options assessed. The assumptions and criteria are not intended to be exhaustive relative to parameters that would be used to establish detailed design, rather it is meant only to provide a high level basis for sizing under each option.

Part A – Estimate of Conceptual Capital Costs

1. INFLUENT PUMP STATION SIZING CRITERIA AND ESTIMATES OF PROBABLE CONSTRUCTION COSTS FOR VARIOUS TREATMENT PLANT CAPACITIES

1.1. 1.3 MGD PLANT CAPACITY – OPTION A

1.1.1. SIZING CRITERIA - AVERAGE FLOW: 1.3 MGD

No Influent Pump Station improvements are required for Option A. The existing facility remains in operation in its current size and condition.

1.2. 2.6 MGD PLANT CAPACITY – OPTION B

1.2.1. SIZING CRITERIA - AVERAGE FLOW: 2.6 MGD

1.2.2. INFLUENT PUMP STATION PRELIMINARY DESIGN ASSUMPTIONS

- Abandon existing pump station and construct new 2.6 MGD pump station
- Assume 1 reinforced concrete pump station with wetwell inside dimensions of 61’ L x 10’W x 23’ SWD.
- Assume 3 submersible pumps (2 operating, 1 standby) complete with quick-release coupling and cable rail removal system.
- Assume 8” pump discharge piping into a 12” and 14” discharge manifold complete with piping, valves, supports and appurtenances.
- Assume electrical & instrumentation systems for power and control.

1.2.3. ESTIMATES OF PROBABLE CONSTRUCTION COSTS

Assumptions:

- Costs based on May 2012 dollars
- Preliminary design and associated cost estimates are based upon the design and construction of a similar 2.6 MGD (approximate) water reclamation facility within the State of California.

INFLUENT PUMP STATION – PROBABLE CONSTRUCTION COSTS

Description	Dimensions	Unit	Quantity	Unit Price	Total Price
General Conditions	Approx.15% of Total	LS	1	147,680	147,680
Civil					
Earthwork (Excavation, Backfill, & Grading)	Est. Labor & Equipment	CY	8,600	7	60,200
Site Improvements, Yard Piping & Restoration	Approx. 8% of Total	LS	1	77,280	77,280
Structural (Reinforced Concrete)					
IPS SOG	15'x70'x1.5'	CY	62	597	37,014
IPS Walls (Lower Half)	152'x13'x1.5'	CY	116	854	99,064
IPS Walls (Upper Half)	152'x10'x1.5	CY	89	705	62,745
IPS Deck & Beams	66'x12'x1'	CY	32	1,406	44,992
IPS Mechanical Area SOG	9'x68'x1'	CY	24	468	11,232

Misc. - Hydrotest Tanks & Dewater	Est. Labor & Equipment	LS	1	2,500	2,500
Structural (Misc. Metals)					
Aluminum Access Hatches	Est. Labor + Supplier Pricing	EA	3	3,390	10,170
Hose Racks	Est. Labor + Supplier Pricing	EA	2	200	400
Mechanical					
Submersible Pumps, Bases & Guide Rails	Est. Labor + Supplier Pricing	EA	3	52,828	158,484
Process Piping, Valves & Supports	Est. Labor + Supplier Pricing	LS	1	93,495	93,495
Electrical & Instrumentation					
E&I Power & Control Systems	Average 17.5% of Total	LS	1	160,279	160,279
Testing, Start-Up & Commissioning	Average 1.25% of Total	LS	1	7,500	7,500
Miscellaneous					
Painting & Coatings	Est. Subcontractor Pricing	LS	1	11,250	11,250
Subtotal					984,285
Contingencies @ 15%					147,643
Total					1,131,928

Total Option B relative estimate of probable construction costs = $1,131,928

1.3. 3.9 MGD Plant Capacity – Option C

1.3.1. Sizing Criteria - Average flow: 3.9 MGD

1.3.2. Influent Pump Station Preliminary Design Assumptions

- Abandon existing pump station and construct new 3.9 MGD pump station
- Assume 1 reinforced concrete pump station expansion with wetwell inside dimensions of 61’ L x 15’W x 23’ SWD.
- Assume 3 submersible pumps (2 operating, 1 standby) complete with quick-release coupling and cable rail removal system.
- Assume 8”-10” pump discharge piping into a 14” and 16” discharge manifold complete with piping, valves, supports and appurtenances.
- Assume electrical & instrumentation systems for power and control.

1.3.3. Estimates of Probable Construction Costs

Assumptions:

- Costs based on May 2012 dollars
- Preliminary design and associated cost estimates are based upon the design and construction of a similar 3.9 MGD (approximate) water reclamation facility within the State of California.

INFLUENT PUMP STATION – PROBABLE CONSTRUCTION COSTS

Description	Dimensions	Unit	Quantity	Unit Price	Total Price
General Conditions	Approx. 15% of Total	LS	1	147,680	147,680
Civil					
Earthwork (Excavation, Backfill, & Grading)	Est. Labor & Equipment	CY	9,600	7	67,200
Site Improvements, Yard Piping & Restoration	Approx. 8% of Total	LS	1	77,280	77,280
Structural (Reinforced Concrete)					
IPS SOG	22'x70'x1.5'	CY	90	597	53,730
IPS Walls (Lower Half)	162'x13'x1.5'	CY	123	854	105,042
IPS Walls (Upper Half)	162'x10'x1.5	CY	96	705	67,680
IPS Deck & Beams	66'x12'x1'	CY	32	1,406	44,992
IPS Mechanical Area SOG	9'x68'x1'	CY	24	468	11,232
Misc. - Hydrotest Tanks & Dewater	Est. Labor & Equipment	LS	1	2,500	2,500
Structural (Misc. Metals)					
Aluminum Access Hatches	Est. Labor + Supplier Pricing	EA	3	3,390	10,170
Hose Racks	Est. Labor + Supplier Pricing	EA	2	200	400
Mechanical					
Submersible Pumps, Bases & Guide Rails	Est. Labor + Supplier Pricing	EA	3	72,828	218,484
Process Piping, Valves & Supports	Est. Labor + Supplier Pricing	LS	1	103,495	103,495
Electrical & Instrumentation					
E&I Power & Control Systems	Average 17.5% of Total	LS	1	196,004	196,004
Testing, Start-Up & Commissioning	Average 1.25% of Total	LS	1	7,500	7,500
Miscellaneous					
Painting & Coatings	Est. Subcontractor Pricing	LS	1	11,250	11,250
Subtotal					1,124,639
Contingencies @ 15%					168,696
Total					1,293,335

Total Option C relative estimate of probable construction costs = $1,293,335

1.4. SUMMARY ESTIMATE OF PROBABLE CONSTRUCTION COSTS SUMMARY (BASED ON MAY 2012 DOLLARS) FOR INFLUENT PUMP STATION

Plant Capacity	Estimate of Probable Construction Costs
1.3 MGD	No Improvements Required
2.6 MGD	$1,131,928
3.9 MGD	$1,293,335

2. HEADWORKS AND GRIT REMOVAL SIZING CRITERIA AND ESTIMATES OF PROBABLE CONSTRUCTION COSTS FOR VARIOUS TREATMENT PLANT CAPACITIES

2.1. 1.3 MGD PLANT CAPACITY – OPTION A

2.1.1. SIZING CRITERIA - AVERAGE FLOW: 1.3 MGD

No Headworks and Grit Removal improvements are required for Option A. The existing facility remains in operation in its current size and condition.

2.2. 2.6 MGD PLANT CAPACITY – OPTION B

2.2.1. SIZING CRITERIA - AVERAGE FLOW: 2.6 MGD

2.2.2. HEADWORKS AND GRIT REMOVAL PRELIMINARY DESIGN ASSUMPTIONS

- Assume 1 reinforced concrete structure with overall dimensions of 55’-4” L x 18’W x 11’ D including parallel 4’ channels, two 8’ diameter grit collection tanks, and 1 grit dewatering equipment pad.
- Assume 1 mechanical climber screen and 1 manual bar rack screen in parallel channels.
- Assume 1 screenings screw conveyor with discharge chute.
- Assume 2 grit removal systems including grit pumps and grit dewatering cyclones.
- Assume 4 slide gates for parallel channel flow control.
- Assume 4”-8” interconnecting piping, valves, supports and appurtenances.
- Assume electrical & instrumentation systems for power and control.

2.2.3. ESTIMATES OF PROBABLE CONSTRUCTION COSTS

Assumptions:

- Costs based on May 2012 dollars
- Preliminary design and associated cost estimates are based upon the design and construction of a similar 2.6 MGD (approximate) water reclamation facility within the State of California.

HEADWORKS & GRIT REMOVAL – PROBABLE CONSTRUCTION COSTS

Description	Dimensions / Notes	Unit	Quantity	Unit Price	Total Price
General Conditions	Approx. 15% of Total	LS	1	276,616	276,616
Civil					
Earthwork (Excavation, Backfill, & Grading)	Est. Labor & Equipment	CY	800	9	7,200
Site Improvements, Yard Piping & Restoration	Approx. 8% of Total	LS	1	112,250	112,250
Structural (Reinforced Concrete)					
Grit Tank Sump SOG	14' Diam x 1' (2 Each)	CY	18	481	8,658
Grit Tank Sump Walls	6' Diam x 6' x 1' (2 Each)	CY	10	1,144	11,440
Grit Tank Main Body Slab	10' Diam x 1' (2 Each)	CY	10	766	7,660
Grit Tank Main Body Walls	9' Diam x 12.5' x 1' (2 Each)	CY	32	1,280	40,960
Grit Tank Main Body Deck	12' Diam x 1' (2 Each)	CY	10	1,237	12,370
Headworks SOG (Section 1)	58' x 11' x 8"	CY	18	554	9,972
Headworks SOG (Section 2)	58' x 11' x 8"	CY	18	554	9,972

Headworks Walls (Section 1)	92' x 11' x 1'	CY	40	1,115	44,600
Headworks Walls (Section 2)	92' x 11' x 1'	CY	40	1,115	44,600
Headworks Deck (Partial)	120 SF x 8"	CY	4	1,721	6,884
Grit Cyclone SOG	14' x 28' x 1' (2 Each)	CY	30	667	20,010
Misc. - Hydrotest Tanks & Dewater	Est. Labor & Equipment	LS	1	3,000	3,000
Structural (Misc. Metals)					
Aluminum Checker Plate	Est. Labor + Supplier Pricing	SF	127	60	7,620
Manual Bar Rack & Supports	Est. Labor + Supplier Pricing	EA	1	32,075	32,075
Aluminum Access Hatches	Est. Labor + Supplier Pricing	EA	2	1,365	2,730
Hose Racks	Est. Labor + Supplier Pricing	EA	2	200	400
Mechanical					
Mechanical Bar/Climber Screen Equipment	Est. Labor + Supplier Pricing	EA	1	130,605	130,605
Screw Conveyor & Discharge Chute	Est. Labor + Supplier Pricing	EA	1	129,330	129,330
Grit Pump	Est. Labor + Supplier Pricing	EA	2	77,183	154,366
Grit Dewatering Cyclone	Est. Labor + Supplier Pricing	EA	2	107,468	214,936
Aluminum Slide Gates, Frames & Operators	Est. Labor + Supplier Pricing	EA	4	15,592	62,368
Process Piping, Valves & Supports	Est. Labor + Supplier Pricing	LS	1	78,653	78,653
Electrical & Instrumentation					
E&I Power & Control Systems	Average 17.5% of Total	LS	1	249,900	301,843
Testing, Start-Up & Commissioning	Average 1.25% of Total	LS	1	18,000	18,000
Miscellaneous					
Painting & Coatings	Est. Subcontractor Pricing	LS	1	27,500	27,500
Subtotal					1,776,618
Contingencies @ 15%					266,493
Total					2,043,111

Total Option B relative estimate of probable construction costs = $2,043,111

2.3. 3.9 MGD Plant Capacity – Option C

2.3.1. Sizing Criteria - Average flow: 3.9 MGD

2.3.2. Headworks and Grit Removal Preliminary Design Assumptions

- Assume 1 reinforced concrete structure with overall dimensions of 55’-4” L x 18’W x 11’ D including parallel 5’ channels, two 10’ diameter grit collection tanks, and 1 grit dewatering equipment pad.
- Assume 1 mechanical climber screen and 1 manual bar rack screen in parallel channels.
- Assume 1 screenings screw conveyor with discharge chute.
- Assume 2 grit removal systems including grit pumps and grit dewatering cyclones.
- Assume 4 slide gates for parallel channel flow control.
- Assume 4”-8” interconnecting piping, valves, supports and appurtenances.
- Assume electrical & instrumentation systems for power and control.

2.3.3. ESTIMATES OF PROBABLE CONSTRUCTION COSTS

Assumptions:

- Costs based on May 2012 dollars
- Preliminary design and associated cost estimates are based upon the design and construction of a similar 3.9 MGD (approximate) water reclamation facility within the State of California.

HEADWORKS & GRIT REMOVAL – PROBABLE CONSTRUCTION COSTS

Description	Dimensions / Notes	Unit	Quantity	Unit Price	Total Price
General Conditions	Approx. 15% of Total	LS	1	276,616	276,616
Civil					
Earthwork (Excavation, Backfill, & Grading)	Est. Labor & Equipment	CY	1,500	9	13,500
Site Improvements, Yard Piping & Restoration	Approx. 8% of Total	LS	1	112,250	112,250
Structural (Reinforced Concrete)					
Grit Tank Sump SOG	16' Diam x 1' (2 Each)	CY	24	481	11,544
Grit Tank Sump Walls	8' Diam x 6' x 1' (2 Each)	CY	14	1,144	16,016
Grit Tank Main Body Slab	12' Diam x 1' (2 Each)	CY	14	766	10,724
Grit Tank Main Body Walls	11' Diam x 12.5' x 1' (2 Each)	CY	36	1,280	46,080
Grit Tank Main Body Deck	12' Diam x 1' (2 Each)	CY	14	1,237	17,318
Headworks SOG (Section 1)	58' x 14' x 8"	CY	23	554	12,742
Headworks SOG (Section 2)	58' x 14' x 8"	CY	23	554	12,742
Headworks Walls (Section 1)	92' x 14' x 1'	CY	45	1,115	50,175
Headworks Walls (Section 2)	92' x 14' x 1'	CY	45	1,115	50,175
Headworks Deck (Partial)	120 SF x 8"	CY	4	1,721	6,884
Grit Cyclone SOG	14' x 28' x 1' (2 Each)	CY	30	667	20,010
Misc. - Hydrotest Tanks & Dewater	Est. Labor & Equipment	LS	1	3,000	3,000
Structural (Misc. Metals)					
Aluminum Checker Plate	Est. Labor + Supplier Pricing	SF	160	60	9,600
Manual Bar Rack & Supports	Est. Labor + Supplier Pricing	EA	1	42,075	42,075
Aluminum Access Hatches	Est. Labor + Supplier Pricing	EA	2	2,500	5,000
Hose Racks	Est. Labor + Supplier Pricing	EA	2	200	400
Mechanical					
Mechanical Bar/Climber Screen Equipment	Est. Labor + Supplier Pricing	EA	1	175,605	175,605
Screw Conveyor & Discharge Chute	Est. Labor + Supplier Pricing	EA	1	159,330	159,330
Grit Pump	Est. Labor + Supplier Pricing	EA	2	77,183	154,366
Grit Dewatering Cyclone	Est. Labor + Supplier Pricing	EA	2	107,468	214,936
Aluminum Slide Gates, Frames & Operators	Est. Labor + Supplier Pricing	EA	4	15,592	62,368
Process Piping, Valves & Supports	Est. Labor + Supplier Pricing	LS	1	78,653	78,653
Electrical & Instrumentation					
E&I Power & Control Systems	Average 17.5% of Total	LS	1	343,701	301,843

Testing, Start-Up & Commissioning	Average 1.25% of Total	LS	1	18,000	18,000
Miscellaneous					
Painting & Coatings	Est. Subcontractor Pricing	LS	1	27,500	27,500
Subtotal					1,909,452
Contingencies @ 15%					286,418
Total					2,195,870

Total Option C relative estimate of probable construction costs = $2,195,870

2.4. SUMMARY ESTIMATE OF PROBABLE CONSTRUCTION COSTS SUMMARY (BASED ON MAY 2012 DOLLARS) FOR HEADWORKS AND GRIT REMOVAL

Plant Capacity	Estimate of Probable Construction Costs
1.3 MGD	No Improvements Required
2.6 MGD	$2,043,111
3.9 MGD	$2,195,870

3. AERATION BASIN SIZING CRITERIA AND ESTIMATES OF PROBABLE CONSTRUCTION COSTS FOR VARIOUS TREATMENT PLANT CAPACITIES

3.1. 1.3 MGD PLANT CAPACITY – OPTION A

3.1.1. SIZING CRITERIA - AVERAGE FLOW: 1.3 MGD

No Aeration Basin improvements are required for Option A. The existing facility remains in operation in its current size and condition.

3.2. 2.6 MGD PLANT CAPACITY – OPTION B

3.2.1. SIZING CRITERIA - AVERAGE FLOW: 2.6 MGD

3.2.2. AERATION BASINS PRELIMINARY DESIGN ASSUMPTIONS

- Assume 2 reinforced concrete structures with total overall dimensions of 152’-4” L x 83’-6 W x 18’ D (inside dimensions of 150’ L x 30’ W x 18’ D each basin) including interior zone dividing walls, influent and effluent channels, and access walkways.
- Assume 4 portable submersible mixers for use in the preanoxic and postanoxic zones (16 locations prepared with supports and mounting hardware).
- Assume fine bubble aeration equipment including headers, diffusers and valving in both basins.
- Assume sluice gates and slide gates for influent and effluent channel flow control.
- Assume 8”-16” interconnecting piping, valves, supports and appurtenances.
- Assume electrical & instrumentation systems for power and control.

3.2.3. ESTIMATES OF PROBABLE CONSTRUCTION COSTS

Assumptions:

- Costs based on May 2012 dollars

- Preliminary design and associated cost estimates are based upon the design and construction of a similar 2.6 MGD (approximate) water reclamation facility within the State of California.

AERATION BASINS – PROBABLE CONSTRUCTION COSTS

Description	Dimensions/Clarifications	Unit	Quantity	Unit Price	Total Price
General Conditions	Approx. 15% of Total	LS	1	455,620	455,620
Civil					
Earthwork (Excavation, Backfill, & Grading)	Est. Labor & Equipment	CY	2,800	9	25,200
Site Improvements, Yard Piping & Restoration	Approx. 8% of Total	LS	1	225,926	225,926
Structural (Reinforced Concrete)					
18" Slab On Grade (Center Section 1-4)	15.5' x 25' x 1.5' (4 Each)	CY	90	551	49,590
18" Slab On Grade (Section 5-6)	15.5' x 27.17' x 1.5' (2 Each)	CY	50	509	25,450
18" Slab On Grade (Outer Section 1-8)	25' x 25' x 1.5' (8 Each)	CY	292	495	144,540
18" Slab On Grade (Outer Section 9-12)	25' x 27.17' x 1.5' (4 Each)	CY	159	449	71,391
Walls - 18' Center Dividing (Section 1-6)	181' x 18' x1.17'	CY	152	927	140,904
Walls - 18' Exterior (Section 1-8)	300' x 18' x 1.17'	CY	245	927	227,115
Walls - 18' Exterior (Section 9-12)	110' x 18' x 1.17'	CY	90	920	82,800
Walls - 15' Interior Zones (Section 1-4)	96' x 15' x 1'	CY	56	1,074	60,144
Center Walkway (Section 1-6)	173' x 4' x 6"	CY	17	2,115	35,955
Exterior Walkways (Section 1-8)	250' x 4' x 6"	CY	25	2,175	54,375
Infl Inlet Box Ftg & Support Wall	16.5' x 9' x 1'	CY	6	1,240	7,440
Infl Inlet Box Deck Slab (Section 1)	14' x 16' x 1'	CY	9	1,365	12,285
Infl Inlet Box Walls (Section 1)	36' x 9' x 1'	CY	13	1,053	13,689
Influent Channel Deck Slab	64' x 5' x 6"	CY	13	1,374	17,862
Influent Channel Walls	74' x 9' x 1'	CY	26	1,045	27,170
Misc. - Hydrotest Tanks & Dewater	Est. Labor & Equipment	LS	1	5,000	5,000
Structural (Misc. Metals)					
Checker Plate	Est. Labor + Supplier Pricing	SF	380	42	15,960
Stairs	Est. Labor + Supplier Pricing	EA	1	5,940	5,940
Handrails	Est. Labor + Supplier Pricing	LF	1,030	55	56,650
Precast Vault & Hatch	Est. Labor + Supplier Pricing	EA	1	6,960	6,960
Hose Racks	Est. Labor + Supplier Pricing	EA	6	270	1,620
					87,130
Mechanical					
Submersible Mixers	Est. Labor + Supplier Pricing	EA	4	31,448	125,792
MLSS Return Pumps & Piping	Est. Labor + Supplier Pricing	EA	2	50,000	100,000
Fine Bubble Aeration Equipment	Est. Labor + Supplier Pricing	EA	2	81,192	162,384
C.I. Sluice Gates, Frames & Operators	Est. Labor + Supplier Pricing	EA	2	6,990	13,980
Aluminum Slide Gates, Frames & Operators	Est. Labor + Supplier Pricing	EA	2	6,825	13,650
Process Piping, Valves & Supports	Est. Labor + Supplier Pricing	LS	1	170,154	170,154
Electrical & Instrumentation					
E&I Power & Control Systems	Average 17.5% of Total	LS	1	497,250	497,250
Testing, Start-Up & Commissioning	Average 1.25% of Total	LS	1	31,500	31,500

Miscellaneous					
Painting & Coatings	Est. Subcontractor Pricing	LS	1	27,000	27,000
Subtotal					2,911,296
Contingencies @ 15%					421,694
Total					3,332,990

Total Option B relative estimate of probable construction costs = $3,332,990

3.3. 3.9 MGD Plant Capacity – Option C

3.3.1. Sizing Criteria - Average flow: 3.9 MGD

3.3.2. Aeration Basins Preliminary Design Assumptions

- Assume 4 reinforced concrete structures with total overall dimensions of 152'-4" L x 83'-6 W x 18' D (inside dimensions of 150' L x 30' W x 18' D each basin) including interior zone dividing walls, influent and effluent channels, and access walkways.
- Assume 8 portable submersible mixers for use in the preanoxic and postanoxic zones (32 locations prepared with supports and mounting hardware).
- Assume 4 MLSS Return Pumps, 1 per aeration pass
- Assume fine bubble aeration equipment including headers, diffusers and valving in both basins.
- Assume sluice gates and slide gates for influent and effluent channel flow control.
- Assume 8"-16" interconnecting piping, valves, supports and appurtenances.
- Assume electrical & instrumentation systems for power and control.

3.3.3. Estimates of Probable Construction Costs

Assumptions:

- Costs based on May 2012 dollars
- Preliminary design and associated cost estimates are based upon the design and construction of a similar 3.9 MGD (approximate) water reclamation facility within the State of California.

AERATION BASINS – PROBABLE CONSTRUCTION COSTS

Description	Dimensions	Unit	Quantity	Unit Price	Total Price
General Conditions	Approx. 15% of Total	LS	1	455,620	455,620
Civil					
Earthwork (Excavation, Backfill, & Grading)	Est. Labor & Equipment	CY	5,600	9	50,400
Site Improvements, Yard Piping & Restoration	Approx. 8% of Total	LS	1	305,000	305,000
Structural (Reinforced Concrete)					
18" Slab On Grade (Center Section 1-4)	15.5' x 25' x 1.5' (8 Each)	CY	180	551	99,180
18" Slab On Grade (Section 5-6)	15.5' x 27.17' x 1.5' (4 Each)	CY	100	509	50,900
18" Slab On Grade (Outer Section 1-8)	25' x 25' x 1.5' (16 Each)	CY	584	495	289,080

18" Slab On Grade (Outer Section 9-12)	25' x 27.17' x 1.5' (8 Each)	CY	318	449	142,782
Walls - 18' Center Dividing (Section 1-6)	181' x 18' x1.17' (2 Each)	CY	304	927	281,808
Walls - 18' Exterior (Section 1-8)	300' x 18' x 1.17' (2 Each)	CY	490	927	454,230
Walls - 18' Exterior (Section 9-12)	110' x 18' x 1.17' (2 Each)	CY	180	920	165,600
Walls - 15' Interior Zones (Section 1-4)	96' x 15' x 1' (2 Each)	CY	112	1,074	120,288
Center Walkway (Section 1-6)	173' x 4' x 6" (2 Each)	CY	34	2,115	71,910
Exterior Walkways (Section 1-8)	250' x 4' x 6" (2 Each)	CY	50	2,175	108,750
Infl Inlet Box Ftg & Support Wall	16.5' x 9' x 1' (2 Each)	CY	12	1,240	14,880
Infl Inlet Box Deck Slab (Section 1)	14' x 16' x 1' (2 Each)	CY	18	1,365	24,570
Infl Inlet Box Walls (Section 1)	36' x 9' x 1' (2 Each)	CY	26	1,053	27,378
Influent Channel Deck Slab	64' x 5' x 6" (2 Each)	CY	26	1,374	35,724
Influent Channel Walls	74' x 9' x 1' (2 Each)	CY	52	1,045	54,340
Misc. - Hydrotest Tanks & Dewater	Est. Labor & Equipment	LS	1	10,000	10,000
Structural (Misc. Metals)					
Checker Plate	Est. Labor + Supplier Pricing	SF	720	42	30,240
Stairs	Est. Labor + Supplier Pricing	EA	2	5,940	11,880
Handrails	Est. Labor + Supplier Pricing	LF	2,060	55	113,300
Precast Vault & Hatch	Est. Labor + Supplier Pricing	EA	2	6,960	13,920
Hose Racks	Est. Labor + Supplier Pricing	EA	12	270	3,240
Mechanical					
Submersible Mixers	Est. Labor + Supplier Pricing	EA	8	31,448	251,584
MLSS Return Pumps & Piping	Est. Labor + Supplier Pricing	EA	4	50,000	200,000
Fine Bubble Aeration Equipment	Est. Labor + Supplier Pricing	EA	4	81,192	324,768
C.I. Sluice Gates, Frames & Operators	Est. Labor + Supplier Pricing	EA	4	6,990	27,960
Aluminum Slide Gates, Frames & Operators	Est. Labor + Supplier Pricing	EA	4	6,825	27,300
Process Piping, Valves & Supports	Est. Labor + Supplier Pricing	LS	2	170,154	340,308
Electrical & Instrumentation					
E&I Power & Control Systems	Average 17.5% of Total	LS	2	465,000	930,000
Testing, Start-Up & Commissioning	Average 1.25% of Total	LS	2	31,500	63,000
Miscellaneous					
Painting & Coatings	Est. Subcontractor Pricing	LS	2	27,000	54,000
Subtotal					5,153,940
Contingencies @ 15%					743,091
Total					5,897,031

Total Option C relative estimate of probable construction costs = $5,897,031

3.4. Estimate of Probable Construction Costs Summary (based on May 2012 dollars) For Aeration Basins

Plant Capacity	Estimate of Probable Construction Costs**
1.3 MGD	No Improvements Required

2.6 MGD	$3,332,990
3.9 MGD	$5,897,031

4. SECONDARY CLARIFIERS SIZING CRITERIA AND ESTIMATES OF PROBABLE CONSTRUCTION COSTS FOR VARIOUS TREATMENT PLANT CAPACITIES

4.1. 1.3 MGD PLANT CAPACITY – OPTION A

4.1.1. SIZING CRITERIA - AVERAGE FLOW: 1.3 MGD

No Secondary Clarifier improvements are required for Option A. The existing facility remains in operation in its current size and condition.

4.2. 2.6 MGD PLANT CAPACITY – OPTION B

4.2.1. SIZING CRITERIA - AVERAGE FLOW: 2.6 MGD

4.2.2. SECONDARY CLARIFIERS PRELIMINARY DESIGN ASSUMPTIONS

- Assume 2 reinforced concrete structures with total overall dimensions of 96’-5” L x 43’-6 W x 15’ D (inside dimensions of 94’ L x 20’ W x 15’ D each basin) including influent and effluent channels, hoppers and access walkways.
- Assume chain and flight sludge collection equipment in each basin.
- Assume rotating scum collection equipment in each basin.
- Assume FRL launders, weirs and supports in the effluent end of each basin.
- Assume slide gates for influent and effluent channel flow control.
- Assume 6”-8” interconnecting piping, valves, supports and appurtenances.
- Assume electrical & instrumentation systems for power and control.

4.2.3. ESTIMATES OF PROBABLE CONSTRUCTION COSTS

Assumptions:

- Costs based on May 2012 dollars
- Preliminary design and associated cost estimates are based upon the design and construction of a similar 2.6 MGD (approximate) water reclamation facility within the State of California.

SECONDARY CLARIFIERS – PROBABLE CONSTRUCTION COSTS

Description	Dimensions/Clarifications	Unit	Quantity	Unit Price	Total Price
General Conditions	Approx. 15% of Total	LS	1	265,300	265,300
Civil					
Earthwork (Excavation, Backfill, & Grading)	Est. Labor & Equipment	CY	1,520	9	13,680
Site Improvements, Yard Piping & Restoration	Approx. 8% of Total	LS	1	141,230	141,230
Structural (Reinforced Concrete)					
Sludge Hopper SOG (Section 1)	6' x 11' x 1'	CY	4	759	3,036
Sludge Hopper SOG (Section 2)	11' x 20' x 1.5' (2 Each)	CY	26	536	13,936
Center Div. Wall SOG (Section 1-4)	6' x 21.6' x 1.5' (4 each)	CY	31	698	21,638
Main Slab On Grade (Section 1-8)	20' x 21.6' x 1.5' (8 Each)	CY	202	491	99,182

Walls- Interior Div. (Section 1)	16' x 20' x 1.5'	CY	18	854	15,372
Walls- Interior Div. (Section 2-5)	93' x 15' x 1.17'	CY	64	939	60,096
Walls - Exterior (Section 1-2)	62' x 20' x 1.17'	CY	57	942	53,694
Walls - Exterior (Section 3-10)	216' x 15' x 1.17'	CY	146	933	136,218
Deck - Infl Channel Invert (Section 1-3)	43.5' x 5' x 1'	CY	9	1,198	10,782
Walls - Infl Channel (Section 1-3)	54' x 6' x 1'	CY	13	1,168	15,184
Deck - Effl Channel Invert (Section 1-3)	43.5' x 5' x 1'	CY	9	1,198	10,782
Walls - Effl Channel (Section 1-3)	54' x 8' x 1'	CY	17	1,153	19,601
Center Walkway (Section 1-5)	97' x 5' x 6"	CY	12	2,097	25,164
Effl Drop Box Slab at Effl Channel	5' x 5'	CY	2	979	1,958
Effl Drop Box Walls at Effl Channel	20' x 6' x 1'	CY	5	1,143	5,715
Misc. - Hydrotest Tanks & Dewater	Est. Labor & Equipment	LS	1	5,000	5,000
Structural (Misc. Metals)					
Aluminum Grating	Est. Labor + Supplier Pricing	SF	328	51	16,728
Stairs	Est. Labor + Supplier Pricing	EA	1	6,645	6,645
Handrails	Est. Labor + Supplier Pricing	LF	530	55	29,150
Hose Racks	Est. Labor + Supplier Pricing	EA	6	270	1,620
Mechanical					
Sludge Collection Equipment	Est. Labor + Supplier Pricing	EA	2	88,222	176,444
Rotating Scum Troughs	Est. Labor + Supplier Pricing	EA	2	20,700	41,400
Aluminum Slide Gates, Frames & Operators	Est. Labor + Supplier Pricing	EA	8	10,425	83,400
FRP Weirs, Launders & Supports	Est. Labor + Supplier Pricing	EA	4	18,630	74,520
Process Piping, Valves & Supports	Est. Labor + Supplier Pricing	LS	1	15,360	15,360
Electrical & Instrumentation					
E&I Power & Control Systems	Average 17.5% of Total	LS	1	301,500	301,500
Testing, Start-Up & Commissioning	Average 1.25% of Total	LS	1	21,000	21,000
Miscellaneous					
Painting & Coatings	Est. Subcontractor Pricing	LS	1	22,500	22,500
Subtotal					1,707,835
Contingencies @ 15%					256,175
Total					1,964,010

Total Option B relative estimate of probable construction costs = $1,964,010

4.3. 3.9 MGD Plant Capacity – Option C

4.3.1. Sizing Criteria - Average flow: 3.9 MGD

4.3.2. Secondary Clarifiers Preliminary Design Assumptions

- Assume 4 reinforced concrete structures with total overall dimensions of 96’-5” L x 43’-6 W x 15’ D (inside dimensions of 94’ L x 20’ W x 15’ D each basin) including influent and effluent channels, hoppers and access walkways.
- Assume chain and flight sludge collection equipment in each basin.

- Assume rotating scum collection equipment in each basin.
- Assume FRL launders, weirs and supports in the effluent end of each basin.
- Assume slide gates for influent and effluent channel flow control.
- Assume 6”-8” interconnecting piping, valves, supports and appurtenances.
- Assume electrical & instrumentation systems for power and control.

4.3.3. ESTIMATES OF PROBABLE CONSTRUCTION COSTS

Assumptions:

- Costs based on May 2012 dollars
- Preliminary design and associated cost estimates are based upon the design and construction of a similar 3.9 MGD (approximate) water reclamation facility within the State of California.

SECONDARY CLARIFIERS – PROBABLE CONSTRUCTION COSTS

Description	Dimensions	Unit	Quantity	Unit Price	Total Price
General Conditions	Approx. 15% of Total	LS	1	265,300	265,300
Civil					
Earthwork (Excavation, Backfill, & Grading)	Est. Labor & Equipment	CY	3,040	9	27,360
Site Improvements, Yard Piping & Restoration	Approx. 8% of Total	LS	2	141,230	282,460
Structural (Reinforced Concrete)					
Sludge Hopper SOG (Section 1)	6' x 11' x 1' (2 Each)	CY	8	759	6,072
Sludge Hopper SOG (Section 2)	11' x 20' x 1.5' (4 Each)	CY	52	536	27,872
Center Div. Wall SOG (Section 1-4)	6' x 21.6' x 1.5' (8 each)	CY	62	698	43,276
Main Slab On Grade (Section 1-8)	20' x 21.6' x 1.5' (16 Each)	CY	404	491	198,364
Walls- Interior Div. (Section 1)	16' x 20' x 1.5' (2 Each)	CY	36	854	30,744
Walls- Interior Div. (Section 2-5)	93' x 15' x 1.17' (2 Each)	CY	128	939	120,192
Walls - Exterior (Section 1-2)	62' x 20' x 1.17' (2 Each)	CY	114	942	107,388
Walls - Exterior (Section 3-10)	216' x 15' x 1.17' (2 Each)	CY	292	933	272,436
Deck - Infl Channel Invert (Section 1-3)	43.5' x 5' x 1' (2 Each)	CY	18	1,198	21,564
Walls - Infl Channel (Section 1-3)	54' x 6' x 1' (2 each)	CY	26	1,168	30,368
Deck - Effl Channel Invert (Section 1-3)	43.5' x 5' x 1' (2 Each)	CY	18	1,198	21,564
Walls - Effl Channel (Section 1-3)	54' x 8' x 1' (2 Each)	CY	34	1,153	39,202
Center Walkway (Section 1-5)	97' x 5' x 6" (2 Each)	CY	24	2,097	50,328
Effl Drop Box Slab at Effl Channel	5' x 5' (2 Each)	CY	4	979	3,916
Effl Drop Box Walls at Effl Channel	20' x 6' x 1' (2 each)	CY	10	1,143	11,430
Misc. - Hydrotest Tanks & Dewater	Est. Labor & Equipment	LS	2	5,000	10,000
Structural (Misc. Metals)					
Aluminum Grating	Est. Labor + Supplier Pricing	SF	656	51	33,456
Stairs	Est. Labor + Supplier Pricing	EA	2	6,645	13,290
Handrails	Est. Labor + Supplier Pricing	LF	1,060	55	58,300
Hose Racks	Est. Labor + Supplier Pricing	EA	12	270	3,240
Mechanical					
Sludge Collection Equipment	Est. Labor + Supplier Pricing	EA	4	88,222	352,888

Rotating Scum Troughs	Est. Labor + Supplier Pricing	EA	4	20,700	82,800
Aluminum Slide Gates, Frames & Operators	Est. Labor + Supplier Pricing	EA	16	10,425	166,800
FRP Weirs, Launders & Supports	Est. Labor + Supplier Pricing	EA	8	18,630	149,040
Process Piping, Valves & Supports	Est. Labor + Supplier Pricing	LS	2	15,360	30,720
Electrical & Instrumentation					
E&I Power & Control Systems	Average 17.5% of Total	LS	2	283,533	567,066
Testing, Start-Up & Commissioning	Average 1.25% of Total	LS	2	21,000	42,000
Miscellaneous					
Painting & Coatings	Est. Subcontractor Pricing	LS	2	22,500	45,000
Subtotal					3,114,436
Contingencies @ 15%					467,165
Total					3,581,601

Total Option C relative estimate of probable construction cost = $3,581,601

4.4. Estimate of Probable Construction Costs Summary (based on May 2012 dollars) For Secondary Clarifiers

Plant Capacity	Estimate of Probable Construction Costs
1.3 MGD	No Improvements Required
2.6 MGD	$1,964,010
3.9 MGD	$3,581,601

5. RAS/WAS Pump Station Sizing Criteria and Estimates of Probable Construction Costs for Various Treatment Plant Capacities

5.1. 1.3 MGD Plant Capacity – Option A

5.1.1. Sizing Criteria - Average flow: 1.3 MGD

No RAS/WAS Pump Station improvements are required for Option A. The existing facility remains in operation in its current size and condition.

5.2. 2.6 MGD Plant Capacity – Option B

5.2.1. Sizing Criteria - Average flow: 2.6 MGD

5.2.2. RAS/WAS Pump Station Preliminary Design Assumptions

- Assume 1 reinforced concrete dry-pit pump station structure with inside dimensions of 41-2” L x 26’-10” W x 20’ D including stairs and pump foundations.
- Assume 3 horizontal centrifugal or progressive cavity skid-mounted RAS pumps & motors.
- Assume 2 horizontal centrifugal or progressive cavity skid-mounted WAS pumps & motors.
- Assume 1 duplex submersible drain pump system.
- Assume 4”-12” interconnecting piping, valves, supports and appurtenances.
- Assume electrical & instrumentation systems for power and control.

5.2.3. ESTIMATES OF PROBABLE CONSTRUCTION COSTS

Assumptions:

- Costs based on May 2012 dollars
- Preliminary design and associated cost estimates are based upon the design and construction of a similar 2.6 MGD (approximate) water reclamation facility within the State of California.

RAS/WAS PUMP STATION – PROBABLE CONSTRUCTION COSTS

Description	Dimensions/Clarifications	Unit	Quantity	Unit Price	Total Price
General Conditions	Approx. 15% of Total	LS	1	110,530	110,530
Civil					
Earthwork (Excavation, Backfill, & Grading)	Est. Labor & Equipment	CY	600	9	5,400
Site Improvements, Yard Piping & Restoration	Approx. 8% of Total	LS	1	63,434	63,434
Structural (Reinforced Concrete)					
RAS/WAS 18" SOG (Section 1-4)	16.25' x 23' x 1.5' (4 Each)	CY	88	544	47,872
RAS/WAS Exterior Walls (Section 1-2)	104' x 20' x 1.17'	CY	95	1,160	110,200
Structural (Misc. Metals)					
Aluminum Grating	Est. Labor + Supplier Pricing	SF	50	49	2,450
Stairs	Est. Labor + Supplier Pricing	EA	1	14,760	14,760
Handrails	Est. Labor + Supplier Pricing	LF	80	55	4,400
Hose Racks	Est. Labor + Supplier Pricing	EA	2	270	540
Mechanical					
RAS Pumps & Motors	Est. Labor + Supplier Pricing	EA	3	16,710	50,130
WAS Pumps & Motors	Est. Labor + Supplier Pricing	EA	2	12,810	25,620
Drain Submersible Duplex Pump	Est. Labor + Supplier Pricing	EA	1	7,470	7,470
Process Piping, Valves & Supports	Est. Labor + Supplier Pricing	LS	1	128,100	128,100
Electrical & Instrumentation					
E&I Power & Control Systems	Average 17.5% of Total	LS	1	124,800	124,800
Testing, Start-Up & Commissioning	Average 1.25% of Total	LS	1	10,000	10,000
Miscellaneous					
Painting & Coatings	Est. Subcontractor Pricing	LS	1	7,500	7,500
Subtotal					713,206
Contingencies @ 15%					106,981
Total					820,187

Total Option B relative estimate of probable construction costs = $820,187

5.3. 3.9 MGD Plant Capacity – Option C

5.3.1. Sizing Criteria – Average flow: 3.9 MGD

5.3.2. RAS/WAS Pump Station Preliminary Design Assumptions

- Assume 1 reinforced concrete dry-pit pump station structure with inside dimensions of 82-4" L x 26'-10" W x 20' D including stairs and pump foundations.
- Assume 6 horizontal centrifugal or progressive cavity skid-mounted RAS pumps & motors.
- Assume 4 horizontal centrifugal or progressive cavity skid-mounted WAS pumps & motors.
- Assume 2 duplex submersible drain pump system.
- Assume 4"-12" interconnecting piping, valves, supports and appurtenances.
- Assume electrical & instrumentation systems for power and control.

5.3.3. Estimates of Probable Construction Costs

Assumptions:

- Costs based on May 2012 dollars
- Preliminary design and associated cost estimates are based upon the design and construction of a similar 3.9 MGD (approximate) water reclamation facility within the State of California.

RAS/WAS PUMP STATION – PROBABLE CONSTRUCTION COSTS

Description	Dimensions	Unit	Quantity	Unit Price	Total Price
General Conditions	Approx. 15% of Total	LS	1	110,530	110,530
Civil					
Earthwork (Excavation, Backfill, & Grading)	Est. Labor & Equipment	CY	1,200	9	10,800
Site Improvements, Yard Piping & Restoration	Approx. 8% of Total	LS	2	63,434	126,868
Structural (Reinforced Concrete)					
RAS/WAS 18" SOG (Section 1-4)	16.25' x 23' x 1.5' (8 Each)	CY	176	544	95,744
RAS/WAS Exterior Walls (Section 1-2)	104' x 20' x 1.17' (2 Each)	CY	190	1,160	220,400
Structural (Misc. Metals)					
Aluminum Grating	Est. Labor + Supplier Pricing	SF	100	49	4,900
Stairs	Est. Labor + Supplier Pricing	EA	2	14,760	29,520
Handrails	Est. Labor + Supplier Pricing	LF	160	55	8,800
Hose Racks	Est. Labor + Supplier Pricing	EA	4	270	1,080
Mechanical					
RAS Pumps & Motors	Est. Labor + Supplier Pricing	EA	6	16,710	100,260

WAS Pumps & Motors	Est. Labor + Supplier Pricing	EA	4	12,810	51,240
Drain Submersible Duplex Pump	Est. Labor + Supplier Pricing	EA	2	7,470	14,940
Process Piping, Valves & Supports	Est. Labor + Supplier Pricing	LS	2	128,100	256,200
Electrical & Instrumentation					
E&I Power & Control Systems	Average 17.5% of Total	LS	2	115,000	230,000
Testing, Start-Up & Commissioning	Average 1.25% of Total	LS	2	10,000	20,000
Miscellaneous					
Painting & Coatings	Est. Subcontractor Pricing	LS	2	7,500	15,000
Subtotal					1,296,282
Contingencies @ 15%					194,442
Total					1,490,724

Total Option C relative estimate of probable construction cost = $1,490,724

5.3.4. Estimate of Probable Construction Costs Summary (based on May 2012 dollars) For RAS/WAS Pump Station

Plant Capacity	Estimate of Probable Construction Costs
1.3 MGD	No Improvement Required
2.6 MGD	$820,187
3.9 MGD	$1,490,724

6. Aerobic Digestion Sizing Criteria and Estimates of Probable Construction Costs for Various Treatment Plant Capacities

6.1. MGD Plant Capacity – Option A

6.1.1. Sizing Criteria – Average flow: 1.3 MGD

- Thickened WAS (TWAS) production at 1.3 MGD Capacity
- Reference JSME November 12, 1989 *Preliminary Design Submittal for Jamacha Basin Water Reclamation Facility Upgrade and Expansion Project*
- Pounds TWAS total solids per day = 2,730 lbs TSS/day
- Gallons per day (assume TWAS @ 4.0% TSS) = 8,100 GPD
- Aerobic Digester Capacity
- Detention time @ 40 days to meet “Class B” requirements
- Digester volume required for 40 day detention time is 324,000 active gallons (43,300 cu. Ft.)

6.1.2. Aerobic Digester Preliminary Design Assumptions

- Assume 1 reinforced concrete structures with total overall dimensions of 152’ L x 23-6” W x 18’ D (divided into 3 tanks with inside dimensions of 49’-4” L x 19-6’ W x 15’SWD) including access walkways (T-walkways).
- Assume 1 reinforced concrete pad for digester aeration air blowers.
- Assume coarse bubble aeration equipment in each of the three tanks.
- Assume 2 positive displace blowers (1operational, 1 standby)
- Assume 1 telescoping valve in each of the three tanks.
- Assume 4”-16” interconnecting piping, valves, supports and appurtenances.
- Assume electrical & instrumentation systems for power and control.

6.1.3. ESTIMATES OF PROBABLE CONSTRUCTION COSTS

Assumptions:

- Costs based on May 2012 dollars
- Preliminary design and associated cost estimates are based upon the design and construction of a similar 1.3 MGD (approximate) water reclamation facility within the State of California.

AEROBIC DIGESTER – PROBABLE CONSTRUCTION COSTS

Description	Dimensions	Unit	Quantity	Unit Price	Total Price
General Conditions	Approx. 15% of Total	LS	1	183,033	183,033
Civil					
Earthwork (Excavation, Backfill, & Grading)	Est. Labor & Equipment	CY	1,500	9	13,500
Site Improvements, Yard Piping & Restoration	Approx. 8% of Total	LS	1	87,250	87,250
Structural (Reinforced Concrete)					
18" SOG (Section 1-4)	25' x 27.17' x 1.5' (4 Each)	CY	159	564	89,676
18" SOG (Section 5-6)	27' x 27.17' x 1.5' (2 Each)	CY	85	443	37,655
Walls - Exterior (Section 1-6)	207' x 18' x 1.17'	CY	170	922	156,740
Walls - Exterior (Section 3-5)	55' x 18' x 1.17'	CY	45	922	41,490
Misc. - Hydrotest Tanks & Dewater	Est. Labor & Equipment	LS	1	4,000	4,000
PD Blower SOG	25' x 25' x 1.5' (1 Each)	CY	37	443	16,391
Structural (Misc. Metals)					
Handrails	Est. Labor + Supplier Pricing	LF	120	55	6,600
Hose Racks	Est. Labor + Supplier Pricing	EA	4	300	1,200
Mechanical					
Telescoping Valves	Est. Labor + Supplier Pricing	EA	3	4,980	14,940
Coarse Bubble Aeration Equipment	Est. Labor + Supplier Pricing	EA	3	44,059	132,177
Positive Displacement Blowers	Est. Labor + Supplier Pricing	EA	2	50,000	100,000
Process Piping, Valves & Supports	Est. Labor + Supplier Pricing	LS	1	124,554	124,554
Electrical & Instrumentation					
E&I Power & Control Systems	Average 17.5% of Total	LS	1	223,204	223,204
Testing, Start-Up & Commissioning	Average 1.25% of Total	LS	1	13,000	13,000

Miscellaneous					
Painting & Coatings	Est. Subcontractor Pricing	LS	1	25,500	25,500
Subtotal					1,270,910
Contingencies @ 15%					190,637
Total					1,461,547

Total Option A relative estimate of probable construction costs = $1,461,547

6.2. 2.6 MGD Plant Capacity – Option B

6.2.1. Sizing Criteria – Average flow: 2.6 MGD

- Thickened WAS (TWAS) production at 2.6 MGD Capacity
- Reference JSME November 12, 1989 *Preliminary Design Submittal for Jamacha Basin Water Reclamation Facility Upgrade and Expansion Project*
- Pounds TWAS total solids per day = 5469 lbs TSS/day
- Gallons per day (assume TWAS @ 4.0% TSS) = 16,200 GPD
- Aerobic Digester Capacity
- Detention time @ 40 days to meet "Class B" requirements
- Digester volume required for 40 day detention time is 648,000 active gallons

6.2.2. Aerobic Digester Preliminary Design Assumptions

- Assume 2 reinforced concrete structures with total overall dimensions of 152'-4" L x 20'-2" W x 18' D (each divided into 3 tanks with inside dimensions of 49'-4" L x 27' W x 18' D) including access walkways.
- Assume 1 reinforced concrete pad for digester aeration air blowers.
- Assume coarse bubble aeration equipment in each of the three tanks in each digester.
- Assume 3 positive displace blowers (2 operational, 1 standby)
- Assume 1 telescoping valve in each of the three tanks in each digester.
- Assume 4"-16" interconnecting piping, valves, supports and appurtenances.
- Assume electrical & instrumentation systems for power and control.

6.2.3. Estimates of Probable Construction Costs

Assumptions:

- Costs based on May 2012 dollars
- Preliminary design and associated cost estimates are based upon the design and construction of a similar 2.6 MGD (approximate) water reclamation facility within the State of California.

AEROBIC DIGESTER – PROBABLE CONSTRUCTION COSTS

Description	Dimensions	Unit	Quantity	Unit Price	Total Price
General Conditions	Approx. 15% of Total	LS	1	289,085	289,085

Civil					
Earthwork (Excavation, Backfill, & Grading)	Est. Labor & Equipment	CY	3,000	9	27,000
Site Improvements, Yard Piping & Restoration	Approx. 8% of Total	LS	1	174,500	174,500
Structural (Reinforced Concrete)					
18" SOG (Section 1-4)	25' x 27.17' x 1.5' (8 Each)	CY	318	564	179,352
18" SOG (Section 5-6)	27' x 27.17' x 1.5' (4 Each)	CY	170	443	75,310
Walls - Exterior (Section 1-6)	207' x 18' x 1.17' (2 Each)	CY	340	922	313,480
Walls - Exterior (Section 3-5)	55' x 18' x 1.17' (2 Each)	CY	90	922	82,980
Misc. - Hydrotest Tanks & Dewater	Est. Labor & Equipment	LS	2	4,000	8,000
PD Blower SOG	25' x 25' x 1.5' (2 Each)	CY	74	443	32,782
Structural (Misc. Metals)					
Handrails	Est. Labor + Supplier Pricing	LF	240	55	13,200
Hose Racks	Est. Labor + Supplier Pricing	EA	8	300	2,400
Mechanical					
Telescoping Valves	Est. Labor + Supplier Pricing	EA	6	4,980	29,880
Coarse Bubble Aeration Equipment	Est. Labor + Supplier Pricing	EA	6	44,059	264,354
Positive Displacement Blowers	Est. Labor + Supplier Pricing	EA	3	50,000	150,000
Process Piping, Valves & Supports	Est. Labor + Supplier Pricing	LS	2	124,554	249,108
Electrical & Instrumentation					
E&I Power & Control Systems	Average 17.5% of Total	EA	2	215,600	431,200
Testing, Start-Up & Commissioning	Average 1.25% of Total	EA	2	13,000	26,000
Miscellaneous					
Painting & Coatings	Est. Subcontractor Pricing	EA	2	25,500	51,000
Subtotal					2,399,631
Contingencies @ 15%					359,945
Total					2,759,576

Total Option B relative estimate of probable construction cost = $2,759,576

6.3. 3.9 MGD Plant Capacity – Option C

6.3.1. Sizing Criteria – Average flow: 3.9 MGD

- Thickened WAS (TWAS) production at 3.9 MGD Capacity
- Reference JSME November 12, 1989 *Preliminary Design Submittal for Jamacha Basin Water Reclamation Facility Upgrade and Expansion Project*
- Pounds TWAS total solids per day = 8,190 lbs TSS/day
- Gallons per day (assume TWAS @ 4.0% TSS) = 24,300 GPD
- Aerobic Digester Capacity
- Detention time @ 40 days to meet "Class B" requirements
- Digester volume required for 40 day detention time is 972,000 active gallons

6.3.2. Aerobic Digester Preliminary Design Assumptions

- Assume 3 reinforced concrete structures with total overall dimensions of 152'-4" L x 20'-2" W x 18' D (each divided into 3 tanks with inside dimensions of 49'-4" L x 27' W x 18' D) including access walkways.
- Assume 1 reinforced concrete pad for digester aeration air blowers.
- Assume coarse bubble aeration equipment in each of the three tanks in each digester.
- Assume 4 positive displace blowers (3 operational, 1 standby)
- Assume 1 telescoping valve in each of the three tanks in each digester.
- Assume 4"-16" interconnecting piping, valves, supports and appurtenances.
- Assume electrical & instrumentation systems for power and control.

6.3.3. Estimates of Probable Construction Costs

Assumptions:

- Costs based on May 2012 dollars
- Preliminary design and associated cost estimates are based upon the design and construction of a similar 3.9 MGD (approximate) water reclamation facility within the State of California.

AEROBIC DIGESTER – PROBABLE CONSTRUCTION COSTS

Description	Dimensions	Unit	Quantity	Unit Price	Total Price
General Conditions	Approx. 15% of Total	LS	1	329,085	329,085
Civil					
Earthwork (Excavation, Backfill, & Grading)	Est. Labor & Equipment	CY	4,500	9	40,500
Site Improvements, Yard Piping & Restoration	Approx. 8% of Total	LS	1	261,750	261,750
Structural (Reinforced Concrete)					
18" SOG (Section 1-4)	25' x 27.17' x 1.5' (12 Each)	CY	477	564	269,028
18" SOG (Section 5-6)	27' x 27.17' x 1.5' (6 Each)	CY	255	443	112,965

Walls - Exterior (Section 1-6)	207' x 18' x 1.17' (3 Each)	CY	510	922	470,220
Walls - Exterior (Section 3-5)	55' x 18' x 1.17' (3 Each)	CY	135	922	124,470
Misc. - Hydrotest Tanks & Dewater	Est. Labor & Equipment	LS	3	4,000	12,000
PD Blower SOG	25' x 25' x 1.5' (3 Each)	CY	110	443	48,730
Structural (Misc. Metals)					
Handrails	Est. Labor + Supplier Pricing	LF	360	55	19,800
Hose Racks	Est. Labor + Supplier Pricing	EA	12	300	3,600
Mechanical					
Telescoping Valves	Est. Labor + Supplier Pricing	EA	9	4,980	44,820
Coarse Bubble Aeration Equipment	Est. Labor + Supplier Pricing	EA	9	44,059	396,531
Positive Displacement Blowers	Est. Labor + Supplier Pricing	EA	4	50,000	200,000
Process Piping, Valves & Supports	Est. Labor + Supplier Pricing	LS	3	124,554	373,662
Electrical & Instrumentation					
E&I Power & Control Systems	Average 17.5% of Total	EA	3	200,000	600,000
Testing, Start-Up & Commissioning	Average 1.25% of Total	EA	3	13,000	39,000
Miscellaneous					
Painting & Coatings	Est. Subcontractor Pricing	EA	3	25,500	76,500
Subtotal					3,422,661
Contingencies @ 15%					513,399
Total					3,936,060

Total Option C relative estimate of probable construction cost = $3,936,060

6.4. Summary Estimate of Probable Construction Costs Summary (based on May 2012 dollars) For Aerobic Digestion

Plant Capacity	Estimate of Probable Construction Costs
1.3 MGD	$1,461,547
2.6 MGD	$2,759,576
3.9 MGD	$3,936,060

7. DIGESTED SLUDGE PUMP STATION SIZING CRITERIA AND ESTIMATES OF PROBABLE CONSTRUCTION COSTS FOR VARIOUS TREATMENT PLANT CAPACITIES

7.1. MGD PLANT CAPACITY – OPTION A

7.1.1. SIZING CRITERIA – AVERAGE FLOW: 1.3 MGD

7.1.2. DIGESTED SLUDGE PUMP STATION PRELIMINARY DESIGN ASSUMPTIONS

- Assume 1 reinforced concrete slab with total overall dimensions of 16’ L x 12’ W x 1’ T.
- Assume 2 horizontal centrifugal or progressive cavity skid-mounted pumps & motors.
- Assume 6”-8” interconnecting piping, valves, supports and appurtenances.
- Assume electrical & instrumentation systems for power and control.

7.1.3. ESTIMATES OF PROBABLE CONSTRUCTION COSTS

Assumptions:

- Costs based on May 2012 dollars
- Preliminary design and associated cost estimates are based upon the design and construction of a similar 1.3 MGD (approximate) water reclamation facility within the State of California.

DIGESTED SLUDGE PUMP STATION – PROBABLE CONSTRUCTION COSTS

Description	Dimensions/Clarifications	Unit	Quantity	Unit Price	Total Price
General Conditions	Approx. 15% of Total	LS	1	15,311	15,311
Civil					
Earthwork (Excavation, Backfill, & Grading)	Est. Labor & Equipment	CY	120	15	1,800
Site Improvements, Yard Piping & Restoration	Approx. 8% of Total	LS	1	9,250	9,250
Structural (Reinforced Concrete)					
DSL Pump Station SOG	12' x 16' x 1'	CY	8	592	4,736
Structural (Misc. Metals)					
Hose Racks	Est. Labor + Supplier Pricing	EA	2	250	500
Mechanical					
Digested Sludge Pumps & Motors	Est. Labor + Supplier Pricing	EA	2	13,650	27,300
Process Piping, Valves & Supports	Est. Labor + Supplier Pricing	LS	1	20,667	20,667
Electrical & Instrumentation					
E&I Power & Control Systems	Average 17.5% of Total	LS	1	19,500	19,500
Testing, Start-Up & Commissioning	Average 1.25% of Total	LS	1	2,500	2,500

Miscellaneous					
Painting & Coatings	Est. Subcontractor Pricing	LS	1	3,750	3,750
Subtotal					105,314
Contingencies @ 15%					15,797
Total					121,111

Total Option A relative estimate of probable construction costs = $121,111

7.2. 2.6 MGD Plant Capacity – Option B

7.2.1. 7.2.1 Sizing Criteria – Average flow: 2.6 MGD

7.2.2. Digested Sludge Pump Station Preliminary Design Assumptions

- Assume 1 reinforced concrete slab with total overall dimensions of 32’ L x 12’ W x 1’ T.
- Assume 4 horizontal centrifugal or progressive cavity skid-mounted pumps & motors.
- Assume 6”-8” interconnecting piping, valves, supports and appurtenances.
- Assume electrical & instrumentation systems for power and control.

7.2.3. Estimates of Probable Construction Costs

Assumptions:

- Costs based on May 2012 dollars
- Preliminary design and associated cost estimates are based upon the design and construction of a similar 2.6 MGD (approximate) water reclamation facility within the State of California.

DIGESTED SLUDGE PUMP STATION – PROBABLE CONSTRUCTION COSTS

Description	Dimensions	Unit	Quantity	Unit Price	Total Price
General Conditions	Approx. 15% of Total	LS	1	19,311	19,311
Civil					
Earthwork (Excavation, Backfill, & Grading)	Est. Labor & Equipment	CY	240	15	3,600
Site Improvements, Yard Piping & Restoration	Approx. 8% of Total	LS	1	18,500	18,500
Structural (Reinforced Concrete)					
DSL Pump Station SOG	12' x 32' x 1'	CY	16	592	9,472

Structural (Misc. Metals)					
Hose Racks	Est. Labor + Supplier Pricing	EA	4	250	1,000
Mechanical					
Digested Sludge Pumps & Motors	Est. Labor + Supplier Pricing	EA	4	13,650	54,600
Process Piping, Valves & Supports	Est. Labor + Supplier Pricing	LS	2	20,667	41,334
Electrical & Instrumentation					
E&I Power & Control Systems	Average 17.5% of Total	LS	1	39,000	39,000
Testing, Start-Up & Commissioning	Average 1.25% of Total	LS	1	5,000	5,000
Miscellaneous					
Painting & Coatings	Est. Subcontractor Pricing	LS	1	7,500	7,500
Subtotal					199,317
Contingencies @ 15%					29,898
Total					229,215

Total Option B relative estimate of probable construction cost = $229,215

7.3. 3.9 MGD Plant Capacity – Option C

7.3.1. Sizing Criteria – Average flow: 3.9 MGD

7.3.2. Digested Sludge Pump Station Preliminary Design Assumptions

- Assume 1 reinforced concrete slab with total overall dimensions of 48’ L x 12’ W x 1’ T.
- Assume 6 horizontal centrifugal or progressive cavity skid-mounted pumps & motors.
- Assume 6”-8” interconnecting piping, valves, supports and appurtenances.
- Assume electrical & instrumentation systems for power and control.

7.3.3. Estimates of Probable Construction Costs

Assumptions:

- Costs based on May 2012 dollars
- Preliminary design and associated cost estimates are based upon the design and construction of a similar 3.9 MGD (approximate) water reclamation facility within the State of California.

DIGESTED SLUDGE PUMP STATION – PROBABLE CONSTRUCTION COSTS

Description	Dimensions	Unit	Quantity	Unit Price	Total Price
General Conditions	Approx. 15% of Total	LS	1	24,311	24,311
Civil					
Earthwork (Excavation, Backfill, & Grading)	Est. Labor & Equipment	CY	360	15	5,400
Site Improvements, Yard Piping & Restoration	Approx. 8% of Total	LS	1	27,000	27,000
Structural (Reinforced Concrete)					
DSL Pump Station SOG	12' x 48' x 1'	CY	24	592	14,208
Structural (Misc. Metals)					
Hose Racks	Est. Labor + Supplier Pricing	EA	6	250	1,500
Mechanical					
Digested Sludge Pumps & Motors	Est. Labor + Supplier Pricing	EA	6	13,650	81,900
Process Piping, Valves & Supports	Est. Labor + Supplier Pricing	LS	3	20,667	62,001
Electrical & Instrumentation					
E&I Power & Control Systems	Average 17.5% of Total	LS	1	53,000	53,000
Testing, Start-Up & Commissioning	Average 1.25% of Total	LS	1	7,500	7,500
Miscellaneous					
Painting & Coatings	Est. Subcontractor Pricing	LS	1	11,250	11,250
Subtotal					288,070
Contingencies @ 15%					43,211
Total					331,281

Total Option C relative estimate of probable construction cost = $331,281

7.4. SUMMARY ESTIMATE OF PROBABLE CONSTRUCTION COSTS SUMMARY (BASED ON MAY 2012 DOLLARS) FOR DIGESTED SLUDGE PUMP STATION

Plant Capacity	Estimate of Probable Construction Costs
1.3 MGD	$121,111
2.6 MGD	$229,215
3.9 MGD	$331,281

8. SCUM PUMP STATION SIZING CRITERIA AND ESTIMATES OF PROBABLE CONSTRUCTION COSTS FOR VARIOUS TREATMENT PLANT CAPACITIES

8.1. 1.3 MGD PLANT CAPACITY – OPTION A

8.1.1. SIZING CRITERIA – AVERAGE FLOW: 1.3 MGD

No Scum Pump Station improvements are required for Option A. The existing facility remains in operation in its current size and condition.

8.2. 2.6 MGD PLANT CAPACITY – OPTION B

8.2.1. SIZING CRITERIA – AVERAGE FLOW: 2.6 MGD

8.2.2. SCUM PUMP STATION PRELIMINARY DESIGN ASSUMPTIONS

- Assume 1 reinforced concrete scum box with total overall dimensions of 19’ L x 12’ W x 15’ D.
- Assume 1 reinforced concrete slab with total overall dimensions of 19’ L x 12’ W x 1.5’ T.
- Assume 2 horizontal centrifugal or progressive cavity skid-mounted pumps & motors.
- Assume 6”-8” interconnecting piping, valves, supports and appurtenances.
- Assume electrical & instrumentation systems for power and control.

8.2.3. ESTIMATES OF PROBABLE CONSTRUCTION COSTS

Assumptions:

- Costs based on May 2012 dollars
- Preliminary design and associated cost estimates are based upon the design and construction of a similar 2.6 MGD (approximate) water reclamation facility within the State of California.

SCUM PUMP STATION – PROBABLE CONSTRUCTION COSTS

Description	Dimensions/Clarifications	Unit	Quantity	Unit Price	Total Price
General Conditions	Approx. 15% of Total	LS	1	23,455	23,455
Civil					
Earthwork (Excavation, Backfill, & Grading)	Est. Labor & Equipment	CY	125	15	1,875
Site Improvements, Yard Piping & Restoration	Approx. 8% of Total	LS	1	13,240	13,240
Structural (Reinforced Concrete)					
Scum Box SOG	12' x 19' x 1.5'	CY	14	526	7,364
Scum Box Walls	43' x 15' x 1'	CY	25	1,014	25,350
Scum Pump Station SOG	10' x 11.17' x 1'	CY	5	674	3,370
Structural (Misc. Metals)					

FRP Grating & Supports	Est. Labor + Supplier Pricing	SF	150	44	6,600
Galv Ladder & Supports	Est. Labor + Supplier Pricing	EA	1	2,730	2,730
Hose Racks	Est. Labor + Supplier Pricing	EA	1	270	270
Mechanical					
Scum Pumps & Motors	Est. Labor + Supplier Pricing	EA	2	10,635	21,270
Process Piping, Valves & Supports	Est. Labor + Supplier Pricing	LS	1	12,992	12,992
Electrical & Instrumentation					
E&I Power & Control Systems	Average 17.5% of Total	LS	1	26,450	26,450
Testing, Start-Up & Commissioning	Average 1.25% of Total	LS	1	2,000	2,000
Miscellaneous					
Painting & Coatings	Est. Subcontractor Pricing	LS	1	3,750	3,750
Subtotal					150,716
Contingencies @ 15%					22,607
Total					173,323

Total Option B relative estimate of probable construction costs = $173,323

8.3. 3.9 MGD Plant Capacity – Option C

8.3.1. Sizing Criteria – Average flow: 3.9 MGD

No additional scum pumping facility requirements are considered necessary for Option C above those identified under Option B.

8.4. Summary of Probable Construction Costs Summary (based on May 2012 dollars) For Scum Pump Station

Plant Capacity	Estimate of Probable Construction Costs
1.3 MGD	No Improvements Required
2.6 MGD	$173,323
3.9 MGD	$173,323

9. Effluent Pump Station Sizing Criteria and Estimates of Probable Construction Costs for Various Treatment Plant Capacities

9.1. 1.3 MGD Plant Capacity – Option A

9.1.1. Sizing Criteria – Average flow: 1.3 MGD

No Effluent Pump Station improvements are required for Option A. The existing facility remains in operation in its current size and condition.

9.2. 2.6 MGD Plant Capacity – Option B

9.2.1. Sizing Criteria – Average flow: 2.6 MGD

9.2.2. Effluent Pump Station Preliminary Design Assumptions

- Assume 1 reinforced concrete pump station with wetwell inside dimensions of 25’ L x 11’W x 23’-3” HWL.
- Assume 3 vertical turbine pumps and motors.
- Assume 1 slide gate for flow control.
- Assume 12” pump discharge piping into a 12” discharge manifold complete with piping, valves, supports and appurtenances.
- Assume electrical & instrumentation systems for power and control.

9.2.3. Estimates of Probable Construction Costs

Assumptions:

- Costs based on May 2012 dollars
- Preliminary design and associated cost estimates are based upon the design and construction of a similar 2.6 MGD (approximate) water reclamation facility within the State of California.

EFFLUENT PUMP STATION – PROBABLE CONSTRUCTION COSTS

Description	Dimensions/Clarifications	Unit	Quantity	Unit Price	Total Price
General Conditions	Approx. 15% of Total	LS	1	108,545	108,545
Civil					
Earthwork (Excavation, Backfill, & Grading)	Est. Labor & Equipment	CY	1,100	9	9,900
Site Improvements, Yard Piping & Restoration	Approx. 8% of Total	LS	1	62,350	62,350
Structural (Reinforced Concrete)					
EPS SOG	13' x 27' x 1.5'	CY	21	541	11,361
EPS Walls (Lower Half)	72' x 12.5' x 1.5'	CY	53	814	43,142
EPS Walls (Upper Half)	72' x 12.5' x 1.5'	CY	53	814	43,142
EPS Interior Baffle Walls	6' x 6' x 6"	CY	2	1,420	2,840
EPS Interior Chamber Wall	9' x 22.5' x 1'	CY	8	999	7,992
EPS Deck Slab & Beams	11' x 25' x 1'	CY	11	1,494	16,434
Misc. - Hydrotest Tanks & Dewater	Est. Labor & Equipment	LS	1	5,000	5,000
Structural (Misc. Metals)					

FRP Grating & Supports	Est. Labor + Supplier Pricing	SF	12	58	696
Aluminum Handrail	Est. Labor + Supplier Pricing	LF	100	55	5,500
Stairs	Est. Labor + Supplier Pricing	EA	1	5,205	5,205
Hose Racks	Est. Labor + Supplier Pricing	EA	1	210	210
Precast Vault & Hatch	Est. Labor + Supplier Pricing	EA	1	6,210	6,210
Mechanical					
Vertical Turbine Pumps & Motors	Est. Labor + Supplier Pricing	EA	3	62,865	188,595
Aluminum Slide Gates, Frames & Operators	Est. Labor + Supplier Pricing	EA	1	9,915	9,915
Process Piping, Valves & Supports	Est. Labor + Supplier Pricing	LS	1	23,106	23,106
Electrical & Instrumentation					
E&I Power & Control Systems	Average 17.5% of Total	LS	1	110,230	110,230
Testing, Start-Up & Commissioning	Average 1.25% of Total	LS	1	10,000	10,000
Miscellaneous					
Painting & Coatings	Est. Subcontractor Pricing	LS	1	15,000	15,000
Subtotal					685,373
Contingencies @ 15%					102,806
Total					788,179

Total Option B relative estimate of probable construction costs = $788,179

9.3. 3.9 MGD Plant Capacity – Option C

9.3.1. Sizing Criteria – Average flow: 3.9 MGD

9.3.2. Effluent Pump Station Preliminary Design Assumptions

- Assume 1 reinforced concrete pump station with wetwell inside dimensions of 50’ L x 11’W x 23’-3” HWL.
- Assume 6 vertical turbine pumps and motors.
- Assume 1 slide gate for flow control.
- Assume 12” pump discharge piping into a 16” discharge manifold complete with piping, valves, supports and appurtenances.
- Assume electrical & instrumentation systems for power and control.

9.3.3. Estimates of Probable Construction Costs

Assumptions:

- Costs based on May 2012 dollars

- Preliminary design and associated cost estimates are based upon the design and construction of a similar 3.9 MGD (approximate) water reclamation facility within the State of California.

EFFLUENT PUMP STATION – PROBABLE CONSTRUCTION COSTS

Description	Dimensions	Unit	Quantity	Unit Price	Total Price
General Conditions	Approx. 15% of Total	LS	1	175,550	175,550
Civil					
Earthwork (Excavation, Backfill, & Grading)	Est. Labor & Equipment	CY	2,200	9	19,800
Site Improvements, Yard Piping & Restoration	Approx. 8% of Total	LS	1	125,000	125,000
Structural (Reinforced Concrete)					
EPS SOG	13' x 54' x 1.5'	CY	42	541	22,722
EPS Walls (Lower Half)	122' x 12.5' x 1.5'	CY	106	814	86,284
EPS Walls (Upper Half)	122' x 12.5' x 1.5'	CY	106	814	86,284
EPS Interior Baffle Walls	6' x 6' x 6" (2 Each)	CY	4	1,420	5,680
EPS Interior Chamber Wall	9' x 22.5' x 1' (2 Each)	CY	16	999	15,984
EPS Deck Slab & Beams	11' x 50' x 1'	CY	22	1,494	32,868
Misc. - Hydrotest Tanks & Dewater	Est. Labor & Equipment	LS	1	10,000	10,000
Structural (Misc. Metals)					
FRP Grating & Supports	Est. Labor + Supplier Pricing	SF	24	58	1,392
Aluminum Handrail	Est. Labor + Supplier Pricing	LF	200	55	11,000
Stairs	Est. Labor + Supplier Pricing	EA	2	5,205	10,410
Hose Racks	Est. Labor + Supplier Pricing	EA	2	210	420
Precast Vault & Hatch	Est. Labor + Supplier Pricing	EA	2	6,210	12,420
Mechanical					
Vertical Turbine Pumps & Motors	Est. Labor + Supplier Pricing	EA	6	62,865	377,190
Aluminum Slide Gates, Frames & Operators	Est. Labor + Supplier Pricing	EA	2	9,915	19,830
Process Piping, Valves & Supports	Est. Labor + Supplier Pricing	LS	1	46,212	46,212
Electrical & Instrumentation					
E&I Power & Control Systems	Average 17.5% of Total	LS	1	232,000	232,000
Testing, Start-Up & Commissioning	Average 1.25% of Total	LS	1	20,000	20,000

Miscellaneous					
Painting & Coatings	Est. Subcontractor Pricing	LS	1	30,000	30,000
Subtotal					1,341,046
Contingencies @ 15%					201,157
Total					1,542,203

Total Option C relative estimate of probable construction cost = $1,542,203

9.4. ESTIMATE OF PROBABLE CONSTRUCTION COSTS SUMMARY (BASED ON MAY 2012 DOLLARS) FOR EFFLUENT PUMP STATION

Plant Capacity	Estimate of Probable Construction Costs
1.3 MGD	No Improvements Required
2.6 MGD	$788,179
3.9 MGD	$1,542,203

10. ADMINISTRATION BUILDING SIZING CRITERIA AND ESTIMATES OF PROBABLE CONSTRUCTION COSTS FOR VARIOUS TREATMENT PLANT CAPACITIES

10.1. 1.3 MGD PLANT CAPACITY – OPTION A

10.1.1. SIZING CRITERIA – AVERAGE FLOW: 1.3 MGD

No Administration Building improvements are required for Option A. The existing facility remains in operation in its current size and condition.

10.2. 2.6 MGD PLANT CAPACITY – OPTION B

10.2.1. SIZING CRITERIA – AVERAGE FLOW: 2.6 MGD

No Administration Building improvements are required for Option B. The existing facility remains in operation in its current size and condition.

10.3. 3.9 MGD PLANT CAPACITY – OPTION C

10.3.1. SIZING CRITERIA – AVERAGE FLOW: 3.9 MGD

10.3.2. ADMINISTRATION BUILDING PRELIMINARY DESIGN ASSUMPTIONS

- Assume 1 single-story masonry and wood framed structure with outside dimensions of 104’ L x 42’W (4,368 square feet).
- Assume reinforced concrete slab on grade.
- Assume fully-grouted split-face masonry (CMU) exterior walls.
- Assume wood roof trusses with insulation and standing seam metal roofing system.
- Assume multi-use floor plan with offices, lab, break room, rest rooms, hallways and shop/garage.

- Assume exterior hollow metal doors, frames and finish hardware.
- Assume interior wood doors, frames and finish hardware.
- Assume exterior aluminum frame windows with interior window coverings.
- Assume interior vinyl flooring.
- Assume ceramic tile rest rooms complete with toilet partitions and accessories.
- Assume laboratory with cabinetry and lab equipment.
- Assume interior metal stud partition walls with drywall, tape, texture, and painted finish.
- Assume fire sprinkler system throughout.
- Assume HVAC system throughout.
- Assume plumbing system throughout.
- Assume fire and security alarm systems throughout.
- Assume electrical & instrumentation systems for power, lighting and control.
- Assume ADA compliance for the entire building.

10.3.3. ESTIMATES OF PROBABLE CONSTRUCTION COSTS

Assumptions:

- Costs based on May 2012 dollars
- Preliminary design and associated cost estimates are based upon the design and construction of a similar 3.9 MGD (approximate) water reclamation facility within the State of California.

ADMINISTRATION BUILDING – PROBABLE CONSTRUCTION COSTS

Description	Dimensions/Clarifications	Unit	Quantity	Unit Price	Total Price
General Conditions	Approx. 15% of Total	LS	1	135,471	135,471
Civil					
Demolish & Dispose of Existing Admin. Bldg.	Future Demo	N/A	0	0	0
Earthwork (Excavation, Backfill, & Grading)	Est. Labor & Equipment	CY	500	9	4,500
Site Improvements, Yard Piping & Restoration	Approx. 8% of Total	LS	1	73,515	73,515
Structural					
Concrete Slab On Grade & Footings	4365 x 6"	CY	85	515	43,775
CMU Masonry Walls	Est. Subcontractor Pricing	SF	3,130	18	56,340
Wood Roof Trusses	Est. Subcontractor Pricing	SF	5,184	8	41,472
Roofing, Insulation & Trim	Est. Subcontractor Pricing	SF	5,184	11	57,024
Hollow Metal Doors, Frames & Hardware	Est. Subcontractor Pricing	EA	5	1,050	5,250
Overhead Roll-up Doors & Operators	Est. Subcontractor Pricing	EA	2	4,500	9,000
Aluminum Windows & Frames	Est. Subcontractor Pricing	EA	10	830	8,300
Louvers & Vents	Est. Subcontractor Pricing	EA	1	450	450

Caulking & Sealants	Est. Subcontractor Pricing	LS	1	2,250	2,250
Painting & Coatings	Est. Subcontractor Pricing	LS	1	7,500	7,500
Architectural					
Misc. Metals	Est. Subcontractor Pricing	LS	1	3,000	3,000
Metal Studs	Est. Subcontractor Pricing	SF	5,100	3	15,300
Drywall, Tape & Texture	Est. Subcontractor Pricing	SF	9,000	2	18,000
Acoustical Ceiling	Est. Subcontractor Pricing	SF	2,164	5	10,820
Building Insulation	Est. Subcontractor Pricing	SF	2,548	2	5,096
Flooring	Est. Subcontractor Pricing	SF	2,548	6	15,288
Interior Doors, Frames & Hardware	Est. Subcontractor Pricing	EA	10	450	4,500
Cabinetry & Countertops	Est. Subcontractor Pricing	LF	32	295	9,440
Lab Equipment & Furnishings	Est. Subcontractor Pricing	LS	1	18,000	18,000
Restroom Ceramic Tile	Est. Subcontractor Pricing	SF	448	8	3,584
Toilet Partitions	Est. Subcontractor Pricing	LF	56	30	1,680
Toilet Accessories	Est. Subcontractor Pricing	LS	1	2,250	2,250
Benches, Shelving & Lockers	Est. Subcontractor Pricing	EA	8	1,300	10,400
Window Coverings	Est. Subcontractor Pricing	SF	176	15	2,640
Caulking & Sealants	Est. Subcontractor Pricing	LS	1	2,250	2,250
Painting & Coatings	Est. Subcontractor Pricing	LS	1	13,026	13,026
ADA Compliance	Est. Subcontractor Pricing	LS	1	2,250	2,250
Signage & Misc. Specialties	Est. Subcontractor Pricing	LS	1	7,500	7,500
Mechanical					
HVAC	Est. Subcontractor Pricing	SF	2,548	15	38,220
Plumbing (Rough & Finish)	Est. Subcontractor Pricing	LS	1	15,000	15,000
Fire Protection & Extinguishers	Est. Subcontractor Pricing	SF	4,368	4	17,472
Electrical & Instrumentation					
E&I Power & Control Systems	Average 17.5% of Total	LS	1	167,540	167,540
Building Lighting & Circuits	Est. Subcontractor Pricing	SF	4,368	11	48,048
Fire Alarms	Est. Subcontractor Pricing	SF	4,368	1	4,368
Security Systems	Est. Subcontractor Pricing	SF	4,368	2	8,736
Communication & Data Systems	Est. Subcontractor Pricing	LS	1	3,000	3,000
Testing, Start-Up & Commissioning	Average 1.25% of Total	LS	1	12,000	12,000
Subtotal					904,255

Contingencies @ 15%	135,638
Total	1,039,893

Total Option C relative estimate of probable construction costs = $1,039,893

10.4. SUMMARY ESTIMATE OF PROBABLE CONSTRUCTION COSTS SUMMARY (BASED ON MAY 2012 DOLLARS) FOR ADMINISTRATION BUILDING

Plant Capacity	Estimate of Probable Construction Costs**
1.3 MGD	No Improvements Required
2.6 MGD	No Improvements Required
3.9 MGD	$1,039,893

11. BLOWER AND ELECTRICAL BUILDING WITH STANDBY POWER GENERATION SIZING CRITERIA AND ESTIMATES OF PROBABLE CONSTRUCTION COSTS FOR VARIOUS TREATMENT PLANT CAPACITIES

11.1. 1.3 MGD PLANT CAPACITY OPTION

11.1.1. SIZING CRITERIA – AVERAGE FLOW: 1.3 MGD

No Blower and Electrical Building improvements are required for Option A. The existing facility remains in operation in its current size and condition.

11.2. 2.6 MGD PLANT CAPACITY – OPTION B

11.2.1. SIZING CRITERIA – AVERAGE FLOW: 2.6 MGD

11.2.2. BLOWER AND ELECTRICAL BUILDING WITH STANDBY POWER GENERATOR PRELIMINARY DESIGN ASSUMPTIONS

- Assume demolition of existing Blower Building.
- Assume relocation and reuse of 2 existing blowers.
- Assume 1 single-story pre-engineered metal building structure with outside dimensions of 90’ L x 34’W (3,060 square feet).
- Assume reinforced concrete slab on grade.
- Assume metal frame wall and roof construction with wall and roof insulation, fluted metal roofing system, and metal trim.
- Assume multi-use floor plan with one blower equipment room and one electrical room.
- Assume exterior and interior hollow metal doors, frames and finish hardware.
- Assume exterior aluminum frame windows.
- Assume no interior flooring (smooth trowel finish concrete).
- Assume fire sprinkler system throughout.
- Assume HVAC system in electrical room only.
- Assume plumbing system for washwater in blower room only.
- Assume fire and security alarm systems throughout.
- Assume 3 multi-stage centrifugal blowers, motors and appurtenances (4 operating and 1 standby with 3 new blowers and 2 relocated blowers).
- Assume 4”-30” interconnecting piping, ductwork, valves, supports and appurtenances.
- Assume 1 skid-mounted 250 kW diesel-fuel standby power generator (exterior install).

- Assume electrical & instrumentation systems for power, lighting and control.

11.2.3. ESTIMATES OF PROBABLE CONSTRUCTION COSTS

Assumptions:

- Costs based on May 2012 dollars
- Preliminary design and associated cost estimates are based upon the design and construction of a similar 2.6 MGD (approximate) water reclamation facility within the State of California.

BLOWER AND ELECTRICAL BUILDING WITH STANDBY POWER GENERATOR – PROBABLE CONSTRUCTION COSTS

Description	Dimensions	Unit	Quantity	Unit Price	Total Price
General Conditions	Approx. 15% of Total	LS	1	312,450	312,450
Civil					
Demolish & Dispose of Existing Blower Bldg.	Est. Labor & Equipment	LS	1	50,000	50,000
Earthwork (Excavation, Backfill, & Grading)	Est. Labor & Equipment	CY	250	9	2,250
Site Improvements, Yard Piping & Restoration	Approx. 8% of Total	LS	1	148,650	148,650
Structural					
Concrete Slab On Grade & Foundations	3090 x 6" + Blower Pads	CY	101	679	68,579
Pre-Engineered Metal Building	Est. Subcontractor Pricing	SF	3,060	45	137,700
Wall Louvers	Est. Subcontractor Pricing	SF	104	45	4,680
Insulation	Est. Subcontractor Pricing	SF	3,060	2	6,120
Hollow Metal Doors, Frames & Hardware	Est. Subcontractor Pricing	EA	4	1,200	4,800
Overhead Roll-up Doors & Operators	Est. Subcontractor Pricing	EA	1	4,500	4,500
Aluminum Windows & Frames	Est. Subcontractor Pricing	EA	4	500	2,000
Louvers & Vents	Est. Subcontractor Pricing	EA	1	500	500
Caulking & Sealants	Est. Subcontractor Pricing	LS	1	1,000	1,000
Painting & Coatings	Est. Subcontractor Pricing	LS	1	15,000	15,000
Concrete Equipment Pads & Foundations	Est. Subcontractor Pricing	LS	1	2,487	2,487
Signage	Est. Subcontractor Pricing	LS	1	1,125	1,125
Mechanical (Process)					
Multi-Stage Centrifugal Blowers	Est. Labor + Supplier Pricing	EA	3	140,885	422,655
Install OFCI Relocated Blowers	Est. Labor + Supplier Pricing	EA	2	15,000	30,000
Process Piping, Valves & Supports	Est. Labor + Supplier Pricing	LS	1	106,185	106,185

Mechanical (Building)					
HVAC	Est. Subcontractor Pricing	SF	600	6	3,600
Fire Protection & Extinguishers	Est. Subcontractor Pricing	SF	3,060	4	12,240
Electrical & Instrumentation					
E&I Power & Control Systems	Average 17.5% of Total	LS	1	317,500	317,500
Lighting	Est. Subcontractor Pricing	SF	3,060	2	6,120
Fire Alarms	Est. Subcontractor Pricing	SF	3,060	1	3,060
Security Systems	Est. Subcontractor Pricing	SF	3,060	2	6,120
250 KW Standby Generator	Est. Labor + Supplier Pricing	EA	1	95,250	95,250
Testing, Start-Up & Commissioning	Average 1.25% of Total	LS	1	20,000	20,000
Subtotal					1,784,571
Contingencies @ 15%					267,686
Total					2,052,257

Total Option B relative estimate of probable construction costs = $2,052,257

11.3. 3.9 MGD Plant Capacity – Option C

11.3.1. Sizing Criteria – Average flow: 3.9 MGD

11.3.2. Blower and Electrical Building with Standby Power Generator Preliminary Design Assumptions

- Assume demolition of existing Blower Building.
- Assume relocation and reuse of two existing blowers.
- Assume 1 single-story pre-engineered metal building structure with outside dimensions of 90’ L x 34’W (3,060 square feet).
- Assume reinforced concrete slab on grade.
- Assume metal frame wall and roof construction with wall and roof insulation, fluted metal roofing system, and metal trim.
- Assume multi-use floor plan with one blower equipment room and one electrical room.
- Assume exterior and interior hollow metal doors, frames and finish hardware.
- Assume exterior aluminum frame windows.
- Assume no interior flooring (smooth trowel finish concrete).
- Assume fire sprinkler system throughout.
- Assume HVAC system in electrical room only.
- Assume plumbing system for washwater in blower room only.
- Assume fire and security alarm systems throughout.
- Assume 5 multi-stage centrifugal blowers, motors and appurtenances (6 operating and 1 standby with 5 new blowers and 2 relocated blowers).
- Assume 4”-30” interconnecting piping, ductwork, valves, supports and appurtenances.
- Assume 1 skid-mounted 250 kW diesel-fuel standby power generator (exterior install).

- Assume electrical & instrumentation systems for power, lighting and control.

11.3.3. ESTIMATES OF PROBABLE CONSTRUCTION COSTS

Assumptions:

- Costs based on May 2012 dollars
- Preliminary design and associated cost estimates are based upon the design and construction of a similar 3.9 MGD (approximate) water reclamation facility within the State of California.

BLOWER AND ELECTRICAL BUILDING WITH STANDBY POWER GENERATOR – PROBABLE CONSTRUCTION COSTS

Description	Dimensions	Unit	Quantity	Unit Price	Total Price
General Conditions	Approx. 15% of Total	LS	1	312,450	312,450
Civil					
Demolish & Dispose of Existing Blower Bldg.	Est. Labor & Equipment	LS	1	50,000	50,000
Earthwork (Excavation, Backfill, & Grading)	Est. Labor & Equipment	CY	250	9	2,250
Site Improvements, Yard Piping & Restoration	Approx. 8% of Total	LS	1	148,650	148,650
Structural					
Concrete Slab On Grade & Foundations	3090 x 6" + Blower Pads	CY	101	679	68,579
Pre-Engineered Metal Building	Est. Subcontractor Pricing	SF	3,060	45	137,700
Wall Louvers	Est. Subcontractor Pricing	SF	104	45	4,680
Insulation	Est. Subcontractor Pricing	SF	3,060	2	6,120
Hollow Metal Doors, Frames & Hardware	Est. Subcontractor Pricing	EA	4	1,200	4,800
Overhead Roll-up Doors & Operators	Est. Subcontractor Pricing	EA	1	4,500	4,500
Aluminum Windows & Frames	Est. Subcontractor Pricing	EA	4	500	2,000
Louvers & Vents	Est. Subcontractor Pricing	EA	1	500	500
Caulking & Sealants	Est. Subcontractor Pricing	LS	1	1,000	1,000
Painting & Coatings	Est. Subcontractor Pricing	LS	1	15,000	15,000
Concrete Equipment Pads & Foundations	Est. Subcontractor Pricing	LS	1	2,487	2,487
Signage	Est. Subcontractor Pricing	LS	1	1,125	1,125
Mechanical (Process)					
Multi-Stage Centrifugal Blowers	Est. Labor + Supplier Pricing	EA	5	140,885	704,425
Install OFCI Relocated Blowers	Est. Labor + Supplier Pricing	EA	2	15,000	30,000
Process Piping, Valves & Supports	Est. Labor + Supplier Pricing	LS	1	146,185	146,185

Mechanical (Building)					
HVAC	Est. Subcontractor Pricing	SF	600	6	3,600
Fire Protection & Extinguishers	Est. Subcontractor Pricing	SF	3,060	4	12,240
Electrical & Instrumentation					
E&I Power & Control Systems	Average 17.5% of Total	LS	1	374,527	374,527
Lighting	Est. Subcontractor Pricing	SF	3,060	2	6,120
Fire Alarms	Est. Subcontractor Pricing	SF	3,060	1	3,060
Security Systems	Est. Subcontractor Pricing	SF	3,060	2	6,120
250 KW Standby Generator	Est. Labor + Supplier Pricing	EA	1	95,250	95,250
Testing, Start-Up & Commissioning	Average 1.25% of Total	LS	1	20,000	20,000
Subtotal					2,163,368
Contingencies @ 15%					324,505
Total					2,487,873

Total Option C relative estimate of probable construction cost = $2,487,873

11.4. Summary Estimate of Probable Construction Costs Summary (based on May 2012 dollars) For Blower and Electrical Building with Standby Power Generator

Plant Capacity	Estimate of Probable Construction Costs
1.3 MGD	No Improvements Required
2.6 MGD	$2,052,257
3.9 MGD	$2,487,873

12. WAS Thickening Sizing Criteria and Estimates of Probable Construction Cost for Various Treatment Plant Capacities

12.1. 1.3 MGD Plant Capacity – Option A

12.1.1. Sizing Criteria – Average flow: 1.3 MGD

- Secondary sludge production at 1.3 MGD Capacity
- Reference JSME November 12, 1989 *Preliminary Design Submittal for Jamacha Basin Water Reclamation Facility Upgrade and Expansion Project*
- Pounds WAS total solids per day = 2,730 lbs TSS/day
- Gallons per day (assume RAS @ 0.50% TSS) = 64,800 GPD
- Gallons per minute (assume 24 hour/day operation) = 45 GPM

DAF Thickener Sizing Criteria

- Maximum Hydraulic Loading: 0.50 GPM/SF

- Maximum Solids Loading: 1.3 lbs TSS/hr-SF
- Minimum Float Solids: 4.0 %TS
- Minimum SS Capture: 97%
- Maximum Polymer Dose: 5 dry lbs/dry ton TSS

NUMBER AND SIZE OF DAF UNITS

- Number: 1
- Length: 13'-2"
- Width: 7'-10"
- Effective surface area: 103 SF

CHECK LOADINGS VERSUS SIZING CRITERIA

- Hydraulic Loading: 0.43 GPM/SF OK
- Solids Loading: 0.90 lbs TSS/hr-SF OK

12.1.2. ESTIMATES OF PROBABLE CONSTRUCTION COSTS

Assumptions:

- Costs based on May 2012 dollars
- Preliminary design and associated cost estimates are based upon the design and construction of a similar 1.3 MGD (approximate) water reclamation facility within the State of California.

WAS THICKENING – PROBABLE CONSTRUCTION COSTS

Description	Dimensions/Clarifications	Unit	Quantity	Unit Price	Total Price
General Conditions	Approx. 15% of Total	LS	1	95,000	95,000
Civil					
Earthwork (Excavation, Backfill, & Grading)	Est. Labor & Equipment	CY	390	9	3,510
Site Improvements, Yard Piping & Restoration	Approx. 8% of Total	LS	1	56,000	56,000
Structural (Reinforced Concrete)					
18" SOG	25' x 19' x 1.5'	CY	27	850	22,950
Structural (Misc. Metals)					
Misc. Metals & Fabrications	Est. Labor + Supplier Pricing	LS	1	3,500	3,500
Mechanical					
DAF Equipment	Est. Labor + Supplier Pricing	EA	1	405,000	405,000
Electrical & Instrumentation					

E&I Power & Control Systems	Average 17.5% of Total	LS	1	115,000	115,000
Testing, Start-Up & Commissioning	Average 1.25% of Total	LS	1	14,000	14,000
Miscellaneous					
Painting & Coatings	Est. Subcontractor Pricing	LS	1	22,000	22,000
Subtotal					736,960
Contingencies @ 15%					110,544
Total					847,504

Total Option A relative estimate of probable construction cost = $847,504

12.2. 2.6 MGD Plant Capacity – Option B

12.2.1. Sizing Criteria – Average flow: 2.6 MGD

- Secondary sludge production at 2.6 MGD Capacity
- Reference JSME November 12, 1989 *Preliminary Design Submittal for Jamacha Basin Water Reclamation Facility Upgrade and Expansion Project (submittal based on 1.3 MGD ADF and projected for 2.6 MGD ADF herein)*
- Pounds WAS total solids per day = 5,460 lbs TSS/day
- Gallons per day (assume RAS @ 0.50% TSS) = 129,600 GPD
- Gallons per minute (assume 24 hour/day operation) = 90 GPM

DAF Thickener Sizing Criteria

- Maximum Hydraulic Loading: 0.50 GPM/SF
- Maximum Solids Loading: 1.3 lbs TSS/hr-SF
- Minimum Float Solids: 4.0 %TS
- Minimum SS Capture: 97%
- Maximum Polymer Dose: 5 dry lbs/dry ton TSS

Number and Size of DAF Units

- Number: 2
- Length: 13’-2”
- Width: 7’-10”
- Effective surface area: 103 SF

Check Loadings versus Sizing Criteria

- Hydraulic Loading: 0.43 GPM/SF OK
- Solids Loading: 0.90 lbs TSS/hr-SF OK

12.2.2. Estimates of Probable Construction Costs

Assumptions:

- Costs based on May 2012 dollars

- Preliminary design and associated cost estimates are based upon the design and construction of a similar 2.6 MGD (approximate) water reclamation facility within the State of California.

WAS THICKENING – PROBABLE CONSTRUCTION COSTS

Description	Dimensions	Unit	Quantity	Unit Price	Total Price
General Conditions	Approx. 15% of Total	LS	1	120,000	120,000
Civil					
Earthwork (Excavation, Backfill, & Grading)	Est. Labor & Equipment	CY	780	9	7,020
Site Improvements, Yard Piping & Restoration	Approx. 8% of Total	LS	1	75,000	75,000
Structural (Reinforced Concrete)					
18" SOG (2 Each)	25' x 19' x 1.5'	CY	54	850	45,900
Structural (Misc. Metals)					
Misc. Metals & Fabrications	Est. Labor + Supplier Pricing	LS	2	3,500	7,000
Mechanical					
DAF Equipment	Est. Labor + Supplier Pricing	EA	2	405,000	810,000
Electrical & Instrumentation					
E&I Power & Control Systems	Average 17.5% of Total	LS	1	236,000	236,000
Testing, Start-Up & Commissioning	Average 1.25% of Total	LS	1	28,000	28,000
Miscellaneous					
Painting & Coatings	Est. Subcontractor Pricing	LS	1	44,000	44,000
Subtotal					1,372,920
Contingencies @ 15%					205,938
Total					1,578,858

Total Option B relative estimate of probable construction cost = $1,578,858

12.3. 3.9 MGD Plant Capacity – Option C

12.3.1. Sizing Criteria – Average flow: 3.9 MGD

- Secondary sludge production at 3.9 MGD Capacity

- Reference JSME November 12, 1989 *Preliminary Design Submittal for Jamacha Basin Water Reclamation Facility Upgrade and Expansion Project(submittal based on 1.3 MGD ADF and projected for 3.9 MGD ADF herein)*
- Pounds WAS total solids per day = 8,190 lbs TSS/day
- Gallons per day (assume RAS @ 0.50% TSS) = 194,400 GPD
- Gallons per minute (assume 24 hour/day operation) = 135 GPM

DAF Thickener Sizing Criteria

- Maximum Hydraulic Loading: 0.50 GPM/SF
- Maximum Solids Loading: 1.3 lbs TSS/hr-SF
- Minimum Float Solids: 4.0 %TS
- Minimum SS Capture: 97%
- Maximum Polymer Dose: 5 dry lbs/dry ton TSS

NUMBER AND SIZE OF DAF UNITS

- Number: 3
- Length: 13'-2"
- Width: 7'-10"
- Effective surface area: 103 SF

CHECK LOADINGS VERSUS SIZING CRITERIA

- Hydraulic Loading: 0.43 GPM/SF OK
- Solids Loading: 0.90 lbs TSS/hr-SF OK

12.3.2. ESTIMATES OF PROBABLE CONSTRUCTION COSTS

Assumptions:

- Costs based on May 2012 dollars
- Preliminary design and associated cost estimates are based upon the design and construction of a similar 3.9 MGD (approximate) water reclamation facility within the State of California.

WAS THICKENING – PROBABLE CONSTRUCTION COSTS

Description	Dimensions	Unit	Quantity	Unit Price	Total Price
General Conditions	Approx. 15% of Total	LS	1	150,000	150,000
Civil					
Earthwork (Excavation, Backfill, & Grading)	Est. Labor & Equipment	CY	1,170	9	10,530
Site Improvements, Yard Piping & Restoration	Approx. 8% of Total	LS	1	105,000	105,000
Structural (Reinforced Concrete)					
18" SOG (3 Each)	25' x 19' x 1.5'	CY	81	850	68,850

Structural (Misc. Metals)					
Misc. Metals & Fabrications	Est. Labor + Supplier Pricing	LS	1	10,500	10,500
Mechanical					
DAF Equipment	Est. Labor + Supplier Pricing	EA	3	405,000	1,215,000
Electrical & Instrumentation					
E&I Power & Control Systems	Average 17.5% of Total	LS	1	354,000	354,000
Testing, Start-Up & Commissioning	Average 1.25% of Total	LS	1	28,000	28,000
Miscellaneous					
Painting & Coatings	Est. Subcontractor Pricing	LS	1	66,000	66,000
Subtotal					2,007,880
Contingencies @ 15%					301,182
Total					2,309,062

Total Option C relative estimate of probable construction cost = $2,309,062

12.4. SUMMARY ESTIMATE OF PROBABLE CONSTRUCTION COSTS SUMMARY (BASED ON MAY 2012 DOLLARS) FOR WAS THICKENING

Plant Capacity	Estimate of Probable Construction Costs
1.3 MGD	$847,504
2.6 MGD	$1,578,858
3.9 MGD	$2,309,062

13. SLUDGE DEWATERING CENTRIFUGE SIZING CRITERIA AND ESTIMATES OF PROBABLE CONSTRUCTION COSTS FOR VARIOUS TREATMENT OPTIONS

13.1. 1.3 MGD PLANT CAPACITY – OPTION A

13.1.1. SIZING CRITERIA – AVERAGE FLOW: 1.3 MGD

- Digested sludge production at 1.3 MGD Capacity
- Reference JSME November 12, 1989 *Preliminary Design Submittal for Jamacha Basin Water Reclamation Facility Upgrade and Expansion Project (parameters for 2.6 MGD and 3.9 MGD options projected base on preliminary design at 1.3 MGD ADF)*
- Pounds TWAS total solids per day = 2,730 lbs TSS/day
- Gallons TWAS per day (assume TWAS @ 4.0% TSS) = 8,100 GPD

- Digested sludge total solids per day (assume 35% TSS reduction via aerobic digestion) = 1,775 lbs TSS/day
- Centrifuge Loading and Performance Criteria
- Operate 6 hours/day (assumes 1 hour per day for start-up and 1 hour/day for shut down)
- Hydraulic loading = 8,100/(6 x 60) = 23 GPM
- Total solids loading = 1,775 lbs/6 hours = 296 lbs/hour
- Cake solids = 20% TS minimum
- Solids capture = 95% minimum
- Polymer dose = 25 dry lbs/dry ton TSS maximum

13.1.2. Sludge Dewatering Centrifuge Preliminary Design Assumptions

- Number: 1
- Manufacture: Alfa Laval
- Model: ALDEC G2-45
- Assume centrifuge installed on new above ground steel covered structure
- Assume one centrifuge to be installed
- Assume electrical & instrumentation systems for power and control.

13.1.3. Estimates of Probable Construction Costs

Assumptions:

- Costs based on May 2012 dollars
- Preliminary design and associated cost estimates are based upon the design and construction of a similar 1.3 MGD (approximate) water reclamation facility within the State of California.

SLUDGE DEWATERING CENTRIFUGE – PROBABLE CONSTRUCTION COSTS

Description	Dimensions/Clarifications	Unit	Quantity	Unit Price	Total Price
General Conditions	Approx. 15% of Total	LS	1	105,000	105,000
Civil					
Earthwork (Excavation, Backfill, & Grading)	Est. Labor & Equipment	CY	50	9	450
Site Improvements, Yard Piping & Restoration	Approx. 8% of Total	LS	1	45,000	45,000
Structural (Reinforced Concrete)					
Misc. / Footings	Misc.	CY	2	850	1,700
Structural (Misc. Metals)					
Cover & Support Structure	Est. Labor + Supplier Pricing	LS	1	96,300	96,300
Mechanical					

Centrifuge Equipment	Est. Labor + Supplier Pricing	EA	1	418,000	418,000
Electrical & Instrumentation					
E&I Power & Control Systems	Average 17.5% of Total	LS	1	107,600	107,600
Testing, Start-Up & Commissioning	Average 1.25% of Total	LS	1	11,000	11,000
Miscellaneous					
Painting & Coatings	Est. Subcontractor Pricing	LS	1	11,000	11,000
Subtotal					796,050
Contingencies @ 15%					119,408
Total					915,458

Total Option A relative estimate of probable construction cost = $915,458

13.2. 2.6 MGD Plant Capacity – Option B

13.2.1. Sizing Criteria – Average flow: 2.6 MGD

Selected Alfa Laval ALDEC G2-45 Centrifuge is sized for an upper operating range of 50 GPM. Under the 2.6 MGD scenario the daily digested sludge volume will be 8,200 GPD and the centrifuge will be loaded at 46 GPM over a 6 hour operating period. No additional improvements are required beyond the installation of one centrifuge.

Total Option B relative estimate of probable construction cost = $915,458

13.3. 3.9 MGD Plant Capacity – Option C

13.3.1. Sizing Criteria – Average flow: 3.9 MGD

13.3.2. Sludge Dewatering Centrifuge Preliminary Design Assumptions

- Number: 2
- Manufacture: Alfa Laval
- Model: ALDEC G2-45
- Assume centrifuges installed on new above ground steel covered structures
- Assume two centrifuges to be installed
- Assume electrical & instrumentation systems for power and control.

13.3.3. Estimates of Probable Construction Costs

Assumptions:

- Costs based on May 2012 dollars
- Centrifuge installed on new above ground steel covered structure

- Preliminary design and associated cost estimates are based upon the design and construction of a similar 3.9 MGD (approximate) water reclamation facility within the State of California.

SLUDGE DEWATERING CENTRIFUGE – PROBABLE CONSTRUCTION COSTS

Description	Dimensions	Unit	Quantity	Unit Price	Total Price
General Conditions	Approx. 15% of Total	LS	1	105,000	105,000
Civil					
Earthwork (Excavation, Backfill, & Grading)	Est. Labor & Equipment	CY	100	9	900
Site Improvements, Yard Piping & Restoration	Approx. 8% of Total	LS	1	75,000	75,000
Structural (Reinforced Concrete)					
Misc. / Footings	Misc.	CY	4	850	3,400
Structural (Misc. Metals)					
Cover & Support Structure	Est. Labor + Supplier Pricing	LS	2	96,300	192,600
Mechanical					
Centrifuge Equipment	Est. Labor + Supplier Pricing	EA	2	418,000	836,000
Electrical & Instrumentation					
E&I Power & Control Systems	Average 17.5% of Total	LS	1	263,000	263,000
Testing, Start-Up & Commissioning	Average 1.25% of Total	LS	1	22,000	22,000
Miscellaneous					
Painting & Coatings	Est. Subcontractor Pricing	LS	1	22,000	22,000
Subtotal					1,519,900
Contingencies @ 15%					227,985
Total					1,747,885

Total Option C relative estimate of probable construction cost = $1,747,885

13.4. Summary Estimate of Probable Construction Costs Summary (based on May 2012 dollars) For Centrifuge Dewatering

Plant Capacity	Estimate of Probable Construction Costs
1.3 MGD	$915,458
2.6 MGD	$915,458
3.9 MGD	$1,747,885

14. Tertiary Filter Sizing Criteria and Estimates of Probable Construction Costs for Various Treatment Plant Capacities

14.1. Basis of Cost Estimates for Tertiary Filtration Improvements

- Use ARCADIS / Malcolm Pirnie's cost estimates for the recently completed Fallbrook WRP 1 Capital Improvement Plan.
- Fallbrook estimates are based on November 2010 dollars
- Fallbrook estimates are based on ADWF of 2.7 MGD and 2.9 MGD ADWF + recycle flows
- Prorate Fallbrook estimates for inflation at 3.5% per year from November 2010 to May 2012. Inflation factor is 1.053
- Prorate Fallbrook estimates for capacity/size adjustments
- For 1.3 MGD Option A scenario, no additional capacity is required
- For 2.6 MGD Option B scenario use additional capacity/size adjustment factor of 0.481 (1.3/2.7)
- For 3.9 MGD Option C scenario use additional capacity/size adjustment factor of 0.963 (2.6/2.7)
- Given the conservative loading rates established for this assessment, it is assumed that filter effluent requirements can be met without the addition of upstream coagulants.

14.2. Baseline Improvements to Establish Options A, B, and C Cost Estimates

Use basis of cost for Fallbrook WRP 1 Estimates of Probable Construction Costs (based on November 2010 dollars)

14.2.1. Sizing Criteria

- Ultimate average flow: 2.7 MGD
- Ultimate average flow + Recycle: 2.9 MGD
- Maximum Hydraulic Loading Rate (with one unit out of service) @ Q AVG + Recycle: 4.0 GPM/SF

Number and Size of Filters Identified by ARCADIS / Malcolm Pirnie for Fallbrook WRP 1 Tertiary Filtration

- Number: 4
- Length: 13'
- Width: 13'
- Depth: 14.5'
- Side Wall Freeboard: 3'
- Media Depth: 60"
- Media Type: Anthracite

- Flocculation channels 7'W X 7'D X 26'L with 2' freeboard
- Mechanical Flocculators 2 units @ 5 Hp each
- Polyblend Units 2 units (1 operating, 1 standby)
- Use chemical totes for polymer

CHECK LOADINGS VERSUS SIZING CRITERIA (WITH ONE UNIT OUT OF SERVICE)

- Overflow Rate (with one unit out of service) @ Q AVG + Recycle: 4.0 GPM/SF OK

14.2.2. ESTIMATES OF PROBABLE CONSTRUCTION COSTS BY ARCADIS MALCOLM PIRNIE FOR FALLBROOK WRD 1 TERTIARY FILTRATION AT A CAPACITY OF 2.7 MGD AVERAGE FLOW

Assumptions:

- Costs based on November 2010 dollars
- Preliminary design and associated cost estimates are based upon the design and construction of a similar water reclamation facility within the State of California.

TERTIARY FILTERS – PROBABLE CONSTRUCTION COSTS FOR 2.7 MGD (November 2010 Dollars)

Description	Dimensions/Clarifications	Unit	Quantity	Unit Price	Total Price
General Conditions	Approx. 15% of Total	LS	1	132,900	132,900
Civil					
Earthwork (Excavation, Backfill, & Grading)	Est. Labor & Equipment	CY	2,500	9	22,500
Site Improvements, Yard Piping & Restoration	Approx. 8% of Total	LS	1	63,500	63,500
Structural (Reinforced Concrete)					
Base SOG Filters	15' x 15' x 2' (4 Each)	CY	67	975	65,325
Walls Filters	56' x 14.5' x 1' (2 Each)	CY	60	975	58,500
Walls Filters	15' x 14.5' x 1' (4 Each)	CY	33	975	32,175
WBW Tank SOG	22' x 22' x 2'	CY	36	975	35,100
WBW Tank Walls	20' x 14.5' x 1.25' (4 Each)	CY	54	975	52,650
Floc Tank SOG	28 x 10' x 2'	CY	21	975	20,475
Floc Tank Walls	(26'+7') x 2 x 9' x 1'	CY	22	975	21,450
Structural (Misc. Metals)					
Misc. Metals & Fabrications	Est. Labor + Supplier Pricing	LS	1	26,600	26,600
Mechanical					
Launders, Weirs & Supports	Est. Labor + Supplier Pricing	EA	1	32,000	32,000
Underdrains	Est. Labor + Supplier Pricing	SF	676	150	101,400
Air Scour Compressors	Est. Labor + Supplier Pricing	EA	2	15,000	30,000
Filter Media	Est. Labor + Supplier Pricing	CY	125	175	21,875
Waste Backwash Pumps	Est. Labor + Supplier Pricing	EA	2	15,000	30,000
Polymer Addition	Est. Labor + Supplier Pricing	EA	2	32,000	64,000
Process Piping, Valves & Supports	Est. Labor + Supplier Pricing	LS	1	110,000	110,000
Electrical & Instrumentation					

E&I Power & Control Systems	Average 17.5% of Total	LS	1	145,000	145,000
Testing, Start-Up & Commissioning	Average 1.25% of Total	LS	1	35,000	35,000
Miscellaneous					
Painting & Coatings	Est. Subcontractor Pricing	LS	1	25,000	25,000
Subtotal					1,125,450
Contingencies @ 15%					152,929
Total					1,278,379

Total relative estimate of probable construction cost for capacity of 2.7 MGD average flow = $1,278,379 (November 2010 dollars)

14.3. Summary of Tertiary Filtration Estimates of Probable Construction Costs (based on May 2012 dollars)

14.3.1. 1.3 MGD Plant Capacity – Option A (Existing Facilities Value)

No Tertiary Filter improvements are required for Option A. The existing facility remains in operation in its current size and condition.

14.3.2. 2.6 MGD Plant Capacity – Option B (Expand From 1.3 MGD to 2.6 MGD)

Determine additional cost for Option B capacity to existing facilities based on the probable estimate for 1.3 MGD expansion.

$1,278,379 X 1.3 / 2.7 (size adjustment) x 1.053 (inflation adjustment) = **$648,138**

14.3.3. 3.9 MGD Plant Capacity – Option C (Expand From 1.3 MGD to 3.9 MGD)

Determine additional cost for Option C capacity to existing facilities based on the probable estimate for 2.6 MGD expansion.

$1,278,379 x 2.6 / 2.7 (size adjustment) x 1.053 (inflation adjustment) = **$1,296,276**

15. Chlorine Contact Tank, Sodium Hypochlorite Storage and Chemical Feed facilities for Tertiary Disinfection

15.1. 1.3 MGD Plant Capacity – Option A

15.1.1. Sizing Criteria – Average flow: 1.3 MGD

No Tertiary Disinfection improvements are required for Option A. The existing facility remains in operation in its current size and condition.

15.2. 2.6 MGD Plant Capacity – Option B

15.2.1. Sizing Criteria – Average flow: 2.6 MGD

15.2.2. Disinfection Preliminary Design Assumptions

- Assume a minimum CT of 450 mg-min/l for Title 22 treatment.
- Provide 90 minute hydraulic detention time in contact tank at peak flowrates. Recognizing that the RWCWRF is a scalping facility, use average flow or 2.6 MGD to be equal to peak process flowrate to disinfection. Assume an additional 15% flow to the process flowrate to consider clean-out volumes, surges, etc. Therefore assume total maximum design flow to chlorination @ 3.0 MGD.
- Contact volume @ 25,065 cu. Ft.
- CCT channel dimensions @ 8 ft wide x 8 ft deep x 390 ft long. Use 3 pass configuration each pass @ 130 ft. long with 2 ft freeboard. Slab with 1 foot extended footings.
- Assume a chlorine dosage of 5 mg/l for effluent disinfection
- Detention time in reclaimed water transmission line not considered for contact time
- Assume 12.5% sodium hypochlorite delivered to site
- Assume continuous RAS chlorination at 1.5 # chlorine/1,000 #s MLVSS
- Assume 12 hr HRT and MLSS of 2,500 mg/l (% MLVSS @ 72%)
- Assume RAS concentration @ 7,500 mg/l
- Volume of sodium hypochlorite/day required for disinfection = 120 gal/day
- Volume of sodium hypochlorite / day required for RAS bulking control = 92 gal/day
- Provide 15 days of sodium hypochlorite storage (Note: half-life of NaOCl solution is approximately 30 days, therefore limit storage to not more than approximately 2 weeks)
- Storage volume = approximately 3,180 gals (use totes for storage)
- Provide duty and standby chemical metering pumps for sodium hypochlorite delivery to disinfection and RAS
- Provide protective canopy over contact tank and chemical feed facilities

15.2.3. Estimates of Probable Construction Costs

Assumptions:

- Costs based on May 2012 dollars
- Preliminary design and associated cost estimates are based upon the design and construction of a similar 2.6 MGD (approximate) water reclamation facility within the State of California.

CHLORINE CONTACT TANK, SODIUM HYPOCHLORITE STORAGE AND CHEMICAL FEED FACILITIES FOR TERTIARY DISINFECTION FACILITIES – PROBABLE CONSTRUCTION COSTS

Description	Dimensions	Unit	Quantity	Unit Price	Total Price
Civil					
Earthwork (Excavation, Backfill, & Grading)	Est. Labor & Equipment	CY	570	9	5,130
Site Improvements, Yard Piping & Restoration	Approx. 8% of Total	LS	1	150,000	150,000
Structural (Reinforced Concrete)					

CCT SOG	132' x 30 x 2' (3 passes)	CY	293	850	249,050
Walls	130' x 10' x 1' (2 Each)	CY	96	975	93,600
Walls	122 x 10' x 1' (2 Each)	CY	90	975	87,750
Walls	28 x 10' x 1' (2 Each)	CY	21	975	20,475
NaOCl Storage and Feed SOG	22' x 22' x 2'	CY	36	975	35,100
NaOCl Storage and Feed Containment Walls	22' x 3' x 1' (4 Each)	CY	10	975	9,750
Structural (Misc. Metals)					
Misc. Metals & Fabrications	Est. Labor + Supplier Pricing	LS	1	20,500	20,500
Structural (Misc. Metals)					
Canopy & Support Structure (3,625 sq. ft.)	Est. Labor + Supplier Pricing	LS	1	180,000	180,000
Mechanical					
Chemical Feed Equipment, piping and misc. valves and instruments	Est. Labor + Supplier Pricing	EA	4	64,000	256,000
Miscellaneous					
Painting & Coatings	Est. Subcontractor Pricing	LS	1	52,000	52,000
Subtotal					1,159,355
Electrical & Instrumentation					
E&I Power & Control Systems	Average 17.5% of Total	LS	1	225,000	306,245
Testing, Start-Up & Commissioning	Average 1.25% of Total	LS	1	8,500	21,875
General Conditions	Average 15% of Total	LS	1	120,410	262,495
Subtotal					1,749,970
Contingencies @ 15%					262,495
Total					2,012,465

Total Option B relative estimate of probable construction cost = $ 2,012,465

15.3. 3.9 MGD Plant Capacity – Option C

15.3.1. Sizing Criteria – Average flow: 3.9 MGD

15.3.2. Disinfection Preliminary Design Assumptions

- Assume a minimum CT of 450 mg-min/l for Title 22 treatment.

- Provide 90 minute hydraulic detention time in contact tank at peak flowrates. Recognizing that the RWCWRF is a scalping facility, use average flow or 3.9 MGD to be equal to peak process flowrate to disinfection. Assume an additional 15% flow to the process flowrate to consider clean-out volumes, surges, etc. Therefore assume total maximum design flow to chlorination @ 4.5 MGD
- Contact volume @ 37, 598 cu. Ft.
- CCT channel dimensions @ 9 ft wide x 9 ft deep x 465 ft long. Use 3 pass configuration each pass @ 155 ft. long with 2 ft freeboard. Slab with 1 foot extended footings.
- Assume a chlorine dosage of 5 mg/l
- Detention time in reclaimed water transmission line not considered for contact time
- Assume 12.5% sodium hypochlorite delivered to site
- Assume continuous RAS chlorination at 1.5 # chlorine/1,000 #s MLVSS
- Assume 12 hr HRT in AS Tanks and MLSS of 2,500 mg/l (% MLVSS @ 72%)
- Assume RAS concentration @ 7,500 mg/l
- Volume of sodium hypochlorite/day required for disinfection = 180 gpd
- Volume of sodium hypochlorite / day required for RAS bulking control = 190 gal/day
- Provide 15 days of sodium hypochlorite storage (Note: half-life of NaOCl solution is approximately 30 days, therefore limit storage to not more than approximately 2 weeks)
- Storage volume = approximately 5,550 gals (use 8 ft diameter FRP tank approximately 20 ft high to provide approximately 5 ft freeboard)
- Provide duty and standby chemical metering pumps for sodium hypochlorite delivery to disinfection and RAS
- Provide protective canopy over contact tank and chemical feed facilities

15.3.3. ESTIMATES OF PROBABLE CONSTRUCTION COSTS

Assumptions:

- Costs based on May 2012 dollars
- Preliminary design and associated cost estimates are based upon the design and construction of a similar 3.9 MGD (approximate) water reclamation facility within the State of California.

CHLORINE CONTACT TANK, SODIUM HYPOCHLORITE STORAGE AND CHEMICAL FEED FACILITIES FOR TERTIARY DISINFECTION – PROBABLE CONSTRUCTION COSTS

Description	Dimensions	Unit	Quantity	Unit Price	Total Price
Civil					
Earthwork (Excavation, Backfill, & Grading)	Est. Labor & Equipment	CY	850	9	7,650
Site Improvements, Yard Piping & Restoration	Approx. 8% of Total	LS	1	175,000	175,000
Structural (Reinforced Concrete)					
CCT SOG	159' x 33' x 2' (3 passes)	CY	389	850	330,650
Walls	155' x 11' x 1' (2 Each)	CY	126	975	122,850
Walls	146 x 11' x 1' (2 Each)	CY	119	975	116,025
Walls	31 x 11' x 1' (2 Each)	CY	26	975	25,350

NaOCl Storage and Feed SOG	22' x 22' x 2'	CY	36	975	35,100
NaOCl Storage and Feed Containment Walls	22' x 3' x 1' (4 Each)	CY	10	975	9,750
Structural (Misc. Metals)					
Misc. Metals & Fabrications	Est. Labor + Supplier Pricing	LS	1	20,500	20,500
Structural (Misc. Metals)					
Canopy & Support Structure (4,225 sq. ft.)	Est. Labor + Supplier Pricing	LS	1	211,250	211,250
Mechanical					
Chemical Feed Equipment, piping and misc. valves and instruments	Est. Labor + Supplier Pricing	EA	2	72,000	144,000
NaOCl Storage tank and Accessories	Est. Labor + Supplier Pricing	EA	1	18,000	18,000
Miscellaneous					
Painting & Coatings	Est. Subcontractor Pricing	LS	1	52,000	52,000
Subtotal					1,268,125
Electrical & Instrumentation					
E&I Power & Control Systems	Average 17.5% of Total	LS	1	140,480	334,976
Testing, Start-Up & Commissioning	Average 1.25% of Total	LS	1	10,035	23,927
General Conditions	Approx. 15% of Total	LS	1	120,410	287,123
Subtotal					1,914,151
Contingencies @ 15%					287,123
Total					2,201,274

Total Option C relative estimate of probable construction cost = $ 2,201,274

15.4. SUMMARY ESTIMATE OF PROBABLE CONSTRUCTION COSTS SUMMARY (BASED ON MAY 2012 DOLLARS) TERTIARY DISINFECTION FACILITIES

Plant Capacity	Estimate of Probable Construction Costs
1.3 MGD	No Improvements Required
2.6 MGD	$ 2,012,465
3.9 MGD	$ 2,201,274

16. OPTION D – DECOMMISSIONING OF RWCWRF AND SBPS - OVERVIEW

16.1. ABANDON EXISTING RWCRWF PRELIMINARY SCOPE OF WORK ASSUMPTIONS

- All facilities to be abandoned are to be removed from service include all wastewater flows, potable water, electrical power, and communications.
- All underground piping and electrical conduits & duct banks are to be abandoned and capped in place.
- All biological solids to be removed and legally disposed of offsite.
- Mechanical and electrical demolition includes complete removal and offsite disposal of all electrical equipment, conduit wire and other appurtenances.
- Structural demolition includes complete removal and offsite disposal of all structures including reinforced concrete below grade structures in their entirety.
- Civil demolition includes complete removal and offsite disposal of all surface improvements including asphalt paving, concrete drainage improvements, landscaping, irrigation and others as required.
- Civil restoration includes importation of soils required to backfill all below grade structural removals plus full site finish grading to ensure positive storm water drainage.
- All demolished materials to be recycled to the greatest extent possible.

16.2. ESTIMATES OF PROBABLE CONSTRUCTION COSTS

Assumptions:

- Costs based on May 2012 dollars
- Preliminary cost estimates are based upon typical abandonment, demolition and decommissioning work performed at similar 1.3 MGD (approximate) water reclamation facilities within the State of California.

EXISTING RWCWRF SITE - TREATMENT PLANT DECOMMISSIONING

DESCRIPTION	EST. COST
DECOMMISSION (TERMINATE) PLANT PROCESS FLOW	
TERMINATE SEWAGE FLOW TO RWCWRF, REDIRECT TO RSDPS - DECOMMISSIONING OF SBPS	50,000
DECOMMISSION UTILITY SERVICES	
SDGE - TERMINATE ELECTRICAL SERVICE TO FACILITY	25,000
SDGE - REMOVE TRANSFORMER(S) AND ANY EXISTING SERVICE MATERIALS	75,000
DISTRICT - TERMINATE POTABLE WATER SERVICE, REMOVE METER	5,000
DISTRICT - TERMINATE TELECOMMUNICATIONS SERVICE	5,000
DECOMMISSIONING REGULATORY ADMINISTRATIVE REQUIREMENTS	
DISTRICT - VERIFY IF ANY REGULATORY FILINGS ARE REQUIRED	TBD
DISTRICT - COMPLETE ANY INTERNAL ACCOUNTING & ADMIN FOR WWTP	TBD
DISTRICT - ANY ADDITIONAL RWCWRF CLOSURE REQUIREMENTS	TBD
OTHER DISTRICT REQUIREMENTS FOR PLANT DECOMMISSIONING	

ASSIGN OVERALL CONTINGENCY OF $250,000	250,000
SUBTOTAL - DECOMMISSIONING	**$410,000**
CONTINGENCY FOR DECOMMISSIONING REQUIREMENTS @ 20%	$82,000
TOTAL DECOMMISSIONING	**$492,000**
EXISTING RWCWRF SITE - TREATMENT PLANT DEMOLITION, REMOVAL AND SITE RESTORATION	
DEWATER EXISTING TANKS AND BASINS	
DEWATER ALL EXISTING BASINS VIA PUMPING OR EVAPORATION	50,000
CLEAN & DISPOSE OF ANY BIO-SOLIDS IN THE BASIN BOTTOMS (NOT RETURNED TO RSDPS)	200,000
DEMOLITION OF MECHANICAL, ELECTRICAL/I&C AND MISC CIVIL WORKS	
DEMO & DISPOSE - STEEL BRIDGE PS (ABANDON FM TO RWCWRF IN PLACE)	10,000
DEMO & DISPOSE - HEADWORKS	15,000
DEMO & DISPOSE - ACTIVATED SLUDGE	30,000
DEMO & DISPOSE - SECONDARY CLARIFIERS	20,000
DEMO & DISPOSE - RAS PUMPING	7,500
DEMO & DISPOSE - BLOWER BUILDING MECHANICAL, ELECTRICAL/I&C, PIPING, METALS & MISC.	25,000
DEMO & DISPOSE - TERTIARY FILTRATION FACILITIES	20,000
DEMO & DISPOSE - CHEMICAL ADDITION FACILITIES	10,000
DEMO & DISPOSE - AREA RELATED TO ORIGINAL FILTER FACILITIES	10,000
DEMO & DISPOSE - ABANDONED RO FACILITIES	15,000
DEMO & DISPOSE - CHLORINATION FACILITIES AND RELATED AREA	10,000
DEMO & DISPOSE - CHLORINE CONTACT TANK MECHANICAL	12,000
DEMO & DISPOSE - EFFLUENT PUMP STATION	20,000
DEMO & DISPOSE - ADMINISTRATION BUILDING	10,000
DEMO & DISPOSE - WATER STORAGE TANKS NEAR HEADWORKS AREA (INCL CONCRETE PADS)	25,000
DEMO & DISPOSE - MISC MECHANICAL AREAS	50,000
DEMO & DISPOSE - ELECTRICAL SWITCHGEAR, METERING & MCC'S	60,000
DEMOLITION OF ALL EXISTING STRUCTURES	
CLEAN,DEMO & DISPOSE - STEEL BRIDGE PS AND ADJACENT IMHOFF TANK	165,000
CLEAN, DEMO & DISPOSE - HEADWORKS STRUCTURES	35,000
CLEAN, DEMO & DISPOSE - ACTIVATED SLUDGE TANKS	485,000
CLEAN, DEMO & DISPOSE - SECONDARY CLARIFIERS	235,000
CLEAN, DEMO & DISPOSE - RAS PUMPING STRUCTURES	25,000
CLEAN, DEMO & DISPOSE - BLOWER BUILDING	105,000
CLEAN, DEMO & DISPOSE - TERTIARY FILTRATION FACILITIES AND CANOPY	30,000
CLEAN, DEMO & DISPOSE - CHEMICAL ADDITION FACILITIES	10,000
CLEAN, DEMO & DISPOSE - AREA RELATED TO ORIGINAL FILTER FACILITIES	25,000
CLEAN, DEMO & DISPOSE - ABANDONED RO BUILDING	37,000
CLEAN, DEMO & DISPOSE - CHLORINATION FACILITIES AND RELATED AREA	35,000

CLEAN, DEMO & DISPOSE - CHLORINE CONTACT TANK AND CANOPY	45,000
CLEAN, DEMO & DISPOSE - EFFLUENT PUMP STATION	75,000
CLEAN, DEMO & DISPOSE - ADMINISTRATION BUILDING	275,000
CLEAN, DEMO & DISPOSE - MISC STRUCTURES	100,000
CLEAN, DEMO & DISPOSE - ELECTRICAL SWITCHGEAR, METERING & MCC'S	40,000
CIVIL IMPROVEMENTS	
DEMO PAVING & DISPOSE OF ALL SURFACE IMPROVEMENTS	120,000
REGRADE SITE AFTER DEMOLITION OF EXIST FACILITIES INCLUDING IMPORT SOILS TO BACKFILL	290,000
INCORPORATE STORM WATER AND DRAINAGE MEASURES FOR PROPER CONTROL OF RUNOFF	30,000
SURFACE RESTORATION AND FINAL CIVIL IMPROVEMENTS	
LANDSCAPE - LANDSCAPING & IRRIGATION OF SURFACE IMPROVEMENTS	75,000
MISC. SURFACE IMPROVEMENTS (PAVING, SIDEWALKS, ETC.)	50,000
SUBTOTAL - DEMOLITION, REMOVAL AND SITE RESTORATION	**$2,886,500**
CONTINGENCY FOR DEMOLITION, REMOVAL AND SITE RESTORATION	**$577,300**
TOTAL FOR DEMOLITION, REMOVAL AND SITE RESTORATION	**$3,463,800**
GRAND TOTAL	**$3,955,800**

Total Option D relative estimate of probable construction costs = $3,955,800

16.3. Estimate of Probable Abandonment, Decommissioning, Demolition and Restoration Costs Summary (based on May 2012 dollars) For RWCWRF

Description	Estimate of Probable Total Decommissioning & Demolition Costs
Decommissioning	$492,000
Demolition/Restoration	$3,463,800
Grand Total	$3,955,800

Part B – Estimate of Additional Conceptual Power Consumption Costs

The following tables present conceptual estimates of additional annual power costs for each of the management options developed by ARCADIS. Annual costs presented are in addition to existing operational costs for the RWCWRF.

Additional Principal Power Loads - 1.3 MGD (Option A)

Equipment Description	Total No. of Units	Hp per Unit	No. of Operating Units	Total Motor Hp	Total BHp	Total Run KW	Run Time per Day (hrs)	Total KW-Hrs per Year	Annual Power Consumption Cost
DAF Pressurization Pump	2	15.00	1	15	11	8	24	71,885	8,626
DAF Top Scraper Drive	2	0.75	1	0.75	0.50	0.37	24	3,267	392
DAF Air Compressor	2	5.00	1	5	4.00	2.98	24	26,140	3,137
DAF Polymer Feed Pumps	2	5.00	1	5	3.75	2.80	24	24,506	2,941
Supernatant Pump (No pumping req'd. Gravity flow to headworks)	0	0.00	0	0	0	0	0	0	0
Thickened Sludge Pump	2	15.00	1	15	26	19	8	56,636	6,796
Aerobic Digestion Blower	2	40.00	1	40	34	25	24	222,189	26,663
Digested Sludge Pumps	2	10.00	1	10	7.50	5.60	4	8,169	980
Dewatering Polymer Feed Pumps	2	7.50	1	7.5	6.75	5.04	4	7,352	882
Centrifuge Drive	1	50.00	1	50	40	30	4	43,566	5,228
Dewatered Solids Conveyors	1	5.00	1	5	4.00	2.98	4	4,357	523
Total Connected Load	**-**	**-**	**-**	**153**	**138**	**103**	-	**468,067**	**$56,168**

monthly average **$4,681**

Notes:

1- Number of units identified are additive to the existing facilities at 1.3 MDG ADWF

2- Electrical service 480/3/60 with assumed power factor @ 0.8.

3- Assumes a blended electrical service rate of $0.12 per KW-hr

Additional Principal Power Loads - 2.6 MGD (Option B)

Equipment Description	Total No. of Units	Hp per Unit	No. of Operating Units	Total Motor Hp	Total BHp	Total Run KW	Run Time per Day (hrs)	Total KW-Hrs per Year	Annual Power Consumption Cost
Influent Pumps	3	75.00	2	150	110	82	24	718,846	86,261
Mechanical Bar Rack	1	1.00	1	1	0.75	0.56	24	4,901	588
Grit Handling Equipment (Vortex drive and grit pump/classifier)	2	15.00	2	30	22	16	24	143,769	17,252
Aeration Blowers	3	100.00	2	200	170	127	24	1,110,943	133,313
Anoxic Zone Mixers	8	5.00	8	40	32	24	24	209,119	25,094
MLSS Return Pump	2	25.00	2	50	41	31	24	267,933	32,152
Secondary Scum (clarifier) Pumps	2	5.00	1	5	3.70	2.76	6	6,045	725
Secondary Clarifier Drives	4	0.75	4	3	2.20	1.64	24	14,377	1,725
RAS Pumps	3	20.00	2	40	30	22	24	194,742	23,369
WAS Pumps	2	5.00	2	10	7.50	5.60	8	16,337	1,960
Flocculator Drives	2	5.00	2	10	7.50	5.60	24	49,012	5,881
Tertiary Filtration Polymer Feed Pumps	2	5.00	2	10	7.50	5.60	24	49,012	5,881
Air Scour Compressors	2	10.00	1	10	8.00	5.97	4	8,713	1,046
Backwash Pumps	2	10.00	1	10	8.00	5.97	4	8,713	1,046
Sodium Hypochlorite Feed Pumps	4	5.00	2	10	8.50	6.34	24	55,547	6,666
Effluent Pumps	3	100.00	2	200	170	127	24	1,110,943	133,313
DAF Pressurization Pump	2	15.00	2	30	22	16	24	143,769	17,252
DAF Top Scraper Drive	2	0.75	2	1.5	1.00	0.75	24	6,535	784
DAF Air Compressor	2	5.00	1	5	4.00	2.98	24	26,140	3,137
DAF Polymer Feed Pumps	2	5.00	2	10	7.50	5.60	24	49,012	5,881
Supernatant Pump (No pumping req'd. Gravity flow to headworks)	0	0.00	0	0	0	0	0	0	0
Thickened Sludge Pump	3	15.00	2	30	26	19	8	56,636	6,796
Aerobic Digestion Blower	3	40.00	2	80	68	51	24	444,377	53,325

Digested Sludge Pumps	2	10.00	1	10	7.50	5.60	6	12,253	1,470
Dewatering Polymer Feed Pumps	2	7.50	1	7.5	6.75	5.04	6	11,028	1,323
Centrifuge Drive	1	50.00	1	50	40	30	6	65,350	7,842
Dewatered Solids Conveyors	1	5.00	1	5	4.00	2.98	6	6,535	784
Drainage Pumps	2	2.00	1	2	1.50	1.12	4	1,634	196
Sludge Filtrate Pumps (No pumping req'd. Gravity flow to headworks)	0	0.00	0	0	0	0	0	0	0
Blower Room Ventilation	2	1.00	2	2	1.50	1.12	24	9,802	1,176
Miscellaneous Loads	1	1.00	1	-	-	5	24	43,800	5,256
Total Connected Load	**-**	**-**	**-**	**1012**	**818**	**615**	-	**4,845,825**	**$581,499**
								monthly average	**$48,458**

Notes:

1- Number of units identified are additive to the existing facilities at 1.3 MDG ADWF

2- Electrical service 480/3/60 with assumed power factor @ 0.8.

3- Assumes a blended electrical service rate of $0.12 per KW-hr

Additional Principal Power Loads - 3.9 MGD (Option C)

Equipment Description	Total No. of Units	Hp per Unit	No. of Operating Units	Total Motor Hp	Total BHp	Total Run KW	Run Time per Day (hrs)	Total KW-Hrs per Year	Annual Power Consumption Cost
Influent Pumps	3	125.00	2	250	170	127	24	1,110,943	133,313
Mechanical Bar Rack	1	1.00	1	1	0.75	0.56	24	4,901	588
Grit Handling Equipment (Vortex drive and grit pump/classifier)	2	15.00	2	30	22	16	24	143,769	17,252
Aeration Blowers	5	200.00	4	800	680	507	24	4,443,773	533,253
Anoxic Zone Mixers	16	5.00	16	80	66	49	24	431,307	51,757
MLSS Return Pump	4	25.00	4	100	82	61	24	535,867	64,304
Secondary Scum (clarifier) Pumps	2	5.00	1	5	3.70	2.76	6	6,045	725
Secondary Clarifier Drives	4	0.75	4	3	2.20	1.64	24	14,377	1,725
RAS Pumps	6	20.00	4	80	30	22	24	194,742	23,369
WAS Pumps	4	5.00	3	15	11	8	8	24,506	2,941
Flocculator Drives	2	5.00	2	10	7.50	5.60	24	49,012	5,881
Tertiary Filtration Polymer Feed Pumps	2	5.00	2	10	7.50	5.60	24	49,012	5,881
Air Scour Compressors	2	10.00	1	10	8.00	5.97	4	8,713	1,046
Backwash Pumps	2	10.00	1	10	8.00	5.97	4	8,713	1,046
Sodium Hypochlorite Feed Pumps	4	7.50	2	15	12.75	9.51	24	83,321	9,998
Effluent Pumps	6	100.00	4	400	340	254	24	2,221,886	266,626
DAF Pressurization Pump	3	15.00	3	45	36	27	24	235,259	28,231
DAF Top Scraper Drive	3	0.75	3	2	1.50	1	24	9,802	1,176
DAF Air Compressor	3	5.00	2	10	8.00	5.97	24	52,280	6,274
DAF Polymer Feed Pumps	2	5.00	2	10	7.50	5.60	24	49,012	5,881
Supernatant Pump (No pumping req'd. Gravity flow to headworks)	2	5.00	1	5	3.70	2.76	0	0	0
Thickened Sludge Pump	4	15.00	3	45	39	29	8	84,954	10,195
Aerobic Digestion Blower	4	40.00	3	120	102	76	24	666,566	79,988

Digested Sludge Pumps	2	10.00	1	10	8	6	8	16,337	1,960
Dewatering Polymer Feed Pumps	2	7.50	1	7.5	6.75	5.04	8	14,704	1,764
Centrifuge Drive	1	50.00	1	50	40	30	8	87,133	10,456
Dewatered Solids Conveyors	2	5.00	2	10	8.50	6.34	8	18,516	2,222
Drainage Pumps	2	2.00	1	2	2	1	4	1,634	196
Sludge Filtrate Pumps (No pumping req'd. Gravity flow to headworks)	2	5.00	1	5	4	3	0	0	0
Blower Room Ventilation	2	1.00	2	2	2	1	24	9,802	1,176
Miscellaneous Loads	1	1.00	1	-	-	6	24	52,560	6,307
Total Connected Load	**-**	**-**	**-**	**2143**	**1719**	**1288**	-	**10,629,447**	**$1,275,534**
								monthly average	**$106,294**

Notes:

1- Number of units identified are additive to the existing facilities at 1.3 MDG ADWF

2- Electrical service 480/3/60 with assumed power factor @ 0.8.

3- Assumes a blended electrical service rate of $0.12 per KW-hr

Part C – Estimate of Additional Conceptual Chemical Consumption

The following tables present conceptual estimates of additional annual chemical costs for each of the management options developed by ARCADIS. Annual costs presented are in addition to existing operational costs for the RWCWRF. It should be noted that the quantity of sodium hypochlorite is a worst case type of scenario where RAS chlorination is assumed to be continuous on an annual basis. Sodium hypochlorite costs at 1.3 MGD ADF is assumed to be 50% of projected costs for the 2.6 MGD capacity scenario for general planning comparison.

Additional Chemical Consumption Costs – 1.3 MGD (Option A)

Chemical	Additional Annual Consumption	Unit Cost	Annual Cost
DAF Polymer	2,491 active lbs/year	$4.00/lb active	$9,965
Solids Dewatering Polymer	8,098 active lbs/year	$4.00/lb active	$32,394
Sodium Hypochlorite	0 gal/year	$0.80/gal	$0
Total Additional Annual Cost			**$42,359**

Additional Chemical Consumption Costs – 2.6 MGD (Option B)

Chemical	Additional Annual Consumption	Unit Cost	Annual Cost
DAF Polymer	4,982 active lbs/year	$4.00/active lb	$19,929
Solids Dewatering Polymer	16,196 active lbs/year	$4.00/active lb	$64,784
Sodium Hypochlorite	38,690 gal/year	$0.80/gal	$30,952
Total Additional Annual Cost			**$115,665**

Additional Chemical Consumption Costs – 3.9 MGD (Option C)

Chemical	Additional Annual Consumption	Unit Cost	Annual Cost
DAF Polymer	7,473 active lbs/year	$4.00/active lb	$29,894
Solids Dewatering Polymer	24,294 active lbs/year	$4.00/active lb	$97,176
Sodium Hypochlorite	96,360 gal/year	$0.80/gal	$77,088
Total Additional Annual Cost			**$204,158**

Appendix D

Analysis of Wastewater Management Options

APPENDIX D: ANALYSIS OF WASTEWATER MANAGEMENT OPTIONS

This appendix provides detailed discussion and information on the analysis of wastewater management options presented in Chapter 5 of the Wastewater Management Plan report.

5.1 Identification of Wastewater Disposal Options

The purpose of this Appendix is to present potential future wastewater treatment, disposal, and reuse options for the District and compare capital and operational costs over the 20-year planning horizon to 2030. The objective of the comparison is to recommend a wastewater treatment, disposal, and recycling plan to the District based on updated planning and cost estimates for local and regional wastewater management elements potentially affecting future costs to the District wastewater and recycled water customers.

The scope of work for the project includes multiple wastewater disposal and recycled water use variables which result in a large matrix of about 61 alternatives presented to the District staff early in the project implementation stage. In multiple review and discussion meetings and a collaboration and decision-making workshop with District staff, wastewater management options were defined and synthesized into five major feasible alternatives involving wastewater treatment, disposal, and reclamation. In considering all cost elements for wastewater treatment and recycled water use, multiple sub-options were developed for each of the five. The total number of cost sub-options is 18, as presented in sub-section 5.2.

All options presume continued ownership, operation, maintenance, and required expansion of the District's existing wastewater collection system consistent with the wastewater flow projections, hydraulic modeling analyses, and capital improvement projects discussed previously in this report. The five wastewater management options are denoted as Options A through E, as described below.

5.1.1 Option A – Maintain Existing Wastewater Treatment Capacity at the Ralph W. Chapman Water Recycling Facility

This wastewater management option maintains the status quo at the RWCWRF, with the exception of water quality enhancements and potential solids handling facilities at the treatment plant location. The required improvements to the Rancho San Diego Pump Station will be implemented. The capacity of the RWCWRF will remain at the existing 1.3 MGD. All flows conveyed via the District's wastewater collection system in excess of 1.3 MGD will be discharged to the San Diego Metro wastewater collection and treatment system with the associated institutional and financial impacts.

Alternative wastewater solids handling options include onsite treatment at RWCWRF and disposal of residuals in a landfill and continued discharge of solids to the Metro system with attendant costs. Two future City of San Diego wastewater treatment processes and costs are evaluated in Option A. These include 1) continued advanced primary treatment at the Point Loma WWTP and assumed continuance of an existing waiver from the Environmental Protection Agency and 2) upgrade of the Point Loma WWTP to secondary treatment with attendant costs and allocation of the District's fair share of the future capital and operating costs. In a recent Recycled Water Study performed for the City of San Diego and released on May 10, 2012, alternatives to the Point Loma Upgrade were evaluated. Alternatives include diversion of wastewater from Point Loma, increased recycled water use, and Indirect Potable Reuse (IPR) using the San Vicente reservoir and Otay Lakes. Multiple alternatives are presented with projected capital and operating costs.

The selected IPR alternative could result in a reduction in costs from the secondary upgrade costs allocated to the District for those wastewater management options which include continued discharge to the Metro System. Although it is presumed that San Diego and its participating agencies will select the most cost-effective long-term wastewater and recycled water management solution approvable by EPA, this management plan uses the assumption of upgrade to secondary for Point Loma, as prescribed in the original project scope of work.

There are three recycled water treatment and use alternatives in Option A, including continued direct use for irrigation from the RWCWRF, purchase and use of tertiary effluent from the City of San Diego SBWRP in accordance with an existing agreement with the City, and potential purchase from a future Chula Vista membrane bio-reactor (MBR) wastewater reclamation plant recommended at Site 3 (at Main Street and Mace Street) in Chula Vista in the April 2012 Acquisition of Additional Wastewater Capacity Report.

Figure 5.1 below depicts the conceptual flow, treatment, wastewater discharge, and recycled water use schematic for wastewater management Option A. Note that recycled water purchases from the San Diego South Bay plant and a potential future Chula Vista plant are not indicated on the diagram, although these alternatives are evaluated in the cost comparisons. For cost evaluations, there are 6 sub-options for Option A with alternatives for purchase of recycled water, RWCWRF on-site solids handling or not, and Point Loma WWTP upgrade or not. Sub-options are designated as A-1 through A-6, for Option A

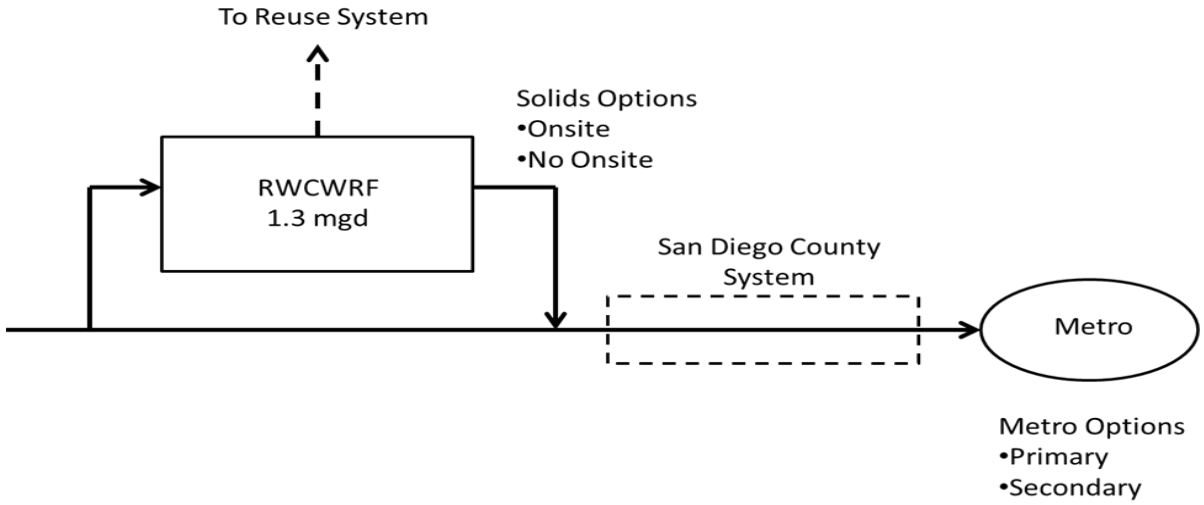

Figure 5.1 Option A: Maintain Existing Wastewater Treatment Capacity at the Ralph W. Chapman Water Recycling Facility

5.1.2 Option B – Expand the Ralph W. Chapman Water Recycling Facility to 2.6 MGD

Option B includes the expansion of the RWCWRF from 1.3 MGD to 2.6 MGD consistent with the flow projections discussed in Chapter 2. Flows in excess of 2.6 MGD will be conveyed to the Metro wastewater collection and treatment system. Required improvements at the Rancho San Diego Pump Station will continue to be funded by the District proportional to its capacity ownership and wastewater discharges to the pump station. The District will continue to pay the existing and future unit costs associated with the Rancho

San Diego Pump Station and the associated charges for treatment at the San Diego Point Loma WWTP under the assumed two alternatives of advanced primary treatment and full secondary treatment if solids handling is not constructed at the RWCWRF

Solids handling options include onsite treatment at the RWCWRF and disposal of residuals in landfill and continued discharge to the Metro collection and treatment system. Recycled water treatment and use alternatives include treatment and conveyance from the RWCWRF and purchase and use from the SBWRP. Purchase and use from a future Chula Vista MBR water reclamation plant are not included since the engineering feasibility conditions were based on the RWCWRP remaining at its current 1.3 MGD capacity. Figure 5.2 below indicates a conceptual wastewater flow and discharge diagram from the RWCWRF for Option B. Note that the recycled water purchase from SBWRP is not shown. There are 3 sub-options for cost evaluations from Option B, designated as B-1, B-2 and B-3.

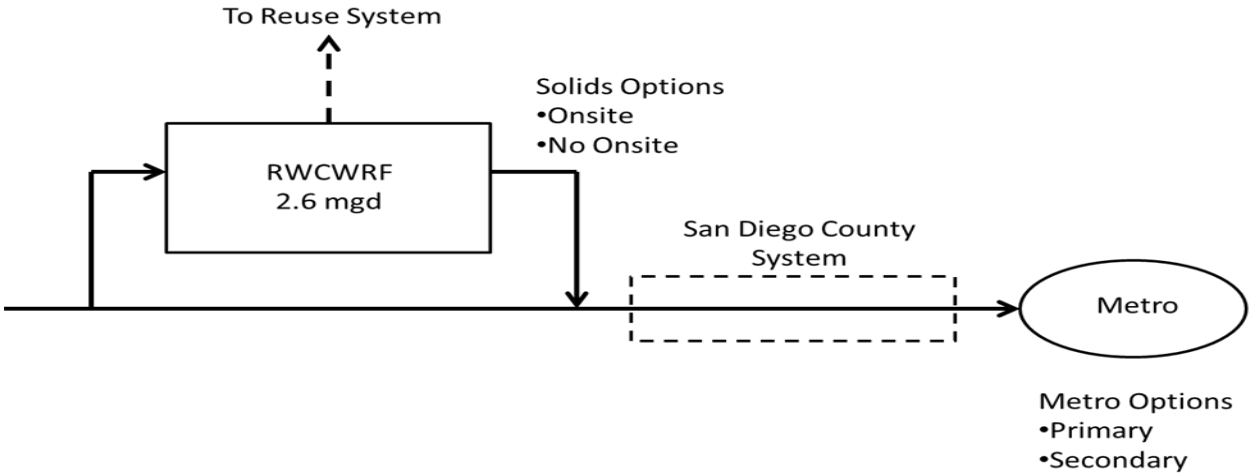

Figure 5.2 Option B: Expand the Ralph W. Chapman Water Recycling Facility to 2.6 MGD

5.1.3 Option C – Expand the Ralph W. Chapman Water Recycling Facility to 3.9 MGD

Option C includes the expansion of the RWCWRF from 1.3 MGD to 3.9 MGD. It is recognized that the Jamacha Basin wastewater flow projections discussed in Chapter 2 do not indicate the need for a 3.9 MGD treatment capacity at the RWCWRF. However, the District decided to maintain the incremental modularity of the treatment plant capacity and assume an expansion module of 2.6 MGD consistent with Option B. Flows in excess of those treated by RWCWRF will be conveyed to the Metro System. Flows anticipated to be treated by Metro are anticipated to be minimal only, conveyed at times of RWCWRF plant maintenance or emergency interruptions. Required improvements at the Rancho San Diego Pump Station will continue to be funded by the District proportional to its ownership and wastewater discharges to the pump station. The District will continue to pay the existing and future unit costs associated with the Rancho San Diego Pump Station and the associated charges for treatment at the Point Loma WWTP under the assumed two alternatives of advanced primary treatment and full secondary treatment, if no solids handling facilities are constructed at RWCWRF.

Solids handling options include onsite treatment at the RWCWRF and disposal of residuals in a landfill and continued discharge to the Metro System. Recycled water treatment and use alternatives include treatment and conveyance from the RWCWRF and purchase and use from the SBWRP. Purchase and use from a future Chula Vista MBR water reclamation plant are not assumed for Option C based on the engineering and economic feasibility study for the Chula Vista plant. Figure 5.3 below indicates a conceptual wastewater flow and discharge diagram for Option C. Recycled water use from SBWRP is not indicated on the diagram. There are 3 sub-options for cost evaluation for Option C.

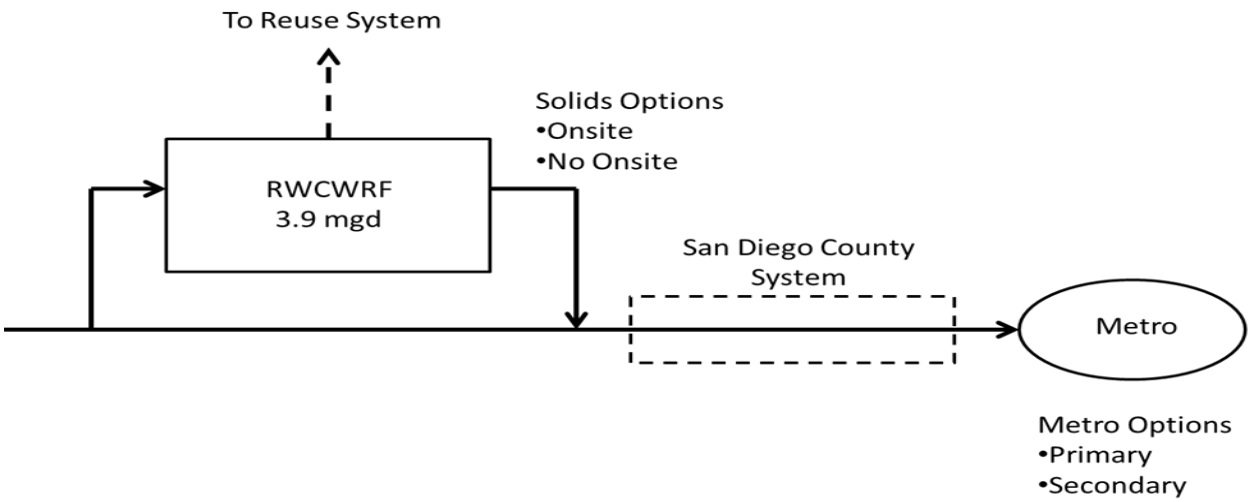

Figure 5.3 Option C: Expand the Ralph W. Chapman Water Recycling Facility to 3.9 MGD

5.1.4 Option D – Abandon and Demolish the Ralph W. Chapman Water Recycling Facility

Option D includes the decommissioning and demolition of the RWCWRF. All wastewater collected in the Jamacha Basin will be sent to the Point Loma WWTP through the Rancho San Diego Pump Station. Required improvements at the Rancho San Diego Pump Station will continue to be funded by the District proportional to its ownership and wastewater discharges to the pump station. The District will continue to pay the existing and future unit costs associated with the Rancho San Diego Pump Station and the associated charges for treatment at the Point Loma WWTP under the assumed two alternatives of advanced primary treatment and full secondary treatment.

Recycled water treatment and use alternatives are limited to purchase and use from the San Diego SBWRP and purchase and use from a future Chula Vista MBR water reclamation plant. There are provisions in the Otay/San Diego SBWRP agreement that require a minimum amount of recycled water to be annually purchased from South Bay whether the District uses the recycled water or not. This provision is typically referred to as a “Take-or-pay” requirement and was considered in determining the financial impacts to the District's annual recycled water costs. Additionally, in the Chula Vista Acquisition of Additional Wastewater Capacity Project, the Chula Vista consultant assumed that RWCWRF would remain at 1.3 MGD capacity and that Chula Vista recycled water would be purchased prior to purchase of recycled water from the SBWRP. This provision would require a modification to the existing District-SBWRP agreement. Figure 5.4 below indicates a conceptual wastewater flow and discharge diagram for Option D, with no recycled water use shown from RWCWRF. There are 4 sub-options for cost evaluations for Option D.

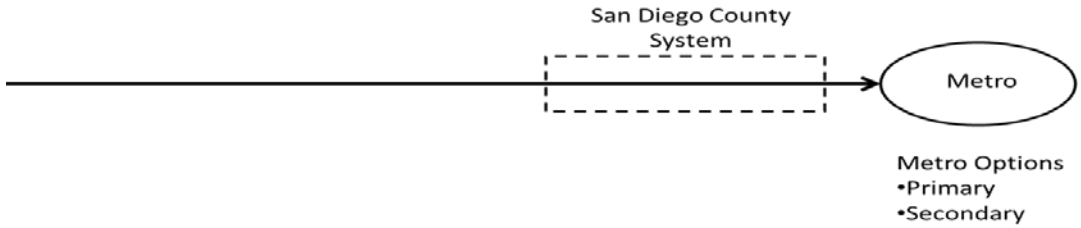

Figure 5.4 Option D: abandon and Demolish the Ralph W. Chapman Water Recycling Facility

5.1.5 OPTION E – Abandon and Demolish the Ralph W. Chapman Water Recycling Facility and Participate in a New Joint Wastewater Treatment and Recycling Facility with San Diego County

Option E includes the decommissioning and demolition of the RWCWRF. Wastewater collected in the Jamacha Basin will be sent to a new proposed joint wastewater treatment and recycling facility with San Diego County or the Point Loma WWTP through the Rancho San Diego Pump Station. Required improvements at the Rancho San Diego Pump Station will continue to be funded by the District proportional to its capacity ownership and wastewater discharges to the pump station. The District will continue to pay the existing and future unit costs associated with the Rancho San Diego Pump Station and the associated charges for treatment at the San Diego Point Loma WWTP under the assumed two alternatives of advanced primary treatment and full secondary treatment. Collection system modifications and extensions will be required to convey existing flow to the new joint WWTP and to by- pass to the Metro System, as required. Solids treatment at the new joint plant is assumed, since the plant process is assumed to be the same as the Chula Vista MBR plant. The conceptual joint new WWTP has been described in the 1997 report by Metcalf and Eddy for San Diego County entitled “Water Reclamation Facility Project Feasibility Report”. The concept included a 10 MGD plant located near I-805 and the Sweetwater River, using an activated sludge aeration process. For the District's Wastewater Management Plan, we have assumed an MBR plant similar to the Chula Vista proposal with cost estimates the same as the Chula Vista plant for equivalent capacity.

Recycled water treatment and use alternatives include production and delivery from a new joint WWTP, purchase and use from the existing SBWRP, and purchase and use from a future Chula Vista MBR water reclamation plant. Figure 5.5 below indicates a conceptual wastewater flow and discharge diagram for Option E. There are two sub-options for cost evaluation for Option E.

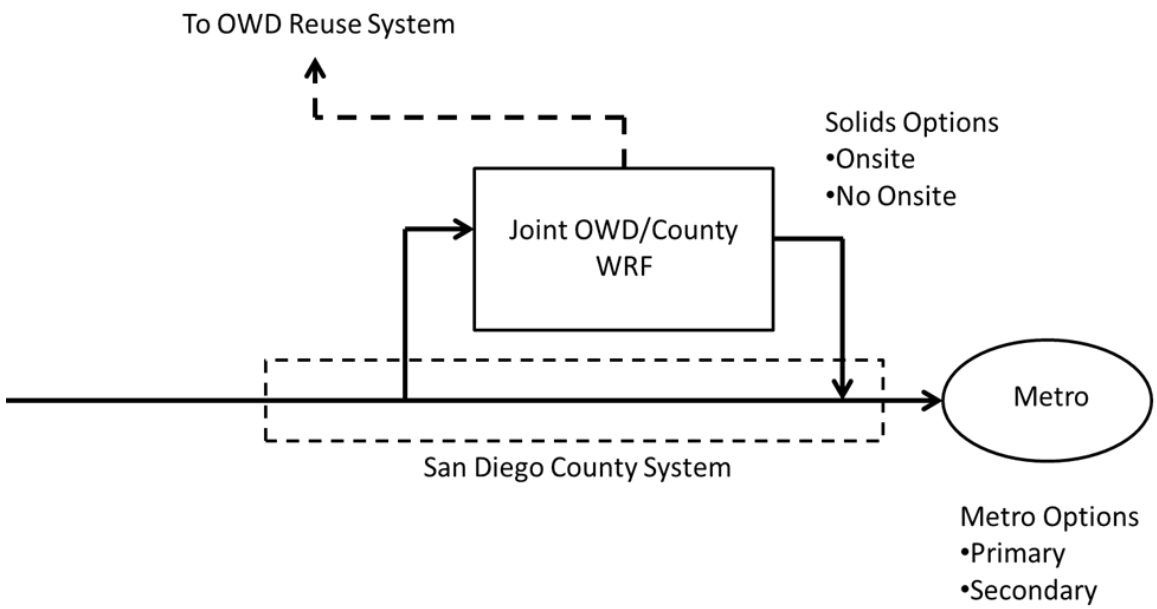

Figure 5.5 Option E: abandon the Ralph W. Chapman Water Recycling Facility and Participate in a New Joint WWTP and Recycling Project with San Diego County

5.2 Economic Evaluations of Wastewater Disposal and Recycled Water Use Options

An initial project challenge involved the determination of key cost factors associated with each of the five wastewater management options described above. Cost factors were broken into wastewater treatment components and recycled water components. Table 5-1 indicates the wastewater treatment cost elements; including costs for solids handling, expansion, and decommissioning of the RWCWRF; existing, new capacity, and Point Loma WWTP upgrade costs to Metro; and the District's share of a proposed joint San Diego County/Otay new wastewater treatment and recycled water facility. Wastewater treatment costs include capital and annual operation and maintenance costs.

Table 5-1. Wastewater Treatment Cost Components for Different Options

Wastewater Management Option	A	B	C	D	E
RWRWRF					
• Expansion	0	$	$	0	0
• On-Site Solids Handling	$	$	$	0	0
• Decommissioning	0	0	0	$	$
Metro System Capacity					
• Existing Charge (w/o on-site solids handling)	$	$	$	$	0
• New Capacity Charge (w/o on-site solids handling)	0	$	$	$	0
• Point Loma WWTP Upgrade (w/o on-site solids handling)	$	$	$	$	0
New County/Otay WWTP	0	0	0	0	$

Notes: $ = capital and operational costs exist for this option. 0 = no costs exist for this option.

Table 5-2 indicates the recycled water sources which exist for each of the wastewater management options. There exist four potential sources of recycled water under the five options, including the RWCWRF, the Metro SBWRP, a new potential Chula Vista MBR WRP, and a new potential joint County/Otay WWTP. Cost elements allocated for recycled water include costs to purchase each unit of recycled water from the SBWRP and the new Chula Vista WRP and capital costs for new booster stations and pipelines to deliver water from the proposed two new plants to the District's recycled water distribution system. Option E only assumes purchase of recycled water from the SBWRP and the new County/District plant.

Table 5-2. Recycled Water Sources Under Different Management Options

Wastewater Management Option	A	B	C	D	E
RWCWRF	X	X	X	0	0
SBWRP	X	X	X	X	X
New Chula Vista WRP	X	0	0	X	0
New County/District WWTP	0	0	0	0	X

Notes: X = recycled water provided to Otay for this option. 0 = no recycled water for this option.

In consideration of the key variables for evaluating capital and annual O&M costs for Options A through E, sub-options have been identified to compare present worth costs. Sub-options are combinations of wastewater treatment, disposal, and recycled water purchase variables. The matrix of options and sub-options included the following:

Option A: Six total sub-options.

(1) RWCWRF on-site solids handling, no Point Loma upgrade, Chula Vista RCW purchase

(2) RWCWRF on-site solids handling, no Point Loma upgrade, no Chula Vista RCW purchase

(3) RWCWRF no on-site solids handling, Point Loma upgrade, Chula Vista RCW purchase

(4) RWCWRF no on-site solids handling, Point Loma upgrade, no Chula Vista RCW purchase

(5) RWCWRF no on-site solids handling, no Point Loma upgrade, Chula Vista RCW purchase

(6) RWCWRF no on-site solids handling, no Point Loma upgrade, no Chula Vista RCW purchase

Option B: Three total sub-options.

(1) RWCWRF on-site solids handling, no Point Loma upgrade

(2) RWCWRF no on-site solids handling, Point Loma upgrade

(3) RWCWRF no on-site solids handling, no Point Loma upgrade

Option C: Three total sub-options.

(1) RWCWRF on-site solids handling, no Point Loma upgrade

(2) RWCWRF no on-site solids handling, Point Loma upgrade

(3) RWCWRF no on-site solids handling, no Point Loma upgrade

Option D: Four total sub-options (Metro discharge).

(1) No RWCWRF, Point Loma upgrade, Chula Vista RCW purchase

(2) No RWCWRF, no Point Loma upgrade, Chula Vista RCW purchase

(3) No RWCWRF, Point Loma upgrade, no Chula Vista RCW purchase

(4) No RWCWRF, no Point Loma upgrade, no Chula Vista RCW purchase

Option E: Two sub-options (new County/District WWTP).

(1) No RWCWRF, Point Loma upgrade

(2) No RWCWRF, no Point Loma upgrade

A matrix indicating the sub-options associated with each major wastewater management option is included below as table 5-3.

Table 5-3. Matrix of Sub-Options Evaluated

Wastewater Management Option		Recycled Water from SBWRP Only No Chula Vista Purchases		Recycled Water from Chula Vista WRF Only No SBWRP Purchases	
		No Point Loma WWTP Upgrade	Point Loma WWTP Upgrade	No Point Loma WWTP Upgrade	Point Loma WWTP Upgrade
A	Onsite sludge	A-2	--	A-1	--
	No onsite sludge	A-6	A-4	A-5	A-3
B	Onsite sludge	B-1	--	--	--
	No onsite sludge	B-3	B-2	--	--
C	Onsite sludge	C-1	--	--	--
	No onsite sludge	C-3	C-2	--	--
D		D-4	D-3	D-2	D-1
E (onsite sludge)		E-2	E-1		

5.3 Cost Estimates for Expansion and Demolition of the RWCWRF

The District treats raw wastewater and produces recycled water at the RWCWRF and purchases additional recycled water from the SBWRP. Detailed capital cost estimates have been prepared associated with upgrading, expanding, and decommissioning the RWCWRF under Options A through D, based on site visits, review of construction plans, and layout of new facilities. A site map of the RWCWRF with suggested new locations of processes required for upgrade and expansion for Options A through C is included as Appendix B. Option A maintains the RWCWRF at its current nominal ADWF of 1.3 MGD and adds solids handling facilities. Option B expands the RWCWRF to a nominal ADWF of 2.6 MGD, adds solids handling facilities, and adds tertiary filtration and chlorination, including a larger chlorine contact chamber to preclude the recycled water pipeline from meeting CA Title 22 requirements for contact time. Option C expands the RWCWRF to 3.9 MGD, adds solids handling facilities, and adds tertiary filtration and chlorination. Option D decommissions the RWCWRF, restores the site, and relies on other agencies to treat District wastewater and provide required recycled water for irrigation.

Capital cost estimates provided are expressed in May 2012 dollars based on the Los Angeles ENR Construction Cost Index of 10285. No allowances for inflation or financing costs have been included. Cost estimates are prepared in accordance with a Class 3 estimate of the Association for the Advancement of Cost Engineering International (AACEI). A Class 3 estimate may be expected to fall within the range of +25%/-15% of actual costs. For planning studies such as this, capital cost estimates are generally Class 5, having a much broader range of predicted accuracy for actual costs. The higher class estimate provides more detailed analysis of treatment process component size and costs that will add value to the planning

and budgeting process. General contingencies were applied to the estimates for each of the treatment processes evaluated. The cost estimates shown are related only to costs that would be included in a general contractor's bid for related construction work and do not include District administration, engineering, third party construction management, environmental documentation, and other non-contractor costs. Actual project final costs will depend on the type of project delivery selected by the District, actual labor and material costs, competitive market conditions, actual site conditions, final project scope, implementation schedule, and other factors.

The RWCWRF Assessment of Capital Costs Report, included in Appendix C, is very detailed and organized by treatment process at the RWCWRF. Individual treatment processes have component sizing criteria, dimensions, units for costing, quantities, unit prices, and total price. In the detailed report, costs for Options A through C are grouped under each treatment process category. A summary of total capital costs for 15 components of the RWCWRF solids handling and improved disinfection upgrade and expansion Options A through C is shown in the Table 5-4 below.

Table 5-4. Summary of RWCWRF Conceptual Capital Costs for Options A, B and C in millions

Treatment Process	Option A – Maintain RWCWRF at 1.3MGD	Option B – Expand RWCWRF to 2.6MGD	Option C – Expand RWCWRF to 3.9MGD
Influent Pump Station	0	1.132	1.293
Headworks & Grit Removal	0	2.043	2.196
Aeration Basins	0	3.333	5.897
Secondary Clarifiers	0	1.964	3.582
RAS/WAS Pump Station	0	0.820	1.491
Scum Pump Station	0	0.173	0.173
Effluent Pump Station	0	0.788	1.542
Administration Building	0	0	1.040
Blower & Electrical Building	0	2.052	2.488
Aerobic Digestion	1.462	2.760	3.936
Digested Sludge Pump St.	0.121	0.229	0.331
WAS Thickening	0.848	1.579	2.309
Sludge Dewatering Centrifuge	0.915	0.915	1.748
Tertiary Filters (+Flocculation)	0	0.648	1.296
NaOCl Storage, Pumping, and Chlorine Contact Tank	0	2.012	2.201
Total	**3.346**	**20.450**	**31.524**

5.3.1 Estimate of Additional RWCWRF Power Loads and Chemical Costs

In addition to capital cost estimates for the RWCWRF components of Options A through C, specific elements of annual operating costs have been projected for the three options. Key elements of operational

cost include additional power cost and additional chemical costs. Added chemical and power costs are assumed to be attributed to new solids handling facilities for Option A. Solids handling operational costs for Option B are assumed to be twice the annual costs for Option A. Solids handling costs for Option C are assumed to be three times annual costs for Option A. Additional salary, benefit, and admin costs have not been estimated. Power cost per KWH assumes a blended rate of $0.12. These values are incorporated into Table 5-5 below.

Table 5-5. Summary of RWCWRF Annual Added Operational Costs for Options A, B and C

O & M Component	Option A – Maintain RWCWRF at 1.3MGD	Option B – Expand RWCWRF to 2.6MGD	Option C – Expand RWCWRF to 3.9MGD
Additional KWHs per year	468,067	4,845,825	10,629,447
Annual added power cost	$56,168	$581,499	$1,275,534
DAF polymer annual cost	$9,965	$19,929	$29,894
Solids dewatering polymer	$32,394	$64,784	$97,176
Sodium Hypochlorite cost	$0	$30,952	$77,088

5.3.2 Estimate of Cost to Decommission and Abandon the RWCWRF and Steel Bridge Pump Station

The Appendix C report also includes the estimated costs to decommission the RWCWRF and the Steel Bridge Pump Station, which pumps raw wastewater to the RWCWRF. Costs are expressed as two primary elements: decommissioning and demolition/restoration. These costs are associated with wastewater management Option D. Decommissioning is estimated to cost $492,000. Demolition and restoration have a combined estimated cost of $3,463,800. The collective cost is $3,955,800.

The total estimated capital and operational costs presented above for Options A through D have been combined with other cost elements associated with meeting the projected wastewater treatment and recycled water needs of the District to year 2030, provided in Chapters 2 and 4 of this wastewater management plan.

5.4 Wastewater Treatment and Recycled Water Use Cost Modeling for Options A through E.

Based on the Otay wastewater flow projections presented in Chapter 2 and the recycled water use projections presented in Chapter 4, a major objective of this wastewater management plan is to compare projected capital and operating costs for the five wastewater management options to develop a recommended District course of action for the future. To facilitate comparison of costs, the consultant team prepared a detailed Excel workbook of individual, linked spreadsheets for each option. Linking spreadsheets allows changes in financial assumptions to automatically recalculate anticipated costs. The comparative cost approach was present worth, using the sum of capital costs in 2012 dollars and today's value of annual operating and maintenance costs from 2015 through 2030 (16 years). Both capital and operating and maintenance costs for wastewater treatment and recycled water purchase were separately calculated and summed to a total present worth value. The goal of the present worth analysis was to determine the predicted values for all five options and sub options (on-site solids handling and Metro Point Loma treatment

process) and compare results. The Excel workbook is included as Appendix D on a CD contained in a pocket at the end of the hard copy of this report.

A common set of assumptions was developed for all five options, which are included as variables in the Excel workbook for future “what-if” scenario evaluation. For initial economic analyses in this study, the list of assumptions indicated in Table 5-6 was used. References for individual cost values are indicated in the table footnotes. Assumptions for both wastewater discharge and recycled water purchase are shown.

Table 5-6. Economic Cost Assumptions for All Options

SBWRF, Chula Vista, Joint Plant Recycled Water Purchase Rate (per AF) [1]	$350
2012 Metro County Wastewater Discharge Rate (per MGD) [2,6]	$3,089,634
Additional Metro Capacity Cost (per MGD) [3]	$30,000,000
PLWWTP Upgrade Capital Cost [4]	$1,161,174,957
Otay WD Capital Cost for PLWWTP Upgrade (0.513%) [4]	$5,956,828
PLWWTP Upgrade O&M Cost [4]	$37,497,060
Otay WD Annual O&M Cost for PLWWTP Upgrade (per MGD) [4]	$156,238
MWD/SDCWA Rebate (per AF) [5]	$385

[1] Based on Recycled Purchase Agreement between City of San Diego and Otay WD.

[2] Based on Metro Discharge Agreement between City of San Diego and Otay WD.

[3] $22 Million paid to Metro, $8 Million paid to the County. A one-time up-front cost for buying capacity in these systems.
[4] Point Loma WWTP Secondary Treatment Upgrade Costs at Different Capacities from The City of San Diego's Wastewater Master Plan and Recycled Water Study, May 2012

[5] $185/AF is received from MWD; $200/AF comes from the SDCWA.

[6] Lump sum of Metro Cost and County cost based on recent District invoices.

In addition to the above assumed cost factors, it was necessary to make an assumption about projected value of money (assumed to be increasing at 2 percent per year) for determining the present worth of operating and maintenance expense. This value is a workbook variable that can be modeled, as desired.

The potential new Chula Vista MBR water recycling plant was assumed to be available for purchase of recycled water for Options A and D at a price of $350 per acre-foot per the 2012 feasibility study for the City of Chula Vista. The study assumed that the RWCWRF would not be expanded and that Otay would purchase recycled water from Chula Vista prior to purchase from the Metro SBWRF. This provision would require an amendment to the existing Metro/Otay agreement for recycled water purchase from the SBWRP.

5.4.1 Present Worth Costs for Option A

For all options, wastewater discharge present worth costs are based on projected wastewater discharge rates, facilities used, and facility and contract costs over the planning horizon (2030). For all options, recycled water purchase costs are based on projected recycled water needs, production sources, production amounts, and facility and contract costs over the planning horizon. In the sections that follow, the bases for costs for each of the 18 sub-options have been indicated separately as wastewater discharge amounts and costs and recycled water use amounts and costs. Wastewater discharge and recycled water use volumes are indicated for five-year planning horizons from 2010 (actual) through 2030, consistent with District projections indicated previously. This subsection of the report presents individual O&M and capital cost elements, assumptions for present worth analyses, and present worth calculation results for the six sub-options associated with Option A.

Table 5-7 indicates projected District wastewater flows and total projected Metro System discharge based on a treatment flow of 1.0 MGD by the RWCWRF per sub-options A-2, A-4, and A-6. Additionally, the table indicates recycled water use projections, RWCWRF production, SBWRP needs, and SBWRP required annual purchase under the existing contract "take or pay" provision for minimum annual purchase amounts. The required purchase is used for determining annual costs to the District, even though the District may not need nor take the amount indicated in the table as the annual contract amount. Table 5-8 indicates the same formation in terms of acre-feet per year. For the remaining options and associated sub-options for B-E, only the MGD units tables will be shown, since it is easy to convert to acre-feet per year (AFY) using 1120 AFY equals 1 MGD.

Table 5-7. Option A – Projected Wastewater Discharge and Recycled Water Production Rates (MGD) (Sub-options 2, A-4, A-6)

Wastewater Discharge	2010	2015	2020	2025	2030
Total Metro Discharge [1]	0.84	0.93	0.97	1.09	1.15
Total District WW Flow	1.84	1.93	1.97	2.09	2.15
Recycled Water					
RWCWRF Production [2]	1.00	1.00	1.00	1.00	1.00
Recycled Demand [3]	3.64	3.93	4.46	5.18	6.07
SBWRP Purchase	2.64	2.93	3.46	4.18	5.07
SBWRP Annual Contract Amount [4]	2.98	4.11	4.74	5.14	-

[1] Otay WD has a 1.231 MGD Metro capacity.

[2] Producing 77% of Total RWCWRF Capacity per existing condition.

[3] Based on Recycled Water Memo 06-08-12.

[4] Based on Recycled Purchase Agreement between City of San Diego and the District.

Table 5-8. Option A – Projected Wastewater Discharge and Recycled Water Production Rates (AFY) (Sub-options A A-4, A-6)

Wastewater Discharge	2010	2015	2020	2025	2030
Total Metro Discharge [1]	941	1,042	1,086	1,221	1,288
Total District WW Flow	2,061	2,162	2,206	2,341	2,408
Recycled Water					
RWCWRF Production [2]	1,120	1,120	1,120	1,120	1,120
Recycled Demand [3]	4,077	4,402	4,995	5,802	6,798
SBWRP Purchase	2,957	3,282	3,875	4,682	5,678
SBWRP Annual Contract Amount [4]	3,338	4,604	5,312	5,758	-

[1] Otay WD has a 1.231 MGD Metro capacity.

[2] Producing 77% of Total RWCWRF Capacity per existing condition.

[3] Based on Recycled Water Memo 06-08-12.

[4] Based on Recycled Purchase Agreement between City of San Diego and the District.

Options A and D have an alternative involving purchase of recycled water from a new Chula Vista MBR plant, if that plant is constructed per Chula Vista's Acquisition of Additional Wastewater Capacity Project Report dated April 2012. This report recommends the Membrane Bioreactor (MBR) treatment process at a specified location approximately 8,000 feet from existing Otay recycled water system. The plant is proposed to be constructed in three equal phases of 2 MGD capacity each to a maximum of 6 MGD. This management plan assumes that recycled water will be available to Otay beginning in 2020 at $350 per acre-foot. This plan also assumes that the requirement to hold RWCWRF to 1.3 MGD capacity is enforced and

that Chula Vista recycled water may be purchased only under Option A and D. For these two options, present worth costs are computed for both with Chula Vista purchases and without Chula Vista purchases.

Table 5-9 indicates the projected recycled water purchases from 2010-2030 from the SBWRP and the proposed Chula Vista MBR plant used for calculations in sub-options A-1, A-3, and A-5. The Chula Vista recycled water availability assumption is 2 MGD in 2020, 4MGD in 2025, and 6 MGD in 2030. Purchases from Chula Vista will reduce the District's recycled water need from the SBWRP to 0.18 MGD in 2025 and zero in 2030.

Table 5-9. Option A-1 – Projected Recycled Water Production Rates from SBWRP and Chula Vista (Sub-options A-1, A-3, A-5)

Recycled	2010	2015	2020	2025	2030
Chula Vista Available [1]	-	-	2.00	4.00	6.00
Chula Vista Purchase	-	-	2.00	4.00	5.07
SBWRP Purchase	2.64	2.93	1.46	0.18	-

[1] Based on City of Chula Vista's Acquisition of Additional Wastewater Capacity Project Final Report April 2012

Table 5-10 indicates projected annual O&M costs and capital costs for sub-option A-1, which includes recycled water purchases from Chula Vista. Individual line items for O&M and capital costs are shown for both wastewater treatment and recycled water. The table assumes a continuing rebate from MWD and the SDCWA for an assumed annual production of 1,120 acre-feet from RWCWRF. The rebate amount offsets a portion of annual costs. Footnotes in the table indicate sources of information for specific cost elements associated with a specific sub-option. Capital costs included in the lower portion of the table are for solids handling facilities at RWCWRF and a new 6 MGD pump station and pipeline to deliver recycled water to the District's existing distribution system. Values in Table 5-10 are used to compute present worth costs shown in subsequent tables.

Table 5-11 shows the resulting calculation of present worth costs for the sum of wastewater treatment and disposal and recycled water use for sub-option A-1. The resulting calculation indicates a combined present worth of about $35M.

Table 5-10. Option A-1 – Annual O&M and Capital Costs

O&M Costs	2010	2015	2020	2025	2030
RW Cost (purchase Chula Vista)	$ -	$ -	$784,000	$1,568,000	$1,987,440
RW Cost (purchase SBWRF)	$1,034,880	$1,148,560	$572,320	$70,560	$ -
MWD/SDCWA Rebate	$ (431,200)	$ (431,200)	$(431,200)	$(224,000)	$(224,000)
Metro Discharge Cost	$2,595,293	$ -	$ -	$ -	$ -
PLWWTP Upgrade Cost	$ -	$ -	$ -	$ -	$ -
On-Site Solids Handling Power Cost [1]	$ -	$56,168	$56,168	$56,168	$56,168
On-Site Solids Handling Chemical Cost [1]	$ -	$42,359	42,359	$42,359	$42,359
Power Cost [2]	$90,100	$90,100	$90,100	$90,100	$90,100
Chemical Cost [1]	$ -	$ -	$ -	$ -	$ -
Collection/Treatment/Operation [2]	$354,682	$354,682	$354,682	$354,682	$354,682
RWCWRF operating cost	$199,211	$199,211	$199,211	$199,211	$199,211
Capital Costs	**2010**	**2015**	**2020**	**2025**	**2030**
On-Site Solids Handling Cost [1]	$ -	$3,345,620	$ -	$ -	$ -
PLWWTP Upgrade Cost	$ -	$ -	$ -	$ -	$ -
Chula Vista Pump Station/Pipeline [3]	$ -	$ -	$3,960,000	$ -	$ -

[1] Based on Final RWCWRF Capital Cost Assessment 10-29-12.

[2] Based on Recycled and Sewer Cost Spreadsheet.

[3] 6 MGD Pump Station (600 hp), 8000 LF of Pipeline.

Similar tables are used to present annual O&M and capital costs for the sub-options A-2 through A-6, as well as resulting present worth cost calculations. Tables 5-12 and 5-13 provide similar cost data for sub-option A-2, which includes the capital costs for on-site solids handling at RWCWRF. Resulting present worth costs are about $37 M. Tables 5-14 and 5-15 indicate results of cost projections for sub-option A-3. This sub-option presumes contribution by the District to the cost of a Point Loma WWTP upgrade or a Metro alternative which achieves requirements for a continued waiver for advanced primary ocean discharge from the US Environmental Protection Agency. Both capital and increased annual O&M costs are included. The calculated present worth for this sub-option is $84.6 M. Tables 5-16 and 5-17 indicate cost assumptions and calculations for sub-option A-4. This sub-option also includes Point Loma upgrade costs. Total present worth costs are $87M. Tables 5-18 and 5-19 provide costs for sub-option A-5. Present worth is $77M. Results for sub-option A-6 are provided in Tables 5-20 and 5-21. The resulting present worth cost is $79.3 M. Option A present worth costs are generally less than those for all other sub-options for Option B through E. On-site solids handling options are less costly than no on-site solids handling. Purchase of recycled water from Chula Vista shows minor cost improvement over continued purchase from SBWRP due to the take or pay provision.

Table 5-11. Option A-1 – Present Worth of Wastewater and Recycled Water Costs

Present Worth (Wastewater)	**2010**	**2015**	**2020**	**2025**	**2030**
Interest Rate		2%	2%	2%	2%
Uniform Amount per Interest Period		742,520	$742,520	$742,520	$742,520
Factor Table		4.7135	4.7135	4.7135	1.0000
O&M Present Worth		$3,499,869	$3,499,869	$3,499,869	$742,520
Capital Costs		$3,345,620	$ -	$ -	$ -
Present Worth Amount		$6,845,489	$3,499,869	$3,499,869	$742,520
Wastewater Total	**$14,587,746**				

Present Worth (Recycled)	**2010**	**2015**	**2020**	**2025**	**2030**
Interest Rate		2%	2%	2%	2%
Uniform Amount per Interest Period		$717,360	$925,120	$1,414,560	$1,763,440
Factor Table		4.7135	4.7135	4.7135	1.0000
O&M Present Worth		$3,381,276	$4,360,553	$6,667,529	$1,763,440
Capital Costs		$ -	$3,960,000	$ -	$ --
Present Worth Amount		$3,381,276	$8,320,553	$6,667,529	$1,763,440
Recycled Total	**$20,132,798**				
Total	**$34,720,545**				

Table 5-12. Option A-2 – Annual O&M and Capital Costs

O&M Costs	**2010**	**2015**	**2020**	**2025**	**2030**
RW Cost (purchase SBWRF)	$1,168,300	$1,611,400	$1,859,200	$2,015,300	$1,987,440
MWD/SDCWA Rebate	$(431,200)	$ (431,200)	$(431,200)	$(224,000)	$(224,000)
Metro Discharge Cost	$2,595,293	$-	$ -	$ -	$
PLWWTP Upgrade Cost	$ -	$-	$ -	$ -	$ -
On-Site Solids Handling Power Cost [1]	$ -	$56,168	$56,168	$56,168	$56,168
On-Site Solids Handling Chemical Cost [1]	$ -	$42,359	$42,359	42,359	$42,359
Power Cost [2]	$90,100	$90,100	$90,100	$90,100	$90,100
Chemical Cost [1]	$ -	$ -	$ -	$ -	$ -
Collection/Treatment/Operation [2]	$354,682	$354,682	$354,682	$354,682	$354,682
RWCWRF Operating Cost [2]	$ 199,211	$199,211	$199,211	$199,211	$199,211
Capital Costs	**2010**	**2015**	**2020**	**2025**	**2030**
On-Site Solids Handling Cost [1]	$ -	$3,345,620	$ -	$ -	$ -
PLWWTP Upgrade Cost	$ -	$ -	$ -	$ -	$ -

[1] Based on Final RWCWRF Capital Cost Assessment 10-29-12.

[2] Based on Recycled and Sewer Cost Spreadsheet.

Table 5-13. Option A-2 – Present Worth of Wastewater and Recycled Water Costs

Present Worth (Wastewater)	**2010**	**2015**	**2020**	**2025**	**2030**
Interest Rate		2%	2%	2%	2%
Uniform Amount per Interest Period		$742,520	$742,520	$742,520	$742,520
Factor Table		4.7135	4.7135	4.7135	1.0000
O&M Present Worth		$3,499,869	$3,499,869	$3,499,869	$742,520
Capital Costs		$3,345,620	$-	$ -	$ -
Present Worth Amount		$6,845,489	$3,499,869	$3,499,869	$742,520
Wastewater Total	**$14,587,746**				

Present Worth (Recycled)	**2010**	**2015**	**2020**	**2025**	**2030**
Interest Rate		2%	2%	2%	2%
Uniform Amount per Interest Period		$1,180,200	$1,428,000	$1,791,300	$1,763,440
Factor Table		4.7135	4.7135	4.7135	1.0000
O&M Present Worth		$5,562,873	$6,730,878	$8,443,293	$1,763,440
Capital Costs		$ -	$ -	$ -	$ -
Present Worth Amount		$5,562,873	$6,730,878	$8,443,293	$1,763,440
Recycled Total	**$22,500,483**				
Total	**$37,088,230**				

Table 5-14. Option A-3 – Annual O&M and Capital Costs

O&M Costs	2010	2015	2020	2025	2030
RW Cost (purchase Chula Vista)	$ -	$ -	$784,000	$1,568,000	$1,987,440
RW Cost (purchase SBWRF)	$1,034,880	$1,148,560	$572,320	$70,560	$ -
MWD/SDCWA Rebate	$(431,200)	$(431,200)	$ (431,200)	$(224,000)	$(224,000)
Metro Discharge Cost	$2,595,293	$2,873,360	$2,996,945	$3,367,701	$3,553,079
PLWWTP Upgrade Cost	$ -	$ -	$151,551	$170,299	$179,673
On-Site Solids Handling Power Cost [1]	$ -	$ -	$ -	$ -	$ -
On-Site Solids Handling Chemical Cost [1]	$ -	$ -	$ -	$ -	$ -
Power Cost [2]	$90,100	$90,100	$90,100	$90,100	$90,100
Chemical Cost [1]	$ -	$ -	$ -	$ -	$ -
Collection/Treatment/Operation [2]	$354,682	$354,682	$354,682	$354,682	$354,682
RWCWRF operating cost	$199,211	$199,211	$199,211	$199,211	$199,211
Capital Costs	**2010**	**2015**	**2020**	**2025**	**2030**
On-Site Solids Handling Cost [1]	$ -	$ -	$ -	$ -	$ -
PLWWTP Upgrade Cost	$ -	$ -	$5,956,828	$ -	$ -
Chula Vista Pump Station/Pipeline [3]	$ -	$ -	$3,960,000	$ -	$ -

[1] Based on Final RWCWRF Capital Cost Assessment 10-29-12.

[2] Based on Recycled and Sewer Cost Spreadsheet.

[3] 6 MGD Pump Station (600 hp), 8000 LF of Pipeline.

Table 5-15. Option A-3 – Present Worth of Wastewater and Recycled Water Costs

Present Worth (Wastewater)	**2010**	**2015**	**2020**	**2025**	**2030**
Interest Rate		2%	2%	2%	2%
Uniform Amount per Interest Period		$3,517,353	$3,792,489	$4,181,993	$4,376,746
Factor Table		4.7135	4.7135	4.7135	1.0000
O&M Present Worth		$16,579,042	$17,875,896	$19,711,826	$4,376,746
Capital Costs		$ -	$5,956,828	$ -	$ -
Present Worth Amount		$16,579,042	$23,832,723	$19,711,826	$ 4,376,746
Wastewater Total	**$64,500,337**				

Present Worth (Recycled)	**2010**	**2015**	**2020**	**2025**	**2030**
Interest Rate		2%	2%	2%	2%
Uniform Amount per Interest Period		$717,360	$925,120	$1,414,560	$1,763,440
Factor Table		4.7135	4.7135	4.7135	1.0000
O&M Present Worth		$3,381,276	$4,360,553	$6,667,529	$1,763,440
Capital Costs		$ -	$3,960,000	$ -	$ -
Present Worth Amount		$3,381,276	$8,320,553	$6,667,529	$1,763,440
Recycled Total	**$20,132,798**				
Total	**$84,633,135**				

Table 5-16. Option A-4 – Annual O&M and Capital Costs

O&M Costs	2010	2015	2020	2025	2030
RW Cost (purchase SBWRF)	$1,168,300	$1,611,400	$1,859,200	$2,015,300	$1,987,440
MWD/SDCWA Rebate	$(431,200)	$(431,200)	$(431,200)	$(224,000)	$(224,000)
Metro Discharge Cost	$2,595,293	$2,873,360	$2,996,945	$3,367,701	$3,553,079
PLWWTP Upgrade Cost	$ -	$ -	$151,551	$170,299	$79,673
On-Site Solids Handling Power Cost [1]	$ -	$ -	$ -	$ -	$ -
On-Site Solids Handling Chemical Cost [1]	$ -	$ -	$ -	$ -	$ -
Power Cost [2]	$90,100	$90,100	$90,100	$90,100	$90,100
Chemical Cost [1]	$ -	$ -	$ -	$ -	$ -
Collection/Treatment/Operation [2]	$354,682	$354,682	$354,682	$354,682	$354,682
RWCWRF Operating Cost [2]	$199,211	$199,211	$199,211	$199,211	$199,211
Capital Costs	**2010**	**2015**	**2020**	**2025**	**2030**
On-Site Solids Handling Cost [1]	$ -	$ -	$ -	$ -	$ -
PLWWTP Upgrade Cost	$ -	$ -	$5,956,828	$ -	$ -

[1] Based on Final RWCWRF Capital Cost Assessment 10-29-12.

[2] Based on Recycled and Sewer Cost Spreadsheet.

Table 5-17. Option A-4 – Present Worth of Wastewater and Recycled Water Costs

Present Worth (Wastewater)	**2010**	**2015**	**2020**	**2025**	**2030**
Interest Rate		2%	2%	2%	2%
Uniform Amount per Interest Period		$3,517,353	$3,792,489	$4,181,993	$4,376,746
Factor Table		4.7135	4.7135	4.7135	1.0000
O&M Present Worth		$16,579,042	$17,875,896	$19,711,826	$4,376,746
Capital Costs		$ -	$5,956,828	$ -	$ -
Present Worth Amount		$16,579,042	$23,832,723	$19,711,826	$4,376,746
Wastewater Total	**$64,500,337**				

Present Worth (Recycled)	**2010**	**2015**	**2020**	**2025**	**2030**
Interest Rate		2%	2%	2%	2%
Uniform Amount per Interest Period		$1,180,200	$1,428,000	$1,791,300	$1,763,440
Factor Table		4.7135	4.7135	4.7135	1.0000
O&M Present Worth		$5,562,873	$6,730,878	$8,443,293	$1,763,440
Capital Costs		$ -	$ -	$ -	$ -
Present Worth Amount		$5,562,873	$6,730,878	$8,443,293	$1,763,440
Recycled Total	**$22,500,483**				
Total	**$87,000,820**				

Table 5-18. Option A-5 – Annual O&M and Capital Costs

O&M Costs	2010	2015	2020	2025	2030
RW Cost (purchase Chula Vista)	$ -	$ -	$784,000	$1,568,000	$1,987,440
RW Cost (purchase SBWRF)	$1,034,880	$1,148,560	$572,320	$70,560	$ -
MWD/SDCWA Rebate	$(431,200)	$(431,200)	$(431,200)	$(224,000)	$(224,000)
Metro Discharge Cost	$2,595,293	$2,873,360	$2,996,945	$3,367,701	$3,553,079
PLWWTP Upgrade Cost	$ -	$ -	$ -	$ -	$ -
On-Site Solids Handling Power Cost [1]	$ -	$ -	$ -	$ -	$ -
On-Site Solids Handling Chemical Cost [1]	$ -	$ -	$ -	$ -	$ -
Power Cost [2]	$90,100	$90,100	$90,100	$90,100	$90,100
Chemical Cost [1]	$ -	$ -	$ -	$ -	$ -
Collection/Treatment/Operation [2]	$354,682	$354,682	$354,682	$354,682	$354,682
RWCWRF operating cost	$199,211	$199,211	$199,211	$199,211	$199,211
Capital Costs	**2010**	**2015**	**2020**	**2025**	**2030**
On-Site Solids Handling Cost [1]	$ -	$ -	$ -	$ -	$ -
PLWWTP Upgrade Cost	$ -	$ -	$ -	$ -	$ -
Chula Vista Pump Station/Pipeline [3]	$ -	$ -	$3,960,000	$ -	$ -

[1] Based on Final RWCWRF Capital Cost Assessment 10-29-12.

[2] Based on Recycled and Sewer Cost Spreadsheet.

[3] 6 MGD Pump Station (600 hp), 8000 LF of Pipeline.

Table 5-19. Option A-5 – Present Worth of Wastewater and Recycled Water Costs

Present Worth (Wastewater)	**2010**	**2015**	**2020**	**2025**	**2030**
Interest Rate		2%	2%	2%	2%
Uniform Amount per Interest Period		$3,517,353	$3,640,938	$4,011,694	$4,197,072
Factor Table		4.7135	4.7135	4.7135	1.0000
O&M Present Worth		$16,579,042	$17,161,562	$18,909,121	$4,197,072
Capital Costs		$ -	$ -	$ -	$ -
Present Worth Amount		$16,579,042	$17,161,562	$18,909,121	$4,197,072
Wastewater Total	**$56,846,797**				

Present Worth (Recycled)	**2010**	**2015**	**2020**	**2025**	**2030**
Interest Rate		2%	2%	2%	2%
Uniform Amount per Interest Period		$717,360	$925,120	$1,414,560	$1,763,440
Factor Table		4.7135	4.7135	4.7135	1.0000
O&M Present Worth		$3,381,276	$4,360,553	$6,667,529	$1,763,440
Capital Costs		$ -	$3,960,000	$ -	$ -
Present Worth Amount		$3,381,276	$8,320,553	$6,667,529	$1,763,440
Recycled Total	**$20,132,798**				
Total	**$76,979,595**				

Table 5-20. Option A-6 – Annual O&M and Capital Costs

O&M Costs	2010	2015	2020	2025	2030
RW Cost (purchase SBWRF)	$1,168,300	$1,611,400	$1,859,200	$2,015,300	$1,987,440
MWD/SDCWA Rebate	$(431,200)	$(431,200)	$(431,200)	$(224,000)	$(224,000)
Metro Discharge Cost	$2,595,293	$2,873,360	$2,996,945	$3,367,701	$3,553,079
PLWWTP Upgrade Cost	$ -	$ -	$ -	$ -	$ -
On-Site Solids Handling Power Cost [1]	$ -	$ -	$ -	$ -	$ -
On-Site Solids Handling Chemical Cost [1]	$ -	$ -	$ -	$ -	$ -
Power Cost [2]	$90,100	$90,100	$90,100	$90,100	$90,100
Chemical Cost [1]	$ -	$ -	$ -	$ -	-$ -
Collection/Treatment/Operation [2]	$354,682	$354,682	$354,682	$354,682	$354,682
RWCWRF Operating Cost [2]	$199,211	$ 199,211	$199,211	$199,211	$199,211

Capital Costs	2010	2015	2020	2025	2030
On-Site Solids Handling Cost [1]	$ -	$ -	$ -	$ -	$ -
PLWWTP Upgrade Cost	$ -	$ -	$ -	$ -	$ -

[1] Based on Final RWCWRF Capital Cost Assessment 10-29-12.

[2] Based on Recycled and Sewer Cost Spreadsheet.

Table 5-21. Option A-6 – Present Worth of Wastewater and Recycled Water Costs

Present Worth (Wastewater)	2010	2015	2020	2025	2030
Interest Rate		2%	2%	2%	2%
Uniform Amount per Interest Period		$3,517,353	$3,640,938	$4,011,694	$4,197,072
Factor Table		4.7135	4.7135	4.7135	1.0000
O&M Present Worth		$16,579,042	$17,161,562	$18,909,121	$4,197,072
Capital Costs		$ -	$ -	$ -	$ -
Present Worth Amount		$16,579,042	$17,161,562	$18,909,121	$4,197,072
Wastewater Total	**$56,846,797**				

Present Worth (Recycled)	2010	2015	2020	2025	2030
Interest Rate		2%	2%	2%	2%
Uniform Amount per Interest Period		$1,180,200	$1,428,000	$1,791,300	$1,763,440
Factor Table		4.7135	4.7135	4.7135	1.0000
O&M Present Worth		$5,562,873	$6,730,878	$ 8,443,293	$1,763,440
Capital Costs		$ -	$ -	$ -	$ -
Present Worth Amount		$5,562,873	$6,730,878	$8,443,293	$1,763,440
Recycled Total	**$22,500,483**				
Total	**$79,347,280**				

5.4.2 Present Worth Costs for Option B

Option B includes expansion of the RWCWRF to 2.6 MGD. The wastewater discharge and recycled water use projections indicated in Table 5-22 are different than projections for Option A. This table is for the on-site solids handling sub-option, which negates Metro discharge. The increased RWCWF capacity reduces the need to purchase as much recycled water from the SBWRP. There are three sub-options for this alternative. Tables 5-23 and 5-24 provide cost projections and present worth calculations for sub-option B-1. The present worth is $82.7 M. Sub-options B-2 and B-3 are for the no on-site solids handling facilities, which result in higher present worth costs. Tables 5-25 and 5-26 indicate cost values for sub-option B-2 at a total present worth of $93 M. Tables 5-27 and 5-28 indicate similar results for sub-option B-3. The present worth calculation difference is due to the impact of the Point Loma WWTP upgrade to secondary costs. Option B present worth costs are higher than Option A, but on-site solids handling is more cost-effective than continued discharge to Metro.

Table 5-22. Option B-1 – Projected Wastewater Discharge and Recycled Water Production Rates (MGD)

Wastewater	2010	2015	2020	2025	2030
Total Metro Discharge [1]	0.84	-	-	-	-
Total District WW Flow	1.84	1.93	1.97	2.09	2.15
Recycled	**2010**	**2015**	**2020**	**2025**	**2030**
RWCWRF Production [2]	1.000	2.340	2.340	2.340	2.340
Recycled Demand [3]	3.64	3.93	4.46	5.18	6.07
SBWRF Purchase	2.64	1.59	2.12	2.84	3.73
SBWRF Annual Contract Amount [4]	2.98	4.11	4.74	5.14	-

[1] Otay WD has a 1.231 MGD Metro capacity.

[2] Producing at 77% of Total RWCWRF Capacity in 2010. Producing at 90% of Total RWCWRF Capacity beginning in 2015.

[3] Based on Recycled Water Memo 06-08-12.

[4] Based on Recycled Purchase Agreement between City of San Diego and Otay WD.

Table 5-23. Option B-1 – Annual O&M and Capital Costs

O&M Costs	2010	2015	2020	2025	2030
RW Cost (purchase SBWRF)	$1,168,300	$1,611,400	$1,859,200	$2,015,300	$1,462,160
MWD/SDCWA Rebate	$(431,200)	$(1,009,008)	$(1,009,008)	$(524,160)	$(524,160)
Metro Discharge Cost	$2,595,293	$ -	$ -	$ -	$ -
PLWWTP Upgrade Cost	$ -	$ -	$ -	$ -	$ -
On-Site Solids Handling Power Cost [1]	$ -	$112,336	$112,336	$112,336	$112,336
On-Site Solids Handling Chemical Cost [1]	$ -	$84,718	$84,718	$84,718	$84,718
Power Cost [2]	$90,100	$559,263	$559,263	$559,263	$559,263
Chemical Cost [1]	$ -	$30,947	$30,947	$30,947	$30,947
Collection/Treatment/Operation [2]	$354,682	$1,504,221	$1,504,221	$1,504,221	$1,504,221
RWCWRF Operating Cost [2]	$199,211	$844,860	$844,860	$844,860	$844,860
Capital Costs	**2010**	**2015**	**2020**	**2025**	**2030**
On-Site Solids Handling Cost [1]	$ -	$5,483,107	$ -	$ -	$ -
Expansion/Upgrade Cost [1]	$ -	$14,966,588	$ -	$ -	$ -
PLWWTP Upgrade Cost	$ -	$-	$ -	$ -	$ -

[1] Based on Final RWCWRF Capital Cost Assessment 10-29-12.
[2] Based on Recycled and Sewer Cost Spreadsheet from the District.

Table 5-24. Option B-1 – Present Worth of Wastewater and Recycled Water Costs

Present Worth (Wastewater)	**2010**	**2015**	**2020**	**2025**	**2030**
Interest Rate		2%	2%	2%	2%
Uniform Amount per Interest Period		$3,136,346	$3,136,346	$3,136,346	$3,136,346
Factor Table		4.7135	4.7135	4.7135	1.0000
O&M Present Worth		$14,783,166	$14,783,166	$14,783,166	$3,136,346
Capital Costs		$20,449,695	$ -	$ -	$ -
Present Worth Amount		$35,232,861	$14,783,166	$14,783,166	$3,136,346
Wastewater Total	**$67,935,538**				

Present Worth (Recycled)	**2010**	**2015**	**2020**	**2025**	**2030**
Interest Rate		2%	2%	2%	2%
Uniform Amount per Interest Period		$602,392	$850,192	$1,491,140	$938,000
Factor Table		4.7135	4.7135	4.7135	1.0000
O&M Present Worth		$2,839,375	$4,007,380	$7,028,488	$938,000
Capital Costs		$ -	$ -	$ -	$ -
Present Worth Amount		$2,839,375	$4,007,380	$7,028,488	$938,000
Recycled Total	**$14,813,243**				
Total	**$82,748,781**				

Table 5-25. Option B-2 – Annual O&M and Capital Costs

O&M Costs	2010	2015	2020	2025	2030
RW Cost (purchase SBWRF)	$1,168,300	$1,611,400	$1,859,200	$2,015,300	$1,462,160
MWD/SDCWA Rebate	$(431,200)	$(1,009,008)	$(1,009,008)	$(524,160)	$(524,160)
Metro Discharge Cost	$2,595,293	$803,305	$803,305	$803,305	$803,305
PLWWTP Upgrade Cost	$ -	$ -	$40,622	$40,622	$40,622
On-Site Solids Handling Power Cost [1]	$ -	$ -	$ -	$ -	$ -
On-Site Solids Handling Chemical Cost [1]	$ -	$ -	$ -	$ -	$ -
Power Cost [2]	$90,100	$559,263	$559,263	$559,263	$559,263
Chemical Cost [1]	$ -	$30,947	$30,947	$30,947	$30,947
Collection/Treatment/Operation [2]	$354,682	$1,504,221	$1,504,221	$1,504,221	$1,504,221
RWCWRF Operating Cost [2]	$199,211	$844,860	$844,860	$844,860	$844,860
Capital Costs					
On-Site Solids Handling Cost [1]	$ -	$ -	$ -	$ -	$ -
Enhancement/Upgrade Cost [1]	$ -	$14,966,588	$ -	$ -	$ -
PLWWTP Upgrade Cost	$ -	$ -	$5,956,828	$ -	$ -

[1] Based on Final RWCWRF Capital Cost Assessment 10-29-12.

[2] Based on Recycled and Sewer Cost Spreadsheet.

Table 5-26. Option B-2 – Present Worth of Wastewater and Recycled Water Costs

Present Worth (Wastewater)	**2010**	**2015**	**2020**	**2025**	**2030**
Interest Rate		2%	2%	2%	2%
Uniform Amount per Interest Period		$3,742,597	$3,783,218	$3,783,218	$3,783,218
Factor Table		4.7135	4.7135	4.7135	1.0000
O&M Present Worth		$17,640,729	$17,832,200	$17,832,200	$3,783,218
Capital Costs		$14,966,588	$5,956,828	$ -	$ -
Present Worth Amount		$32,607,317	$23,789,028	$17,832,200	$3,783,218
Wastewater Total	**$78,011,763**				

Present Worth (Recycled)	**2010**	**2015**	**2020**	**2025**	**2030**
Interest Rate		2%	2%	2%	2%
Uniform Amount per Interest Period		$602,392	$850,192	$1,491,140	$938,000
Factor Table		4.7135	4.7135	4.7135	1.0000
O&M Present Worth		$2,839,375	$4,007,380	$7,028,488	$938,000
Capital Costs		$ -	$ -	$ -	$ -
Present Worth Amount		$2,839,375	$4,007,380	$7,028,488	$938,000
Recycled Total	**$14,813,243**				
Total	**$92,825,006**				

Table 5-27. Option B-3 – Annual O&M and Capital Costs

O&M Costs	2010	2015	2020	2025	2030
RW Cost (purchase SBWRF)	$1,168,300	$1,611,400	$1,859,200	$2,015,300	$1,462,160
MWD/SDCWA Rebate	$(431,200)	$(1,009,008)	$(1,009,008)	$(524,160)	$(524,160)
Metro Discharge Cost	$2,595,293	$803,305	$803,305	$803,305	$803,305
PLWWTP Upgrade Cost	$ -	$ -	$ -	$ -	$ -
On-Site Solids Handling Power Cost [1]	$ -	$ -	$ -	$ -	$ -
On-Site Solids Handling Chemical Cost [1]	$ -	$ -	$ -	$ -	$ -
Power Cost [2]	$90,100	$559,263	$559,263	$559,263	$559,263
Chemical Cost [1]	$ -	$30,947	$30,947	$30,947	$30,947
Collection/Treatment/Operation [2]	$354,682	$1,504,221	$1,504,221	$1,504,221	$1,504,221
RWCWRF Operating Cost [2]	$199,211	$844,860	$844,860	$844,860	$844,860
Capital Costs					
On-Site Solids Handling Cost [1]	$ -	$ -	$ -	$ -	$ -
Enhancement/Upgrade Cost [1]	$ -	$14,966,588	$ -	$ -	$ -
PLWWTP Upgrade Cost	$ -	$ -	$ -	$ -	$ -

[1] Based on Final RWCWRF Capital Cost Assessment 10-29-12.

[2] Based on Recycled and Sewer Cost Spreadsheet.

Table 5-28. Option B-3 – Present Worth of Wastewater and Recycled Water Costs

Present Worth (Wastewater)	**2010**	**2015**	**2020**	**2025**	**2030**
Interest Rate		2%	2%	2%	2%
Uniform Amount per Interest Period		$3,742,597	$3,742,597	$3,742,597	$3,742,597
Factor Table		4.7135	4.7135	4.7135	1.0000
O&M Present Worth		$17,640,729	$17,640,729	$17,640,729	$3,742,597
Capital Costs		$14,966,588	$ -	$ -	$ -
Present Worth Amount		$32,607,317	$17,640,729	$17,640,729	$3,742,597
Wastewater Total	**$71,631,372**				

Present Worth (Recycled)	**2010**	**2015**	**2020**	**2025**	**2030**
Interest Rate		2%	2%	2%	2%
Uniform Amount per Interest Period		$602,392	$850,192	$1,491,140	$938,000
Factor Table		4.7135	4.7135	4.7135	1.0000
O&M Present Worth		$2,839,375	$4,007,380	$7,028,488	$938,000
Capital Costs		$ -	$ -	$ -	$ -
Present Worth Amount		$2,839,375	$4,007,380	$7,028,488	$938,000
Recycled Total	**$14,813,243**				
Total	$86,444,615				

5.4.3 Present Worth Costs for Option C

Option C includes expansion of the RWCWRF to 3.9 MGD. The wastewater discharge and recycled water use projections indicated in Table 5-29 are different than projections for Options A and B. This table is for the on-site solids handling sub-option, which negates Metro discharge. The increased RWCWF capacity reduces the need to purchase as much recycled water from the SBWRP. There are three sub-options for this alternative. Tables 5-30 and 5-31 provide cost projections and present worth calculations for sub-option C-1. The present worth is $134.3 M. Sub-options C-2 and C-3 are for the no on-site solids handling facilities, which result in higher present worth costs. Table 5-32 shows the projected wastewater flows and recycled water sources and amounts for sub-option C-2. Tables 5-33 and 5-34 indicate cost values for sub-option C-2 at a total present worth of $146 M. Tables 5-35 and 5-36 indicate similar results for sub-option C-3. The present worth calculation difference is due to the impact of the Point Loma WWTP upgrade to secondary costs. Option C present worth costs are higher than Option A and B, but on-site solids handling is more cost-effective than continued discharge to Metro.

Table 5-29. Option C-1 – Projected Wastewater Discharge and Recycled Water Production Rates (MGD)- On-site Solids Handling

Wastewater	2010	2015	2020	2025	2030
Total Metro Discharge [1]	0.84	-	-	-	-
Total District WW Flow	1.84	1.93	1.97	2.09	2.15
Recycled	**2010**	**2015**	**2020**	**2025**	**2030**
RWCWRF Production [2]	1.000	3.510	3.510	3.510	3.510
Recycled Demand [3]	3.64	3.93	4.46	5.18	6.07
SBWRF Purchase	2.64	0.42	0.95	1.67	2.56
SBWRF Annual Contract Amount [4]	2.98	4.11	4.74	5.14	-

[1] Otay WD has a 1.231 MGD Metro capacity.

[2] Producing 77% of Total RWCWRF Capacity.

[3] Based on Recycled Water Memo 06-08-12.

[4] Based on Recycled Purchase Agreement between City of San Diego and Otay WD.

Table 5-30: Option C-1 – Annual O&M and Capital Costs

O&M Costs	2010	2015	2020	2025	2030
RW Cost (purchase SBWRF)	$1,168,300	$1,611,400	$1,859,200	$2,015,300	$1,003,520
MWD/SDCWA Rebate	($431,200)	($1,513,512)	($1,513,512)	($786,240)	($786,240)
Metro Discharge Cost	$2,595,293	$0	$0	$0	$0
PLWWTP Upgrade Cost	$0	$0	$0	$0	$0
On-Site Solids Handling Power Cost [1]	$0	$168,504	$168,504	$168,504	$168,504
On-Site Solids Handling Chemical Cost [1]	$0	$127,077	$127,077	$127,077	$127,077
Power Cost [2]	$90,100	$1,197,130	$1,197,130	$1,197,130	$1,197,130
Chemical Cost [1]	$0	$77,081	$77,081	$77,081	$77,081
Collection/Treatment/Operation [2]	$354,682	$2,999,394	$2,999,394	$2,999,394	$2,999,394
RWCWRF Operating Cost [2]	$199,211	$1,684,638	$1,684,638	$1,684,638	$1,684,638
Capital Costs					
On-Site Solids Handling Cost [1]	$0	$8,324,288	$0	$0	$0
Enhancement/Upgrade Cost [1]	$0	$23,199,403	$0	$0	$0
PLWWTP Upgrade Cost	$0	$0	$0	$0	$0

[1] Based on Final RWCWRF Capital Cost Assessment 10-29-12.

[2] Based on Recycled and Sewer Cost Spreadsheet.

Table 5-31. Option C-1 – Present Worth of Wastewater and Recycled Water Costs

Present Worth (Wastewater)	**2015**	**2020**	**2025**	**2030**
Interest Rate	2%	2%	2%	2%
Uniform Amount per Interest Period	$6,253,824	$6,253,824	$6,253,824	$6,253,824
Factor Table	4.7135	4.7135	4.7135	1.0000
O&M Present Worth	$29,477,400	$29,477,400	$29,477,400	$6,253,824
Capital Costs	$31,523,691	$0	$0	$0
Present Worth Amount	$61,001,091	$29,477,400	$29,477,400	$6,253,824
Wastewater Total	**$126,209,714**			

Present Worth (Recycled)	**2015**	**2020**	**2025**	**2030**
Interest Rate	2%	2%	2%	2%
Uniform Amount per Interest Period	$97,888	$345,688	$1,229,060	$217,280
Factor Table	4.7135	4.7135	4.7135	1.0000
O&M Present Worth	$461,395	$1,629,400	$5,793,174	$217,280
Capital Costs	$0	$0	$0	$0
Present Worth Amount	$461,395	$1,629,400	$5,793,174	$217,280
Recycled Total	**$8,101,250**			
Total	**$134,310,963**			

Table 5-32. Option C-2 – Projected Wastewater Discharge and Recycled Water Production Rates (MGD)- No On-site Solids Handling

Wastewater	2010	2015	2020	2025	2030
Total Metro Discharge [1]	0.84	0.39	0.39	0.39	0.39
Total District WW Flow	1.84	1.93	1.97	2.09	2.15
Recycled	**2010**	**2015**	**2020**	**2025**	**2030**
RWCWRF Production [2]	1.000	3.510	3.510	3.510	3.510
Recycled Demand [3]	3.64	3.93	4.46	5.18	6.07
SBWRF Purchase	2.64	0.42	0.95	1.67	2.56
SBWRF Annual Contract Amount [4]	2.98	4.11	4.74	5.14	-

[1] Otay WD has a 1.231 MGD Metro capacity.

[2] Producing 77% of Total RWCWRF Capacity.

[3] Based on Recycled Water Memo 06-08-12.

[4] Based on Recycled Purchase Agreement between City of San Diego and Otay WD.

Table 5-33. Option C-2 – Annual O&M and Capital Costs

O&M Costs	2010	2015	2020	2025	2030
RW Cost (purchase SBWRF)	$1,168,300	$1,611,400	$1,859,200	$2,015,300	$1,003,520
MWD/SDCWA Rebate	($431,200)	($1,513,512)	($1,513,512)	($786,240)	($786,240)
Metro Discharge Cost	$2,595,293	$1,204,957	$1,204,957	$1,204,957	$1,204,957
PLWWTP Upgrade Cost	$0	$0	$60,933	$60,933	$60,933
On-Site Solids Handling Power Cost [1]	$0	$0	$0	$0	$0
On-Site Solids Handling Chemical Cost [1]	$0	$0	$0	$0	$0
Power Cost [2]	$90,100	$1,197,130	$1,197,130	$1,197,130	$1,197,130
Chemical Cost [1]	$0	$77,081	$77,081	$77,081	$77,081
Collection/Treatment/Operation [2]	$354,682	$2,999,394	$2,999,394	$2,999,394	$2,999,394
RWCWRF Operating Cost [2]	$199,211	$1,684,638	$1,684,638	$1,684,638	$1,684,638
Capital Costs					
On-Site Solids Handling Cost [1]	$0		$0	$0	$0
Enhancement/Upgrade Cost [1]	$0	$23,199,403	$0	$0	$0
PLWWTP Upgrade Cost	$0	$0	$5,956,828	$0	$0

[1] Based on Final RWCWRF Capital Cost Assessment 10-29-12.

[2] Based on Recycled and Sewer Cost Spreadsheet.

Table 5-34. Option C-2 – Present Worth of Wastewater and Recycled Water Costs

Present Worth (Wastewater)	2015	2020	2025	2030
Interest Rate	2%	2%	2%	2%
Uniform Amount per Interest Period	$7,163,200	$7,224,133	$7,224,133	$7,224,133
Factor Table	4.7135	4.7135	4.7135	1.0000
O&M Present Worth	$33,763,745	$34,050,951	$34,050,951	$7,224,133
Capital Costs	$23,199,403	$5,956,828	$0	$0
Present Worth Amount	$56,963,148	$40,007,778	$34,050,951	$7,224,133
Wastewater Total	**$138,246,010**			

Present Worth (Recycled)	2015	2020	2025	2030
Interest Rate	2%	2%	2%	2%
Uniform Amount per Interest Period	$97,888	$345,688	$1,229,060	$217,280
Factor Table	4.7135	4.7135	4.7135	1.0000
O&M Present Worth	$461,395	$1,629,400	$5,793,174	$217,280
Capital Costs	$0	$0	$0	$0
Present Worth Amount	$461,395	$1,629,400	$5,793,174	$217,280
Recycled Total	**$8,101,250**			
Total	**$146,347,260**			

Table 5-35. Option C-3 – Annual O&M and Capital Costs

O&M Costs	2010	2015	2020	2025	2030
RW Cost (purchase SBWRF)	$1,168,300	$1,611,400	$1,859,200	$2,015,300	$1,003,520
MWD/SDCWA Rebate	($431,200)	($1,513,512)	($1,513,512)	($786,240)	($786,240)
Metro Discharge Cost	$2,595,293	$1,204,957	$1,204,957	$1,204,957	$1,204,957
PLWWTP Upgrade Cost	$0	$0	$60,933	$60,933	$60,933
On-Site Solids Handling Power Cost [1]	$0	$0	$0	$0	$0
On-Site Solids Handling Chemical Cost [1]	$0	$0	$0	$0	$0
Power Cost [2]	$90,100	$1,197,130	$1,197,130	$1,197,130	$1,197,130
Chemical Cost [1]	$0	$77,081	$77,081	$77,081	$77,081
Collection/Treatment/Operation [2]	$354,682	$2,999,394	$2,999,394	$2,999,394	$2,999,394
RWCWRF Operating Cost [2]	$199,211	$1,684,638	$1,684,638	$1,684,638	$1,684,638
Capital Costs					
On-Site Solids Handling Cost [1]	$0	$0	$0	$0	$0
Enhancement/Upgrade Cost [1]	$0	$23,199,403	$0	$0	$0
PLWWTP Upgrade Cost	$0	$0	$5,956,828	$0	$0

[1] Based on Final RWCWRF Capital Cost Assessment 10-29-12.

[2] Based on Recycled and Sewer Cost Spreadsheet.

Table 5-36. Option C-3 – Present Worth of Wastewater and Recycled Water Costs

Present Worth (Wastewater)	2015	2020	2025	2030
Interest Rate	2%	2%	2%	2%
Uniform Amount per Interest Period	$7,163,200	$7,163,200	$7,163,200	$7,163,200
Factor Table	4.7135	4.7135	4.7135	1.0000
O&M Present Worth	$33,763,745	$33,763,745	$33,763,745	$7,163,200
Capital Costs	$23,199,403	$0	$0	$0
Present Worth Amount	$56,963,148	$33,763,745	$33,763,745	$7,163,200
Wastewater Total	**$131,653,837**			

Present Worth (Recycled)	2015	2020	2025	2030
Interest Rate	2%	2%	2%	2%
Uniform Amount per Interest Period	$97,888	$345,688	$1,229,060	$217,280
Factor Table	4.7135	4.7135	4.7135	1.0000
O&M Present Worth	$461,395	$1,629,400	$5,793,174	$217,280
Capital Costs	$0	$0	$0	$0
Present Worth Amount	$461,395	$1,629,400	$5,793,174	$217,280
Recycled Total	**$8,101,250**			
Total	**$139,755,087**			

5.4.4 Present Worth Costs for Option D

Option D includes demolition and abandonment of the RWCWRF in favor of complete reliance on Metro for wastewater disposal and treatment. Present worth costs for the four sub-options in Option D are higher than costs for all other options. The sub-options are differentiated by recycled water supplies (SBWRP or Chula Vista) and District payment of Point Loma upgrade costs or not. The presumed wastewater discharge and indicated recycled water use projections in Table 5-37 are different than projections for Options A, B, and C. This table indicates recycled water purchase from Chula Vista and presumes discharge of all wastewater to Metro. Tables 5-38 and 5-39 provide cost projections and present worth calculations for sub-option D-1. The present worth is $166.1 M. Sub-option D-2 costs are shown in Tables 5-40 and 5-41. The present worth calculation for sub-option D-2 is about $157 M. An alternative projected wastewater flow and recycled water source projection is indicated in Table 5-42 for continued recycled water purchase from SBWRP. Tables 5-43 and 5-44 indicate cost values for sub-option D-3 at a total present worth of $163 M. Tables 5-45 and 5-46 indicate a $10M difference in present worth costs due to the impact of assuming Point Loma upgrade costs. The sub-option D-4 present worth is $153.7 M.

Table 5-37. Option D-1 and D-2 – Projected Wastewater Discharge and Recycled Water Production Rates (MGD) – Includes Chula Vista Recycled Water Purchase

Recycled	2010	2015	2020	2025	2030
Chula Vista Available [1]	-	-	2.00	4.00	6.00
Chula Vista Purchase	-	-	2.00	4.00	6.00
SBWRF Purchase	3.64	3.93	2.46	1.18	0.07

[1] Based on City of Chula Vista's Acquisition of Additional Wastewater Capacity Project Final Report April 2012

Table 5-38. Option D-1 – Annual O&M and Capital Costs

O&M Costs	2010	2015	2020	2025	2030
RW Cost (purchase Chula Vista)	$0	$0	$784,000	$1,568,000	$2,352,000
RW Cost (purchase SBWRF)	$1,426,880	$1,540,560	$964,320	$462,560	$27,440
Metro Discharge Cost	$5,684,927	$5,962,994	$6,086,579	$6,457,335	$6,642,713
PLWWTP Upgrade Cost	$0	$0	$0	$0	$0
On-Site Solids Handling Power Cost [1]	$0	$0	$0	$0	$0
On-Site Solids Handling Chemical Cost [1]	$0	$0	$0	$0	$0
Power Cost [2]	$0	$0	$0	$0	$0
Chemical Cost [1]	$0	$0	$0	$0	$0
Collection/Treatment/Operation [2]	$0	$0	$0	$0	$0
RWCWRF Operating Cost [2]	$0	$0	$0	$0	$0
Capital Costs	**2010**	**2015**	**2020**	**2025**	**2030**
Decommission/Demolition cost [1]	$0	$3,955,800	$0	$0	$0
PLWWTP Upgrade Cost	$0	$0	$0	$0	$0
Additional Metro Cost [2]	$0	$0	$0	$0	$27,570,000
Chula Vista Pump Station/Pipeline [3]	$0	$0	$3,960,000	$0	$0

[1] Based on Final RWCWRF Capital Cost Assessment 10-29-12.

[2] Per discussion with Rita Bell. $22 Million paid to Metro, $8 Million paid to the County.

[3] 6 MGD Pump Station (600 hp), 8000 LF of Pipeline.

Table 5-39. Option D-1 – Present Worth of Wastewater and Recycled Water Costs

Present Worth (Wastewater)	**2015**	**2020**	**2025**	**2030**
Interest Rate	2%	2%	2%	2%
Uniform Amount per Interest Period	$5,962,994	$6,394,367	$6,783,872	$6,978,624
Factor Table	4.7135	4.7135	4.7135	1.0000
O&M Present Worth	$28,106,570	$30,139,850	$31,975,780	$6,978,624
Capital Costs	$3,955,800	$5,956,828	$0	$27,570,000
Present Worth Amount	$32,062,370	$36,096,678	$31,975,780	$34,548,624
Wastewater Total	**$134,683,453**			

Present Worth (Recycled)	**2015**	**2020**	**2025**	**2030**
Interest Rate	2%	2%	2%	2%
Uniform Amount per Interest Period	$1,540,560	$1,748,320	$2,030,560	$2,379,440
Factor Table	4.7135	4.7135	4.7135	1.0000
O&M Present Worth	$7,261,430	$8,240,706	$9,571,045	$2,379,440
Capital Costs	$0	$3,960,000	$0	$0
Present Worth Amount	$7,261,430	$12,200,706	$9,571,045	$2,379,440
Recycled Total	**$31,412,620**			
Total	**$166,096,074**			

Table 5-40. Option D-2 – Annual O&M and Capital Costs

O&M Costs	2010	2015	2020	2025	2030
RW Cost (purchase Chula Vista)	$0	$0	$784,000	$1,568,000	$2,352,000
RW Cost (purchase SBWRF)	$1,426,880	$1,540,560	$964,320	$462,560	$27,440
Metro Discharge Cost	$5,684,927	$5,962,994	$6,086,579	$6,457,335	$6,642,713
PLWWTP Upgrade Cost	$0	$0	$0	$0	$0
On-Site Solids Handling Power Cost [1]	$0	$0	$0	$0	$0
On-Site Solids Handling Chemical Cost [1]	$0	$0	$0	$0	$0
Power Cost [2]	$0	$0	$0	$0	$0
Chemical Cost [1]	$0	$0	$0	$0	$0
Collection/Treatment/Operation [2]	$0	$0	$0	$0	$0
RWCWRF Operating Cost [2]	$0	$0	$0	$0	$0
Capital Costs	**2010**	**2015**	**2020**	**2025**	**2030**
Decommission/Demolition cost [1]	$0	$3,955,800	$0	$0	$0
PLWWTP Upgrade Cost	$0	$0	$0	$0	$0
Additional Metro Cost [2]	$0	$0	$0	$0	$27,570,000
Chula Vista Pump Station/Pipeline [3]	$0	$0	$3,960,000	$0	$0

[1] Based on Final RWCWRF Capital Cost Assessment 10-29-12.

[2] $22 Million paid to Metro, $8 Million paid to the County per MGD of capacity.

[3] 6 MGD Pump Station (600 hp), 8000 LF of Pipeline.

Table 5-41. Option D-2 – Present Worth of Wastewater and Recycled Water Costs

Present Worth (Wastewater)	**2015**	**2020**	**2025**	**2030**
Interest Rate	2%	2%	2%	2%
Uniform Amount per Interest Period	$5,962,994	$6,086,579	$6,457,335	$6,642,713
Factor Table	4.7135	4.7135	4.7135	1.0000
O&M Present Worth	$28,106,570	$28,689,090	$30,436,649	$6,642,713
Capital Costs	$3,955,800	$0	$0	$27,570,000
Present Worth Amount	$32,062,370	$28,689,090	$30,436,649	$34,212,713
Wastewater Total	**$125,400,822**			

Present Worth (Recycled)	**2015**	**2020**	**2025**	**2030**
Interest Rate	2%	2%	2%	2%
Uniform Amount per Interest Period	$1,540,560	$1,748,320	$2,030,560	$2,379,440
Factor Table	4.7135	4.7135	4.7135	1.0000
O&M Present Worth	$7,261,430	$8,240,706	$9,571,045	$2,379,440
Capital Costs	$0	$3,960,000	$0	$0
Present Worth Amount	$7,261,430	$12,200,706	$9,571,045	$2,379,440
Recycled Total	**$31,412,620**			
Total	**$156,813,443**			

Table 5-42. Option D-3 and D-4 – Projected Wastewater Discharge and Recycled Water Production Rates (MGD)

Wastewater	2010	2015	2020	2025	2030
Total Metro Discharge [1]	1.84	1.93	1.97	2.09	2.15
Total District WW Flow	1.84	1.93	1.97	2.09	2.15
Recycled	**2010**	**2015**	**2020**	**2025**	**2030**
Recycled Demand [2]	3.64	3.93	4.46	5.18	6.07
SBWRF Purchase	3.64	3.93	4.46	5.18	6.07
SBWRF Annual Contract Amount [3]	2.98	4.11	4.74	5.14	-

[1] Otay WD has a 1.231 MGD Metro capacity.

[2] Based on Recycled Water Memo 06-08-12.

[3] Based on Recycled Purchase Agreement between City of San Diego and Otay WD.

Table 5-43. Option D-3 – Annual O&M and Capital Costs

O&M Costs	2010	2015	2020	2025	2030
RW Cost (purchase SBWRF)	$1,426,880	$1,611,400	$1,859,200	$2,030,560	$2,379,440
Metro Discharge Cost	$5,684,927	$5,962,994	$6,086,579	$6,457,335	$6,642,713
PLWWTP Upgrade Cost	$0	$0	$307,788	$326,537	$335,911
On-Site Solids Handling Power Cost [1]	$0	$0	$0	$0	$0
On-Site Solids Handling Chemical Cost [1]	$0	$0	$0	$0	$0
Power Cost [2]	$0	$0	$0	$0	$0
Chemical Cost [1]	$0	$0	$0	$0	$0
Collection/Treatment/Operation [2]	$0	$0	$0	$0	$0
RWCWRF Operating Cost [2]	$0	$0	$0	$0	$0
Capital Costs	**2010**	**2015**	**2020**	**2025**	**2030**
Decommission/Demolition cost [1]	$0	$3,955,800	$0	$0	$0
PLWWTP Upgrade Cost	$0	$0	$5,956,828	$0	$0
Additional Metro Cost [2]	$0	$0	$0	$0	$27,570,000

[1] Based on Final RWCWRF Capital Cost Assessment 10-29-12.

[2] Per discussion with District staff, $22 Million per MGD capacity paid to Metro.

Table 5-44. Option D-3 – Present Worth of Wastewater and Recycled Water Costs

Present Worth (Wastewater)	**2015**	**2020**	**2025**	**2030**
Interest Rate	2%	2%	2%	2%
Uniform Amount per Interest Period	$5,962,994	$6,394,367	$6,783,872	$6,978,624
Factor Table	4.7135	4.7135	4.7135	1.0000
O&M Present Worth	$28,106,570	$30,139,850	$31,975,780	$6,978,624
Capital Costs	$3,955,800	$5,956,828	$0	$27,570,000
Present Worth Amount	$32,062,370	$36,096,678	$31,975,780	$34,548,624
Wastewater Total	**$134,683,453**			

Present Worth (Recycled)	**2015**	**2020**	**2025**	**2030**
Interest Rate	2%	2%	2%	2%
Uniform Amount per Interest Period	$1,611,400	$1,859,200	$2,030,560	$2,379,440
Factor Table	4.7135	4.7135	4.7135	1.0000
O&M Present Worth	$7,595,334	$8,763,339	$9,571,045	$2,379,440
Capital Costs	$0	$0	$0	$0
Present Worth Amount	$7,595,334	$8,763,339	$9,571,045	$2,379,440
Recycled Total	**$28,309,158**			
Total	**$162,992,611**			

Table 5-45. Option D-4 – Annual O&M and Capital Costs

O&M Costs	2010	2015	2020	2025	2030
RW Cost (purchase SBWRF)	$1,426,880	$1,611,400	$1,859,200	$2,030,560	$2,379,440
Metro Discharge Cost	$5,684,927	$5,962,994	$6,086,579	$6,457,335	$6,642,713
PLWWTP Upgrade Cost	$ -	$ -	$ -	$ -	$ -
On-Site Solids Handling Power Cost [1]	$ -	$ -	$ -	$ -	$ -
On-Site Solids Handling Chemical Cost [1]	$ -	$ -	$ -	$ -	$ -
Power Cost [2]	$ -	$ -	$ -	$ -	$ -
Chemical Cost [1]	$ -	$ -	$ -	$ -	$ -
Collection/Treatment/Operation [2]	$ -	$ -	$ -	$ -	$ -
RWCWRF Operating Cost [2]	$ -	$ -	$ -	$ -	$ -
Capital Costs	**2010**	**2015**	**2020**	**2025**	**2030**
Decommission/Demolition cost [1]	$ -	$3,955,800	$ -	$ -	$ -
PLWWTP Upgrade Cost	$ -	$ -	$ -	$ -	$ -
Additional Metro Cost [2]	$ -	$ -	$ -	$ -	$27,570,000

[1] Based on Final RWCWRF Capital Cost Assessment 10-29-12.

[2] Per discussion with Rita Bell. $22 Million paid to Metro, $8 Million paid to the County.

Table 5-46. Option D-4 – Present Worth of Wastewater and Recycled Water Costs

Present Worth (Wastewater)	**2015**	**2020**	**2025**	**2030**
Interest Rate	2%	2%	2%	2%
Uniform Amount per Interest Period	$5,962,994	$6,086,579	$6,457,335	$6,642,713
Factor Table	4.7135	$5	4.7135	1.0000
O&M Present Worth	$28,106,570	$28,689,090	$30,436,649	$6,642,713
Capital Costs	$3,955,800	$0	$0	$27,570,000
Present Worth Amount	$32,062,370	$28,689,090	$30,436,649	$34,212,713
Wastewater Total	**$125,400,822**			

Present Worth (Recycled)	**2015**	**2020**	**2025**	**2030**
Interest Rate	2%	2%	2%	2%
Uniform Amount per Interest Period	$1,611,400	$1,859,200	$2,030,560	$2,379,440
Factor Table	4.7135	4.7135	4.7135	$1
O&M Present Worth	$7,595,334	$8,763,339	$9,571,045	$2,379,440
Capital Costs	$0	$0	$0	$0
Present Worth Amount	$7,595,334	$8,763,339	$9,571,045	$2,379,440
Recycled Total	**$28,309,158**			
Total	**$153,709,980**			

5.4.5 Present Worth Costs for Option E

Option E includes demolition and abandonment of RWCWRF and partnership with San Diego County in a new conceptualized wastewater treatment and water reclamation plant. There are two sub-options associated with Option E which are for Point Loma upgrade to secondary or not. The new plant is assumed to be a similar treatment process as Chula Vista (MBR) at similar cost per MGD capacity. The plant is presumed to have on-site solids handling in that the concept proposes an NPDES permit to the Sweetwater River. The District's share of the new plant capacity and cost is about 22 percent based on flow projections shown in Table 5-47. Tables 5-48 and 5-49 provide cost projections and present worth calculations for sub-option E-1. The present worth is $154 M. Tables 5-50 and 5-51 indicate cost values for sub-option E-2 at a total present worth of $148 M. The concept and projected costs for Option E carry the most risk, in that details on the proposed new plant are not developed. The present worth calculation difference is due to the impact of the Point Loma WWTP upgrade to secondary costs. Option E present worth costs are higher than Options A, B, and C, but less than complete reliance on Metro.

Table 5-47. Option E-1 and E-2 – Projected Wastewater Discharge and Recycled Water Production Rates (MGD)

Wastewater	2010	2015	2020	2025	2030
Total Metro Discharge [1]	1.84	1.93	-	-	-
Total District WW Flow	1.84	1.93	1.97	2.09	2.15
Recycled	**2010**	**2015**	**2020**	**2025**	**2030**
Joint Project Production	-	-	6.00	8.00	10.00
Joint Project Purchase	-	-	1.97	2.09	2.15
Recycled Demand [2]	3.64	3.93	4.46	5.18	6.07
SBWRF Purchase	3.64	3.93	2.49	3.09	3.92
SBWRF Annual Contract Amount [3]	2.98	4.11	4.74	5.14	-

[1] Otay WD has a 1.231 MGD Metro capacity.

[2] Based on Recycled Water Memo 06-08-12.

[3] Based on Recycled Purchase Agreement between City of San Diego and Otay WD.

Table 5-48. Option E-1 – Annual O&M and Capital Costs

O&M Costs	2010	2015	2020	2025	2030
RW Cost (purchase Joint Project)	$0	$0	$772,240	$819,280	$842,800
RW Cost (purchase SBWRF)	$1,426,880	$1,611,400	$1,859,200	$2,015,300	$1,536,640
Metro Discharge Cost	$5,684,927	$5,962,994	$0	$0	$0
PLWWTP Upgrade Cost	$0	$0	$0	$0	$0
Joint Project Cost (22%) [1]	$0	$0	$906,583	$1,530,083	$2,150,000
Capital Costs	**$2,010**	**$2,015**	**$2,020**	**$2,025**	**$2,030**
Total Joint Project Cost [1]	$0	$0	$119,066,667	$34,933,333	$37,466,667
Otay Joint Project Cost (22%) [1]	$0	$0	$25,599,333	$7,510,667	$8,055,333
Decommission/Demolition cost [1]	$0	$3,955,800	$0	$0	$0
Additional Metro Cost [2]	$0	$20,970,000	$0	$0	$0
PLWWTP Upgrade Cost	$0	$0	$5,956,828	$0	$0
Joint Project Pump Station/Pipeline [3]	$0	$0	$4,440,000	$0	$0

[1] Based on City of Chula Vista's Acquisition of Additional Wastewater Capacity Project Final Report April 2012

[2] Per discussion with District staff, $22 Million paid to Metro and $8 Million paid to the County per MGD of capacity.

[3] 10 MGD Pump Station (900 hp), 7000 LF of Pipeline.

Table 5-49. Option E-1 – Present Worth of Wastewater and Recycled Water Costs

Present Worth (Wastewater)	2015	2020	2025	2030
Interest Rate	2%	2%	2%	2%
Uniform Amount per Interest Period	$5,962,994	$906,583	$1,530,083	$2,150,000
Factor Table	4.7135	4.7135	4.7135	1.0000
O&M Present Worth	$28,106,570	$4,273,181	$7,212,048	$2,150,000
Capital Costs	$24,925,800	$31,556,161	$7,510,667	$8,055,333
Present Worth Amount	$53,032,370	$35,829,342	$14,722,715	$10,205,333
Wastewater Total	**$113,789,760**			
Present Worth (Recycled)	**2015**	**2020**	**2025**	**2030**
Interest Rate	2%	2%	2%	2%
Uniform Amount per Interest Period	$1,611,400	$2,631,440	$2,834,580	$2,379,440
Factor Table	4.7135	4.7135	4.7135	1.0000
O&M Present Worth	$7,595,334	$12,403,292	$13,360,793	$2,379,440
Capital Costs	$0	$4,440,000	$0	$0
Present Worth Amount	$7,595,334	$16,843,292	$13,360,793	$2,379,440
Recycled Total	**$40,178,859**			
Total	**$153,968,619**			

Table 5-50. Option E-2 – Annual O&M and Capital Costs

O&M Costs	2010	2015	2020	2025	2030
RW Cost (purchase Joint Project)	$0	$0	$772,240	$819,280	$842,800
RW Cost (purchase SBWRF)	$1,426,880	$1,611,400	$1,859,200	$2,015,300	$1,536,640
Metro Discharge Cost	$5,684,927	$5,962,994	$0	$0	$0
PLWWTP Upgrade Cost	$0	$0	$0	$0	$0
Joint Project Cost (22%) [1]	$0	$0	$906,583	$1,530,083	$2,150,000
Capital Costs	**$2,010**	**$2,015**	**$2,020**	**$2,025**	**$2,030**
Total Joint Project Cost [1]	$0	$0	$119,066,667	$34,933,333	$37,466,667
Otay Joint Project Cost (22%) [1]	$0	$0	$25,599,333	$7,510,667	$8,055,333
Decommission/Demolition cost [1]	$0	$3,955,800	$0	$0	$0
Additional Metro Cost [2]	$0	$20,970,000	$0	$0	$0
PLWWTP Upgrade Cost	$0	$0	$0	$0	$0
Joint Project Pump Station/Pipeline [3]	$0	$0	$4,440,000	$0	$0

[1] Based on City of Chula Vista's Acquisition of Additional Wastewater Capacity Project Final Report April 2012

[2] Per discussion with District staff, $22 Million paid to Metro and $8 Million paid to the County per MGD of capacity.

[3] 10 MGD Pump Station (900 hp), 7000 LF of Pipeline.

Table 5-51. Option E-2 – Present Worth of Wastewater and Recycled Water Costs

Present Worth (Wastewater)	**2015**	**2020**	**2025**	**2030**
Interest Rate	2%	2%	2%	2%
Uniform Amount per Interest Period	$5,962,994	$906,583	$1,530,083	$2,150,000
Factor Table	4.7135	4.7135	4.7135	1.0000
O&M Present Worth	$28,106,570	$4,273,181	$7,212,048	$2,150,000
Capital Costs	$24,925,800	$25,599,333	$7,510,667	$8,055,333
Present Worth Amount	$53,032,370	$29,872,514	$14,722,715	$10,205,333
Wastewater Total	**$107,832,933**			

Present Worth (Recycled)	**2015**	**2020**	**2025**	**2030**
Interest Rate	2%	2%	2%	2%
Uniform Amount per Interest Period	$1,611,400	$2,631,440	$2,834,580	$2,379,440
Factor Table	4.7135	4.7135	4.7135	1.0000
O&M Present Worth	$7,595,334	$12,403,292	$13,360,793	$2,379,440
Capital Costs	$0	$4,440,000	$0	$0
Present Worth Amount	$7,595,334	$16,843,292	$13,360,793	$2,379,440
Recycled Total	**$40,178,859**			
Total	**$148,011,792**			

5.4.6 Summary of Present Worth Costs

A summary of present worth costs for the 18 wastewater management sub-options associated with the five primary options is shown in Table 5-52 below. The summary costs are presented in $ million. The table is broken out into options that indicate District purchase of recycled water from SBWRP and those assuming District purchase of recycled water from Chula Vista when water becomes available. For Option A, present worth is significantly less for on-site solids handling at RWCWRF due to presumed avoidance of significant discharge to Metro and future Point Loma upgrade costs or its Metro alternative. For Options A-C associated with capacity at RWCWRF, the lowest present worth costs are for retaining the RWCWRF at 1.3 MGD capacity and not expanding to 2.6 nor 3.9 MGD. The Options D and E associated with the abandonment of RWCWRF are significantly more costly than RWCWRF retention due to costs associated with increased discharge to Metro, with risks of incurring costs for Point Loma upgrade (D), and cost of a new joint WWTP in partnership with the County.

Table 5-52. Present Worth Cost Summary for Wastewater Management Options ($M)

Option		SBWRP Only No Chula Vista Purchases		Chula Vista WRF Only No SBWRP Purchases	
		No Point Loma WWTP Upgrade	Point Loma WWTP Upgrade	No Point Loma WWTP Upgrade	Point Loma WWTP Upgrade
A	Onsite sludge	$37.1	--	$34.7	--
	No onsite sludge	$79.3	$87.0	$77.0	$84.6
B	Onsite sludge	$82.7	--	--	--
	No onsite sludge	$86.4	$92.8	--	--
C	Onsite sludge	$134.3	--	--	--
	No onsite sludge	$139.8	$146.3	--	--
D		$153.7	$163.0	$156.8	$166.1
E (onsite sludge)		$148.0	$154.0		

Appendix E

Cost Evaluations Excel Workbook

THIS PAGE INTENTIONALLY LEFT BLANK

Table A: Basic Assumptions
Otay Water District
Wastewater Management Plan

Assumptions

SBWRF Purchase Rate (per AF) [1]	$350
2012 Metro/County Rate (per MGD) [6]	$3,089,634
Additional Metro Capacity Cost (per MGD) [3]	$30,000,000
PLWWTP Upgrade Capital Cost [4]	$1,161,174,957
Otay WD Capital Cost for PLWWTP Upgrade (0.5%) [4]	$5,956,828
PLWWTP Upgrade O&M Cost [4]	$37,497,060
Otay WD Annual O&M Cost for PLWWTP Upgrade (per MGD) [4]	$156,238
MWD/SDCWA Rebate (per AF) [5]	$385

[1] Based on Recycled Purchase Agreement between City of San Diego and Otay WD.
[2] Based on Metro Discharge Agreement between City of San Diego and Otay WD.
[3] Per discussion with Rita Bell. $22 Million paid to Metro, $8 Million paid to the County.
[4] Per Attachement 2: Point Loma Costs at Different Capacities from The City of San Diego's Recycled Water Study
[5] $185/AF is received from MET (expires 2024), $200/AF comes from CWA (expires 2032).
[6] Lump sum of Metro cost and County cost based on recent invoices provided.

Option	Present Worth					
	w/o Chula Vista Purchase			w/ Chula Vista Purchase		
	w/ On-Site Solids	w/o On-Site Solids	w/o On-Site Solids	w/ On-Site Solids	w/o On-Site Solids	w/o On-Site Solids
	w/o PLWWTP upgrade	w/ PLWWTP upgrade	w/o PLWWTP upgrade	w/o PLWWTP upgrade	w/ PLWWTP upgrade	w/o PLWWTP upgrade
A	$37,088,230	$87,000,820	$79,347,280	$34,720,545	$84,633,135	$76,979,595

	w/ On-Site Solids	w/o On-Site Solids	w/o On-Site Solids
	w/o PLWWTP upgrade	w/ PLWWTP upgrade	w/o PLWWTP upgrade
B	$82,748,781	$92,825,006	$86,444,615
C	$134,310,963	$146,347,260	$139,755,087

	w/o Chula Vista Purchase		w/ Chula Vista Purchase	
	w/o PLWWTP upgrade	w/ PLWWTP upgrade	w/o PLWWTP upgrade	w/ PLWWTP upgrade
D	$153,709,980	$162,992,611	$156,813,443	$166,096,074

	w/o PLWWTP upgrade	w/ PLWWTP upgrade
E	$148,011,792	$153,968,619

Table A-1
Otay Water District
Wastewater Management Plan
Options Present Worth Analysis

Option A - Maintain Existing Wastewater Treatment Capacity at the Ralph W. Chapman Water Recycling Facility

w/o Chula Vista Purchase, w/ On-Site Solids Handling, w/o PLWWTP Upgrade

	Flows (MGD)					Flows (AFY)				
Wastewater	**2010**	**2015**	**2020**	**2025**	**2030**	**2010**	**2015**	**2020**	**2025**	**2030**
Total Metro Discharge [1]	0.84	-	-	-	-	941	-	-	-	-
Total District WW Flow	1.84	1.93	1.97	2.09	2.15	2,061	2,162	2,206	2,341	2,408
Recycled	**2010**	**2015**	**2020**	**2025**	**2030**	**2010**	**2015**	**2020**	**2025**	**2030**
RWCWRF Production [2]	1.000	1.000	1.000	1.000	1.000	1,120	1,120	1,120	1,120	1,120
Recycled Demand [3]	3.64	3.93	4.46	5.18	6.07	4,077	4,402	4,995	5,802	6,798
SBWRF Purchase	2.64	2.93	3.46	4.18	5.07	2,957	3,282	3,875	4,682	5,678
SBWRF Annual Contract Amount [4]	2.98	4.11	4.74	5.14	-	3,338	4,604	5,312	5,758	-

[1] Otay WD has a 1.231 MGD Metro capacity.
[2] Producing 77% of Total RWCWRF Capacity.
[3] Based on Recycled Water Memo 06-08-12.
[4] Based on Recycled Purchase Agreement between City of San Diego and Otay WD.

w/o Chula Vista Purchase, w/ On-Site Solids Handling, w/o PLWWTP Upgrade

O&M Costs	**2010**	**2015**	**2020**	**2025**	**2030**
RW Cost (purchase SBWRF)	$ 1,168,500	$ 1,311,405	$ 1,659,200	$ 2,015,300	$ 1,957,440
MWD/SDCWA Rebate	$ (431,200)	$ (431,200)	$ (431,200)	$ (224,000)	$ (224,000)
Metro Discharge Cost	$ 2,595,293	$ -	$ -	$ -	$ -
PLWWTP Upgrade Cost	$ -	$ -	$ -	$ -	$ -
On-Site Solids Handling Power Cost [1]	$ -	$ 56,168	$ 56,168	$ 56,168	$ 56,168
On-Site Solids Handling Chemical Cost [1]	$ -	$ 42,359	$ 42,359	$ 42,359	$ 42,359
Power Cost [2]	$ 90,100	$ 90,100	$ 90,100	$ 90,100	$ 90,100
Chemical Cost [1]	$ -	$ -	$ -	$ -	$ -
Collection/Treatment/Operation [2]	$ 354,682	$ 354,682	$ 354,682	$ 354,682	$ 354,682
RWCWRF Operating Cost [2]	$ 199,211	$ 199,211	$ 199,211	$ 199,211	$ 199,211

Capital Costs	**2010**	**2015**	**2020**	**2025**	**2030**
On-Site Solids Handling Cost [1]	$ -	$ 3,345,620	$ -	$ -	$ -
PLWWTP Upgrade Cost	$ -	$ -	$ -	$ -	$ -

[1] Based on Final RWCWRF Capital Cost Assessment 10-29-12.
[2] Based on Recycled and Sewer Cost Spreadsheet.

w/o Chula Vista Purchase, w/ On-Site Solids Handling, w/o PLWWTP Upgrade

Present Worth (Wastewater)	**2010**	**2015**	**2020**	**2025**	**2030**	
Interest Rate		2%	2%	2%	2%	
Uniform Amount per Interest Period		$ 742,520	$ 742,520	$ 742,520	$ 742,520	
Factor Table		4.7135	4.7135	4.7135	1.0000	
O&M Present Worth		$ 3,499,869	$ 3,499,869	$ 3,499,869	$ 742,520	
Capital Costs		$ 3,345,620	$ -	$ -	$ -	**Wastewater Total**
Present Worth Amount		$ 6,845,489	$ 3,499,869	$ 3,499,869	$ 742,520	[illegible]

Present Worth (Recycled)	**2010**	**2015**	**2020**	**2025**	**2030**		
Interest Rate		2%	2%	2%	2%		
Uniform Amount per Interest Period		$ 1,180,200	$ 1,428,000	$ 1,791,300	$ 1,763,440		
Factor Table		4.7135	4.7135	4.7135	1.0000		
O&M Present Worth		$ 5,562,873	$ 6,730,878	$ 8,443,293	$ 1,763,440		
Capital Costs		$ -	$ -	$ -	$ -	**Recycled Total**	**Total**
Present Worth Amount		$ 5,562,873	$ 6,730,878	$ 8,443,293	$ 1,763,440	[illegible]	$ 37,088,230

w/o Chula Vista Purchase, w/o On-Site Solids Handling, w/ PLWWTP Upgrade

Wastewater	Flows (MGD) 2010	2015	2020	2025	2030	Flows (AFY) 2010	2015	2020	2025	2030
Total Metro Discharge [1]	0.84	0.93	0.97	1.09	1.15	941	1,042	1,086	1,221	1,288
Total District WW Flow	1.84	1.93	1.97	2.09	2.15	2,061	2,162	2,206	2,341	2,408
Recycled	**2010**	**2015**	**2020**	**2025**	**2030**	**2010**	**2015**	**2020**	**2025**	**2030**
RWCWRF Production [2]	1.000	1.000	1.000	1.000	1.000	1,120	1,120	1,120	1,120	1,120
Recycled Demand [3]	3.64	3.93	4.46	5.18	6.07	4,077	4,402	4,995	5,802	6,798
SBWRF Purchase	2.64	2.93	3.46	4.18	5.07	2,957	3,282	3,875	4,682	5,678
SBWRF Annual Contract Amount [4]	2.98	4.11	4.74	5.14	-	3,338	4,604	5,312	5,758	-

[1] Otay WD has a 1.231 MGD Metro capacity.
[2] Producing 77% of Total RWCWRF Capacity
[3] Based on Recycled Water Memo 06-08-12
[4] Based on Recycled Purchase Agreement between City of San Diego and Otay WD.

w/o Chula Vista Purchase, w/o On-Site Solids Handling, w/ PLWWTP Upgrade

O&M Costs	2010	2015	2020	2025	2030
RW Cost (purchase SBWRF)	$ 1,169,300	$ 1,611,400	$ 1,889,920	$ 2,015,300	$ 1,987,440
MWD/SDCWA Rebate	$ (431,200)	$ (431,200)	$ (431,200)	$ (224,000)	$ (224,000)
Metro Discharge Cost	$ 2,595,293	$ 2,873,360	$ 2,996,945	$ 3,367,701	$ 3,553,079
PLWWTP Upgrade Cost	$ -	$ -	$ 151,551	$ 170,299	$ 179,673
On-Site Solids Handling Power Cost [1]	$ -	$ -	$ -	$ -	$ -
On-Site Solids Handling Chemical Cost [1]	$ -	$ -	$ -	$ -	$ -
Power Cost [2]	$ 90,100	$ 90,100	$ 90,100	$ 90,100	$ 90,100
Chemical Cost [1]	$ -	$ -	$ -	$ -	$ -
Collection/Treatment/Operation [2]	$ 354,682	$ 354,682	$ 354,682	$ 354,682	$ 354,682
RWCWRF Operating Cost [2]	$ 199,211	$ 199,211	$ 199,211	$ 199,211	$ 199,211

Capital Costs	2010	2015	2020	2025	2030
On-Site Solids Handling Cost [1]	$ -	$ -	$ -	$ -	$ -
PLWWTP Upgrade Cost	$ -	$ -	$ 5,956,828	$ -	$ -

[1] Based on Final RWCWRF Capital Cost Assessment 10-29-12
[2] Based on Recycled and Sewer Cost Spreadsheet

Present Worth (Wastewater)	2010	2015	2020	2025	2030	
Interest Rate		2%	2%	2%	2%	
Uniform Amount per Interest Period		$ 3,517,353	$ 3,792,489	$ 4,181,993	$ 4,376,746	
Factor Table		4.7135	4.7135	4.7135	1.0000	
O&M Present Worth		$ 16,579,042	$ 17,875,896	$ 19,711,826	$ 4,376,746	
Capital Costs		$ -	$ 5,956,828	$ -	$ -	Wastewater Total
Present Worth Amount		$ 16,579,042	$ 23,832,723	$ 19,711,826	$ 4,376,746	$ [illegible]

Present Worth (Recycled)	2010	2015	2020	2025	2030		
Interest Rate		2%	2%	2%	2%		
Uniform Amount per Interest Period		$ 1,180,200	$ 1,428,000	$ 1,791,300	$ 1,763,440		
Factor Table		4.7135	4.7135	4.7135	1.0000		
O&M Present Worth		$ 5,562,873	$ 6,730,878	$ 8,443,293	$ 1,763,440		
Capital Costs		$ -	$ -	$ -	$ -	Recycled Total	Total
Present Worth Amount		$ 5,562,873	$ 6,730,878	$ 8,443,293	$ 1,763,440	$ [illegible]	$ 87,000,820

w/o Chula Vista Purchase, w/o On-Site Solids Handling, w/o PLWWTP Upgrade

	Flows (MGD)					Flows (AFY)				
Wastewater	**2010**	**2015**	**2020**	**2025**	**2030**	**2010**	**2015**	**2020**	**2025**	**2030**
Total Metro Discharge [1]	0.84	0.93	0.97	1.09	1.15	941	1,042	1,086	1,221	1,288
Total District WW Flow	1.84	1.93	1.97	2.09	2.15	2,061	2,162	2,206	2,341	2,408
Recycled	**2010**	**2015**	**2020**	**2025**	**2030**	**2010**	**2015**	**2020**	**2025**	**2030**
RWCWRF Production [2]	1.000	1.000	1.000	1.000	1.000	1,120	1,120	1,120	1,120	1,120
Recycled Demand [3]	3.64	3.93	4.46	5.18	6.07	4,077	4,402	4,995	5,802	6,798
SBWRF Purchase	2.64	2.93	3.46	4.18	5.07	2,957	3,282	3,875	4,682	5,678
SBWRF Annual Contract Amount [4]	2.98	4.11	4.74	5.14	-	3,338	4,604	5,312	5,758	-

[1] Otay WD has a 1.231 MGD Metro capacity

[2] Producing 77% of Total RWCWRF Capacity

[3] Based on Recycled Water Memo 06-08-12

[4] Based on Recycled Purchase Agreement between City of San Diego and Otay WD.

w/o Chula Vista Purchase, w/o On-Site Solids Handling, w/o PLWWTP Upgrade

O&M Costs	**2010**	**2015**	**2020**	**2025**	**2030**
RW Cost (purchase SBWRF)	$ 1,163,560	$ 1,611,400	$ 1,858,200	$ 2,016,300	$ 1,987,440
MWD/SDCWA Rebate	$ (431,200)	$ (431,200)	$ (431,200)	$ (224,000)	$ (224,000)
Metro Discharge Cost	$ 2,595,293	$ 2,873,360	$ 2,996,945	$ 3,367,701	$ 3,553,079
PLWWTP Upgrade Cost	$ -	$ -	$ -	$ -	$ -
On-Site Solids Handling Power Cost [1]	$ -	$ -	$ -	$ -	$ -
On-Site Solids Handling Chemical Cost [1]	$ -	$ -	$ -	$ -	$ -
Power Cost [2]	$ 90,100	$ 90,100	$ 90,100	$ 90,100	$ 90,100
Chemical Cost [1]	$ -	$ -	$ -	$ -	$ -
Collection/Treatment/Operation [2]	$ 354,682	$ 354,682	$ 354,682	$ 354,682	$ 354,682
RWCWRF Operating Cost [2]	$ 199,211	$ 199,211	$ 199,211	$ 199,211	$ 199,211

Capital Costs	**2010**	**2015**	**2020**	**2025**	**2030**
On-Site Solids Handling Cost [1]	$ -	$ -	$ -	$ -	$ -
PLWWTP Upgrade Cost	$ -	$ -	$ -	$ -	$ -

[1] Based on Final RWCWRF Capital Cost Assessment 10-29-12

[2] Based on Recycled and Sewer Cost Spreadsheet.

Present Worth (Wastewater)	**2010**	**2015**	**2020**	**2025**	**2030**	
Interest Rate		2%	2%	2%	2%	
Uniform Amount per Interest Period		$ 3,517,353	$ 3,640,938	$ 4,011,694	$ 4,197,072	
Factor Table		4.7135	4.7135	4.7135	1.0000	
O&M Present Worth		$ 16,579,042	$ 17,161,562	$ 18,909,121	$ 4,197,072	
Capital Costs		$ -	$ -	$ -	$ -	**Wastewater Total**
Present Worth Amount		$ 16,579,042	$ 17,161,562	$ 18,909,121	$ 4,197,072	$ [illegible]

Present Worth (Recycled)	**2010**	**2015**	**2020**	**2025**	**2030**		
Interest Rate		2%	2%	2%	2%		
Uniform Amount per Interest Period		$ 1,180,200	$ 1,428,000	$ 1,791,300	$ 1,763,440		
Factor Table		4.7135	4.7135	4.7135	1.0000		
O&M Present Worth		$ 5,562,873	$ 6,730,878	$ 8,443,293	$ 1,763,440		
Capital Costs		$ -	$ -	$ -	$ -	**Recycled Total**	**Total**
Present Worth Amount		$ 5,562,873	$ 6,730,878	$ 8,443,293	$ 1,763,440	[illegible]	$ 79,947,280

	w/ Chula Vista Purchase, w/ On-Site Solids Handling, w/o PLWWTP Upgrade									
	Flows (MGD)					Flows (AFY)				
Recycled	**2010**	**2015**	**2020**	**2025**	**2030**	**2010**	**2015**	**2020**	**2025**	**2030**
Chula Vista Available [1]	-	-	2.00	4.00	6.00	-	-	2,240	4,480	6,720
Chula Vista Purchase	-	-	2.00	4.00	5.07	-	-	2,240	4,480	5,678
SBWRF Purchase	2.64	2.93	1.46	0.18	-	2,957	3,282	1,635	202	-

[1] Based on City of Chula Vista's Acquisition of Additional Wastewater Capacity Project Final Report April 2012

	w/ Chula Vista Purchase, w/ On-Site Solids Handling, w/o PLWWTP Upgrade				
O&M Costs	**2010**	**2015**	**2020**	**2025**	**2030**
RW Cost (purchase Chula Vista)	$ -	$ -	$ 784,002	$ 1,968,000	$ 1,987,440
RW Cost (purchase SBWRF)	$ 1,034,880	$ 1,148,560	$ 572,320	$ 70,560	$ -
MWD/SDCWA Rebate	$ (431,200)	$ (431,200)	$ (431,200)	$ (224,000)	$ (224,000)
Metro Discharge Cost	$ 2,595,293	$ -	$ -	$ -	$ -
PLWWTP Upgrade Cost	$ -	$ -	$ -	$ -	$ -
On-Site Solids Handling Power Cost [1]	$ -	$ 56,168	$ 56,168	$ 56,168	$ 56,168
On-Site Solids Handling Chemical Cost [1]	$ -	$ 42,359	$ 42,359	$ 42,359	$ 42,359
Power Cost [2]	$ 90,100	$ 90,100	$ 90,100	$ 90,100	$ 90,100
Chemical Cost [1]	$ -	$ -	$ -	$ -	$ -
Collection/Treatment/Operation [2]	$ 354,682	$ 354,682	$ 354,682	$ 354,682	$ 354,682
RWCWRF operating cost	$ 199,211	$ 199,211	$ 199,211	$ 199,211	$ 199,211
Capital Costs	**2010**	**2015**	**2020**	**2025**	**2030**
On-Site Solids Handling Cost [1]	$ -	$ 3,345,620	$ -	$ -	$ -
PLWWTP Upgrade Cost	$ -	$ -	$ -	$ -	$ -
Chula Vista Pump Station/Pipeline [3]	$ -	$ -	$ 3,960,000	$ -	$ -

[1] Based on Final RWCWRF Capital Cost Assessment 10-29-12

[2] Based on Recycled and Sewer Cost Spreadsheet.

[3] 6 MGD Pump Station (600 hp), 8000 LF of Pipeline.

Present Worth (Wastewater)	**2010**	**2015**	**2020**	**2025**	**2030**	
Interest Rate		2%	2%	2%	2%	
Uniform Amount per Interest Period		$ 742,520	$ 742,520	$ 742,520	$ 742,520	
Factor Table		4.7135	4.7135	4.7135	1.0000	
O&M Present Worth		$ 3,499,869	$ 3,499,869	$ 3,499,869	$ 742,520	
Capital Costs		$ 3,345,620	$ -	$ -	$ -	**Wastewater Total**
Present Worth Amount		$ 6,845,489	$ 3,499,869	$ 3,499,869	$ 742,520	[illegible]

Present Worth (Recycled)	**2010**	**2015**	**2020**	**2025**	**2030**		
Interest Rate		2%	2%	2%	2%		
Uniform Amount per Interest Period		$ 717,360	$ 925,120	$ 1,414,560	$ 1,763,440		
Factor Table		4.7135	4.7135	4.7135	1.0000		
O&M Present Worth		$ 3,381,276	$ 4,360,553	$ 6,667,529	$ 1,763,440		
Capital Costs		$ -	$ 3,960,000	$ -	$ -	**Recycled Total**	**Total**
Present Worth Amount		$ 3,381,276	$ 8,320,553	$ 6,667,529	$ 1,763,440	[illegible]	$ 34,720,545

	w/ Chula Vista Purchase, w/o On-Site Solids Handling, w/ PLWWTP Upgrade									
	Flows (MGD)					Flows (AFY)				
Recycled	**2010**	**2015**	**2020**	**2025**	**2030**	**2010**	**2015**	**2020**	**2025**	**2030**
Chula Vista Available [1]	-	-	2.00	4.00	6.00	-	-	2,240	4,480	6,720
Chula Vista Purchase	-	-	2.00	4.00	5.07	-	-	2,240	4,480	5,678
SBWRF Purchase	2.64	2.93	1.46	0.18	-	2,957	3,282	1,635	202	-

[1] Based on City of Chula Vista's Acquisition of Additional Wastewater Capacity Project Final Report April 2012

	w/ Chula Vista Purchase, w/o On-Site Solids Handling, w/ PLWWTP Upgrade				
O&M Costs	**2010**	**2015**	**2020**	**2025**	**2030**
RW Cost (purchase Chula Vista)	$ -	$ -	$ 784,000	$ 1,568,000	$ 1,987,440
RW Cost (purchase SBWRF)	$ 1,934,880	$ 1,148,560	$ 572,320	$ 70,560	$ -
MWD/SDCWA Rebate	$ (431,200)	$ (431,200)	$ (431,200)	$ (224,000)	$ (224,000)
Metro Discharge Cost	$ 2,595,293	$ 2,873,360	$ 2,996,945	$ 3,367,701	$ 3,553,079
PLWWTP Upgrade Cost	$ -	$ -	$ 151,551	$ 170,299	$ 179,673
On-Site Solids Handling Power Cost [1]	$ -	$ -	$ -	$ -	$ -
On-Site Solids Handling Chemical Cost [1]	$ -	$ -	$ -	$ -	$ -
Power Cost [2]	$ 90,100	$ 90,100	$ 90,100	$ 90,100	$ 90,100
Chemical Cost [1]	$ -	$ -	$ -	$ -	$ -
Collection/Treatment/Operation [2]	$ 354,682	$ 354,682	$ 354,682	$ 354,682	$ 354,682
RWCWRF operating cost	$ 199,211	$ 199,211	$ 199,211	$ 199,211	$ 199,211
Capital Costs	**2010**	**2015**	**2020**	**2025**	**2030**
On-Site Solids Handling Cost [1]	$ -	$ -	$ -	$ -	$ -
PLWWTP Upgrade Cost	$ -	$ -	$ 5,956,828	$ -	$ -
Chula Vista Pump Station/Pipeline [3]	$ -	$ -	$ 3,960,000	$ -	$ -

[1] Based on Final RWCWRF Capital Cost Assessment 10-29-12.
[2] Based on Recycled and Sewer Cost Spreadsheet.
[3] 6 MGD Pump Station (600 hp), 8000 LF of Pipeline.

Present Worth (Wastewater)	**2010**	**2015**	**2020**	**2025**	**2030**	
Interest Rate		2%	2%	2%	2%	
Uniform Amount per Interest Period		$ 3,517,353	$ 3,792,489	$ 4,181,993	$ 4,376,746	
Factor Table		4.7135	4.7135	4.7135	1.0000	
O&M Present Worth		$ 16,579,042	$ 17,875,896	$ 19,711,826	$ 4,376,746	
Capital Costs		$ -	$ 5,956,828	$ -	$ -	
Present Worth Amount		$ 16,579,042	$ 23,832,723	$ 19,711,826	$ 4,376,746	**Wastewater Total**

Present Worth (Recycled)	**2010**	**2015**	**2020**	**2025**	**2030**		
Interest Rate		2%	2%	2%	2%		
Uniform Amount per Interest Period		$ 717,360	$ 925,120	$ 1,414,560	$ 1,763,440		
Factor Table		4.7135	4.7135	4.7135	1.0000		
O&M Present Worth		$ 3,381,276	$ 4,360,553	$ 6,667,529	$ 1,763,440		
Capital Costs		$ -	$ 3,960,000	$ -	$ -		
Present Worth Amount		$ 3,381,276	$ 8,320,553	$ 6,667,529	$ 1,763,440	**Recycled Total**	**Total**
							$ 84,633,135

	w/ Chula Vista Purchase, w/o On-Site Solids Handling, w/ PLWWTP Upgrade									
	Flows (MGD)					Flows (AFY)				
Recycled	**2010**	**2015**	**2020**	**2025**	**2030**	**2010**	**2015**	**2020**	**2025**	**2030**
Chula Vista Available [1]	-	-	2.00	4.00	6.00	-	-	2,240	4,480	6,720
Chula Vista Purchase	-	-	2.00	4.00	5.07	-	-	2,240	4,480	5,678
SBWRF Purchase	2.64	2.93	1.46	0.18	-	2,957	3,282	1,635	202	-

[1] Based on City of Chula Vista's Acquisition of Additional Wastewater Capacity Project Final Report April 2012

	w/ Chula Vista Purchase, w/o On-Site Solids Handling, w/ PLWWTP Upgrade				
O&M Costs	**2010**	**2015**	**2020**	**2025**	**2030**
RW Cost (purchase Chula Vista)	$ -	$ -	$ 784,000	$ 1,568,000	$ 1,997,440
RW Cost (purchase SBWRF)	$ 1,034,880	$ 1,148,560	$ 572,320	$ 70,560	$ -
MWD/SDCWA Rebate	$ (431,200)	$ (431,200)	$ (431,200)	$ (224,000)	$ (224,000)
Metro Discharge Cost	$ 2,595,293	$ 3,873,360	$ 2,936,945	$ 3,367,701	$ 3,553,979
PLWWTP Upgrade Cost	$ -	$ -	$ -	$ -	$ -
On-Site Solids Handling Power Cost [1]	$ -	$ -	$ -	$ -	$ -
On-Site Solids Handling Chemical Cost [1]	$ -	$ -	$ -	$ -	$ -
Power Cost [2]	$ 90,100	$ 90,100	$ 90,100	$ 90,100	$ 90,100
Chemical Cost [1]	$ -	$ -	$ -	$ -	$ -
Collection/Treatment/Operation [2]	$ 354,682	$ 354,682	$ 354,682	$ 354,682	$ 354,682
RWCWRF operating cost	$ 199,211	$ 199,211	$ 199,211	$ 199,211	$ 199,211
Capital Costs	**2010**	**2015**	**2020**	**2025**	**2030**
On-Site Solids Handling Cost [1]	$ -	$ -	$ -	$ -	$ -
PLWWTP Upgrade Cost	$ -	$ -	$ -	$ -	$ -
Chula Vista Pump Station/Pipeline [3]	$ -	$ -	$ 2,960,000	$ -	$ -

[1] Based on Final RWCWRF Capital Cost Assessment 10-29-12.
[2] Based on Recycled and Sewer Cost Spreadsheet.
[3] 6 MGD Pump Station (600 hp), 8000 LF of Pipeline.

Present Worth (Wastewater)	**2010**	**2015**	**2020**	**2025**	**2030**	
Interest Rate		2%	2%	2%	2%	
Uniform Amount per Interest Period		$ 3,517,353	$ 3,640,938	$ 4,011,694	$ 4,197,072	
Factor Table		4.7135	4.7135	4.7135	1.0000	
O&M Present Worth		$ 16,579,042	$ 17,161,562	$ 18,909,121	$ 4,197,072	
Capital Costs		$ -	$ -	$ -	$ -	**Wastewater Total**
Present Worth Amount		$ 16,579,042	$ 17,161,562	$ 18,909,121	$ 4,197,072	[illegible]

Present Worth (Recycled)	**2010**	**2015**	**2020**	**2025**	**2030**		
Interest Rate		2%	2%	2%	2%		
Uniform Amount per Interest Period		$ 717,360	$ 925,120	$ 1,414,560	$ 1,763,440		
Factor Table		4.7135	4.7135	4.7135	1.0000		
O&M Present Worth		$ 3,381,276	$ 4,360,553	$ 6,667,529	$ 1,763,440		
Capital Costs		$ -	$ 3,960,000	$ -	$ -	**Recycled Total**	**Total**
Present Worth Amount		$ 3,381,276	$ 8,320,553	$ 6,667,529	$ 1,763,440	[illegible]	$ 76,979,595

Table: B-1
Otay Water District
Wastewater Management Plan
Options Present Worth Analysis

Option B - Expand the Ralph W. Chapman Water Recycling Facility to 2.6 MGD

w/ On-Site Solids Handling, w/o PLWWTP Upgrade

	Flows (MGD)					Flows (AFY)				
Wastewater	**2010**	**2015**	**2020**	**2025**	**2030**	**2010**	**2015**	**2020**	**2025**	**2030**
Total Metro Discharge [1]	0.84	-	-	-	-	941	-	-	-	-
Total District WW Flow	1.84	1.93	1.97	2.09	2.15	2,061	2,162	2,206	2,341	2,408
Recycled	**2010**	**2015**	**2020**	**2025**	**2030**	**2010**	**2015**	**2020**	**2025**	**2030**
RWCWRF Production [2]	1.000	2.340	2.340	2.340	2.340	1,120	2,621	2,621	2,621	2,621
Recycled Demand [3]	3.64	3.93	4.46	5.18	6.07	4,077	4,402	4,995	5,802	6,798
SBWRF Purchase	2.64	1.59	2.12	2.84	3.73	2,957	1,781	2,374	3,181	4,178
SBWRF Annual Contract Amount [4]	2.98	4.11	4.74	5.14	-	3,338	4,604	5,312	5,758	-

[1] Otay WD has a 1.231 MGD Metro capacity.
[2] Producing at 77% of Total RWCWRF Capacity in 2010. Producing at 90% of Total RWCWRF Capacity beginning in 2015.
[3] Based on Recycled Water Memo 06-08-12.
[4] Based on Recycled Purchase Agreement between City of San Diego and Otay WD.

w/ On-Site Solids Handling, w/o PLWWTP Upgrade

O&M Costs	**2010**	**2015**	**2020**	**2025**	**2030**
RW Cost (purchase SBWRF)	$ 1,148,300	$ 1,611,400	$ 1,959,200	$ 2,815,300	$ 1,482,197
MWD/SDCWA Rebate	$ (431,200)	$ (1,009,008)	$ (1,009,008)	$ (524,160)	$ (524,160)
Metro Discharge Cost	$ 2,595,293	$ -	$ -	$ -	$ -
PLWWTP Upgrade Cost	$ -	$ -	$ -	$ -	$ -
On-Site Solids Handling Power Cost [1]	$ -	$ 112,336	$ 112,336	$ 112,336	$ 112,336
On-Site Solids Handling Chemical Cost [1]	$ -	$ 84,718	$ 84,718	$ 84,718	$ 84,718
Power Cost [2]	$ 90,100	$ 559,263	$ 559,263	$ 559,263	$ 559,263
Chemical Cost [1]	$ -	$ 30,947	$ 30,947	$ 30,947	$ 30,947
Collection/Treatment/Operation [2]	$ 354,682	$ 1,504,221	$ 1,504,221	$ 1,504,221	$ 1,504,221
RWCWRF Operating Cost [2]	$ 199,211	$ 844,860	$ 844,860	$ 844,860	$ 844,860
Capital Costs					
On-Site Solids Handling Cost [1]	$ -	$ 5,463,197	$ -	$ -	$ -
Enhancement/Upgrade Cost [1]	$ -	$ 14,866,088	$ -	$ -	$ -
PLWWTP Upgrade Cost	$ -	$ -	$ -	$ -	$ -

[1] Based on Final RWCWRF Capital Cost Assessment 10-29-12.
[2] Based on Recycled and Sewer Cost Spreadsheet.

Present Worth (Wastewater)	**2010**	**2015**	**2020**	**2025**	**2030**	
Interest Rate		2%	2%	2%	2%	
Uniform Amount per Interest Period		$ 3,136,346	$ 3,136,346	$ 3,136,346	$ 3,136,346	
Factor Table		4.7135	4.7135	4.7135	1.0000	
O&M Present Worth		$ 14,783,166	$ 14,783,166	$ 14,783,166	$ 3,136,346	
Capital Costs		$ 20,449,695	$ -	$ -	$ -	**Wastewater Total**
Present Worth Amount		$ 35,232,861	$ 14,783,166	$ 14,783,166	$ 3,136,346	[illegible]

Present Worth (Recycled)	**2010**	**2015**	**2020**	**2025**	**2030**		
Interest Rate		2%	2%	2%	2%		
Uniform Amount per Interest Period		$ 602,392	$ 850,192	$ 1,491,140	$ 938,000		
Factor Table		4.7135	4.7135	4.7135	1.0000		
O&M Present Worth		$ 2,839,375	$ 4,007,380	$ 7,028,488	$ 938,000		
Capital Costs		$ -	$ -	$ -	$ -	**Recycled Total**	**Total**
Present Worth Amount		$ 2,839,375	$ 4,007,380	$ 7,028,488	$ 938,000	[illegible]	$ 82,748,781

w/o On-Site Solids Handling, w/ PLWWTP Upgrade

Wastewater	Flows (MGD) 2010	2015	2020	2025	2030	Flows (AFY) 2010	2015	2020	2025	2030
Total Metro Discharge [1]	0.84	0.26	0.26	0.26	0.26	941	291	291	291	291
Total District WW Flow	1.84	1.93	1.97	2.09	2.15	2,061	2,162	2,206	2,341	2,408
Recycled	**2010**	**2015**	**2020**	**2025**	**2030**	**2010**	**2015**	**2020**	**2025**	**2030**
RWCWRF Production [2]	1.000	2.340	2.340	2.340	2.340	1,120	2,621	2,621	2,621	2,621
Recycled Demand [3]	3.64	3.93	4.46	5.18	6.07	4,077	4,402	4,995	5,802	6,798
SBWRF Purchase	2.64	1.59	2.12	2.84	3.73	2,957	1,781	2,374	3,181	4,178
SBWRF Annual Contract Amount [4]	2.98	4.11	4.74	5.14	-	3,338	4,604	5,312	5,758	-

[1] Otay WD has a 1.231 MGD Metro capacity.
[2] Producing at 77% of Total RWCWRF Capacity in 2010. Producing at 90% of Total RWCWRF Capacity beginning in 2015.
[3] Based on Recycled Water Memo 06-08-12.
[4] Based on Recycled Purchase Agreement between City of San Diego and Otay WD.

w/o On-Site Solids Handling, w/ PLWWTP Upgrade

O&M Costs	2010	2015	2020	2025	2030
RW Cost (purchase SBWRF)	$ 1,188,300	$ 1,611,400	$ 1,889,200	$ 2,015,300	$ 1,462,160
MWD/SDCWA Rebate	$ (431,200)	$ (1,009,008)	$ (1,009,008)	$ (524,160)	$ (524,160)
Metro Discharge Cost	$ 2,695,295	$ 803,305	$ 803,305	$ 803,305	$ 803,305
PLWWTP Upgrade Cost	$ -	$ -	$ 40,622	$ 40,622	$ 40,622
On-Site Solids Handling Power Cost [1]	$ -	$ -	$ -	$ -	$ -
On-Site Solids Handling Chemical Cost [1]	$ -	$ -	$ -	$ -	$ -
Power Cost [2]	$ 90,100	$ 559,263	$ 559,263	$ 559,263	$ 559,263
Chemical Cost [1]	$ -	$ 30,947	$ 30,947	$ 30,947	$ 30,947
Collection/Treatment/Operation [2]	$ 354,682	$ 1,504,221	$ 1,504,221	$ 1,504,221	$ 1,504,221
RWCWRF Operating Cost [2]	$ 199,211	$ 844,060	$ 844,060	$ 844,060	$ 844,060
Capital Costs					
On-Site Solids Handling Cost [1]	$ -	$ -	$ -	$ -	$ -
Enhancement/Upgrade Cost [1]	$ -	$ 14,966,588	$ -	$ -	$ -
PLWWTP Upgrade Cost	$ -	$ -	$ 5,956,828	$ -	$ -

[1] Based on Final RWCWRF Capital Cost Assessment 10-29-12.
[2] Based on Recycled and Sewer Cost Spreadsheet.

Present Worth (Wastewater)	2010	2015	2020	2025	2030	
Interest Rate		2%	2%	2%	2%	
Uniform Amount per Interest Period		$ 3,742,597	$ 3,783,218	$ 3,783,218	$ 3,783,218	
Factor Table		4.7135	4.7135	4.7135	1.0000	
O&M Present Worth		$ 17,640,729	$ 17,832,200	$ 17,832,200	$ 3,783,218	
Capital Costs		$ 14,966,588	$ 5,956,828	$ -	$ -	Wastewater Total
Present Worth Amount		$ 32,607,317	$ 23,789,028	$ 17,832,200	$ 3,783,218	[illegible]

Present Worth (Recycled)	2010	2015	2020	2025	2030		
Interest Rate		2%	2%	2%	2%		
Uniform Amount per Interest Period		$ 602,392	$ 850,192	$ 1,491,140	$ 938,000		
Factor Table		4.7135	4.7135	4.7135	1.0000		
O&M Present Worth		$ 2,839,375	$ 4,007,380	$ 7,028,488	$ 938,000		
Capital Costs		$ -	$ -	$ -	$ -	Recycled Total	Total
Present Worth Amount		$ 2,839,375	$ 4,007,380	$ 7,028,488	$ 938,000	[illegible]	$ 92,825,006

	w/o On-Site Solids Handling, w/ PLWWTP Upgrade									
	Flows (MGD)					Flows (AFY)				
Wastewater	**2010**	**2015**	**2020**	**2025**	**2030**	**2010**	**2015**	**2020**	**2025**	**2030**
Total Metro Discharge [1]	0.84	0.26	0.26	0.26	0.26	941	291	291	291	291
Total District WW Flow	1.84	1.93	1.97	2.09	2.15	2,061	2,162	2,206	2,341	2,408
Recycled	**2010**	**2015**	**2020**	**2025**	**2030**	**2010**	**2015**	**2020**	**2025**	**2030**
RWCWRF Production [2]	1.000	2.340	2.340	2.340	2.340	1,120	2,621	2,621	2,621	2,621
Recycled Demand [3]	3.64	3.93	4.46	5.18	6.07	4,077	4,402	4,995	5,802	6,798
SBWRF Purchase	2.64	1.59	2.12	2.84	3.73	2,957	1,781	2,374	3,181	4,178
SBWRF Annual Contract Amount [4]	2.98	4.11	4.74	5.14	-	3,338	4,604	5,312	5,758	-

[1] Otay WD has a 1.231 MGD Metro capacity.
[2] Producing at 77% of Total RWCWRF Capacity in 2010. Producing at 90% of Total RWCWRF Capacity beginning in 2015.
[3] Based on Recycled Water Memo 06-08-12
[4] Based on Recycled Purchase Agreement between City of San Diego and Otay WD.

	w/o On-Site Solids Handling, w/ PLWWTP Upgrade				
O&M Costs	**2010**	**2015**	**2020**	**2025**	**2030**
RW Cost (purchase SBWRF)	$ 1,168,300	$ 1,411,400	$ 1,655,200	$ 2,015,260	$ 1,462,160
MWD/SDCWA Rebate	$ (431,200)	$ (1,009,008)	$ (1,009,008)	$ (524,160)	$ (524,160)
Metro Discharge Cost	$ 2,595,290	$ 803,305	$ 803,305	$ 803,305	$ 803,305
PLWWTP Upgrade Cost	$ -	$ -	$ -	$ -	$ -
On-Site Solids Handling Power Cost [1]	$ -	$ -	$ -	$ -	$ -
On-Site Solids Handling Chemical Cost [1]	$ -	$ -	$ -	$ -	$ -
Power Cost [2]	$ 90,100	$ 559,263	$ 559,263	$ 559,263	$ 559,263
Chemical Cost [1]	$ -	$ 30,947	$ 30,947	$ 30,947	$ 30,947
Collection/Treatment/Operation [2]	$ 354,682	$ 1,504,221	$ 1,504,221	$ 1,504,221	$ 1,504,221
RWCWRF Operating Cost [2]	$ 199,211	$ 844,860	$ 844,860	$ 844,860	$ 844,860
Capital Costs					
On-Site Solids Handling Cost [1]	$ -	$ -	$ -	$ -	$ -
Enhancement/Upgrade Cost [1]	$ -	$ 14,966,588	$ -	$ -	$ -
PLWWTP Upgrade Cost	$ -	$ -	$ -	$ -	$ -

[1] Based on Final RWCWRF Capital Cost Assessment 10-29-12.
[2] Based on Recycled and Sewer Cost Spreadsheet

Present Worth (Wastewater)	**2010**	**2015**	**2020**	**2025**	**2030**	
Interest Rate		2%	2%	2%	2%	
Uniform Amount per Interest Period		$ 3,742,597	$ 3,742,597	$ 3,742,597	$ 3,742,597	
Factor Table		4.7135	4.7135	4.7135	1.0000	
O&M Present Worth		$ 17,640,729	$ 17,640,729	$ 17,640,729	$ 3,742,597	
Capital Costs		$ 14,966,588	$ -	$ -	$ -	
Present Worth Amount		$ 32,607,317	$ 17,640,729	$ 17,640,729	$ 3,742,597	**Wastewater Total**
Present Worth (Recycled)	**2010**	**2015**	**2020**	**2025**	**2030**	
Interest Rate		2%	2%	2%	2%	
Uniform Amount per Interest Period		$ 602,392	$ 850,192	$ 1,491,140	$ 938,000	
Factor Table		4.7135	4.7135	4.7135	1.0000	
O&M Present Worth		$ 2,839,375	$ 4,007,380	$ 7,028,488	$ 938,000	
Capital Costs		$ -	$ -	$ -	$ -	
Present Worth Amount		$ 2,839,375	$ 4,007,380	$ 7,028,488	$ 938,000	**Recycled Total**

Total $ 86,444,615

Table: C-1
Otay Water District
Wastewater Management Plan
Options Present Worth Analysis

Option C - Expand the Ralph W. Chapman Water Recycling Facility to 3.9 MGD

w/ On-Site Solids Handling, w/o PLWWTP Upgrade

	Flows (MGD)					Flows (AFY)				
Wastewater	**2010**	**2015**	**2020**	**2025**	**2030**	**2010**	**2015**	**2020**	**2025**	**2030**
Total Metro Discharge [1]	0.84	-	-	-	-	941	-	-	-	-
Total District WW Flow	1.84	1.93	1.97	2.09	2.15	2,061	2,162	2,206	2,341	2,408
Recycled	**2010**	**2015**	**2020**	**2025**	**2030**	**2010**	**2015**	**2020**	**2025**	**2030**
RWCWRF Production [2]	1.000	3.510	3.510	3.510	3.510	1,120	3,931	3,931	3,931	3,931
Recycled Demand [3]	3.64	3.93	4.46	5.18	6.07	4,077	4,402	4,995	5,802	6,798
SBWRF Purchase	2.64	0.42	0.95	1.67	2.56	2,957	470	1,064	1,870	2,867
SBWRF Annual Contract Amount [4]	2.98	4.11	4.74	5.14	-	3,338	4,604	5,312	5,758	-

[1] Otay WD has a 1.231 MGD Metro capacity.
[2] Producing at 77% of Total RWCWRF Capacity in 2010. Producing at 90% of Total RWCWRF Capacity beginning in 2015.
[3] Based on Recycled Water Memo 06-08-12.
[4] Based on Recycled Purchase Agreement between City of San Diego and Otay WD.

w/ On-Site Solids Handling, w/o PLWWTP Upgrade

O&M Costs	**2010**	**2015**	**2020**	**2025**	**2030**
RW Cost (purchase SBWRF)	$ 1,108,300	$ 1,611,400	$ 1,669,200	$ 2,013,300	$ 1,003,520
MWD/SDCWA Rebate	$ (431,200)	$ (1,513,512)	$ (1,513,512)	$ (786,240)	$ (786,240)
Metro Discharge Cost	$ 2,585,293	$ -	$ -	$ -	$ -
PLWWTP Upgrade Cost	$ -	$ -	$ -	$ -	$ -
On-Site Solids Handling Power Cost [1]	$ -	$ 168,504	$ 168,504	$ 168,504	$ 168,504
On-Site Solids Handling Chemical Cost [1]	$ -	$ 127,077	$ 127,077	$ 127,077	$ 127,077
Power Cost [2]	$ 80,100	$ 1,197,130	$ 1,197,130	$ 1,197,130	$ 1,197,130
Chemical Cost [1]	$ -	$ 77,081	$ 77,081	$ 77,081	$ 77,081
Collection/Treatment/Operation [2]	$ 364,682	$ 2,999,394	$ 2,999,394	$ 2,999,394	$ 2,999,394
RWCWRF Operating Cost [2]	$ 199,211	$ 1,684,628	$ 1,684,628	$ 1,684,628	$ 1,684,628
Capital Costs					
On-Site Solids Handling Cost [1]	$ -	$ 8,924,268	$ -	$ -	$ -
Enhancement/Upgrade Cost [1]	$ -	$ 23,199,403	$ -	$ -	$ -
PLWWTP Upgrade Cost	$ -	$ -	$ -	$ -	$ -

[1] Based on Final RWCWRF Capital Cost Assessment 10-29-12.
[2] Based on Recycled and Sewer Cost Spreadsheet.

Present Worth (Wastewater)	**2010**	**2015**	**2020**	**2025**	**2030**	
Interest Rate		2%	2%	2%	2%	
Uniform Amount per Interest Period		$ 6,253,824	$ 6,253,824	$ 6,253,824	$ 6,253,824	
Factor Table		4.7135	4.7135	4.7135	1.0000	
O&M Present Worth		$ 29,477,400	$ 29,477,400	$ 29,477,400	$ 6,253,824	
Capital Costs		$ 31,523,691	$ -	$ -	$ -	
Present Worth Amount		$ 61,001,091	$ 29,477,400	$ 29,477,400	$ 6,253,824	**Wastewater Total**

Present Worth (Recycled)	**2010**	**2015**	**2020**	**2025**	**2030**		
Interest Rate		2%	2%	2%	2%		
Uniform Amount per Interest Period		$ 97,888	$ 345,688	$ 1,229,060	$ 217,280		
Factor Table		4.7135	4.7135	4.7135	1.0000		
O&M Present Worth		$ 461,395	$ 1,629,400	$ 5,793,174	$ 217,280		
Capital Costs		$ -	$ -	$ -	$ -		
Present Worth Amount		$ 461,395	$ 1,629,400	$ 5,793,174	$ 217,280	**Recycled Total**	**Total** $ 134,310,963

w/o On-Site Solids Handling, w/ PLWWTP Upgrade

	Flows (MGD)					Flows (AFY)				
Wastewater	**2010**	**2015**	**2020**	**2025**	**2030**	**2010**	**2015**	**2020**	**2025**	**2030**
Total Metro Discharge [1]	0.84	0.39	0.39	0.39	0.39	941	437	437	437	437
Total District WW Flow	1.84	1.93	1.97	2.09	2.15	2,061	2,162	2,206	2,341	2,408
Recycled	**2010**	**2015**	**2020**	**2025**	**2030**	**2010**	**2015**	**2020**	**2025**	**2030**
RWCWRF Production [2]	1.000	3.510	3.510	3.510	3.510	1,120	3,931	3,931	3,931	3,931
Recycled Demand [3]	3.64	3.93	4.46	5.18	6.07	4,077	4,402	4,995	5,802	6,798
SBWRF Purchase	2.64	0.42	0.95	1.67	2.56	2,957	470	1,064	1,870	2,867
SBWRF Annual Contract Amount [4]	2.98	4.11	4.74	5.14	-	3,338	4,604	5,312	5,758	-

[1] Otay WD has a 1.231 MGD Metro capacity.
[2] Producing at 77% of Total RWCWRF Capacity in 2010. Producing at 90% of Total RWCWRF Capacity beginning in 2015.
[3] Based on Recycled Water Memo 06-08-12
[4] Based on Recycled Purchase Agreement between City of San Diego and Otay WD.

w/o On-Site Solids Handling, w/ PLWWTP Upgrade

O&M Costs	**2010**	**2015**	**2020**	**2025**	**2030**
RW Cost (purchase SBWRF)	$ 1,168,300	$ 1,611,400	$ 1,888,200	$ 2,515,100	$ 1,022,550
MWD/SDCWA Rebate	$ (431,200)	$ (1,513,512)	$ (1,513,512)	$ (786,240)	$ (786,240)
Metro Discharge Cost	$ 2,595,293	$ 1,204,957	$ 1,204,957	$ 1,204,957	$ 1,204,957
PLWWTP Upgrade Cost	$ -	$ -	$ 60,933	$ 60,933	$ 60,933
On-Site Solids Handling Power Cost [1]	$ -	$ -	$ -	$ -	$ -
On-Site Solids Handling Chemical Cost [1]	$ -	$ -	$ -	$ -	$ -
Power Cost [2]	$ 90,100	$ 1,197,130	$ 1,197,130	$ 1,197,130	$ 1,197,130
Chemical Cost [1]	$ -	$ 77,081	$ 77,081	$ 77,081	$ 77,081
Collection/Treatment/Operation [2]	$ 354,682	$ 2,999,394	$ 2,999,394	$ 2,999,394	$ 2,999,394
RWCWRF Operating Cost [2]	$ 199,211	$ 1,684,638	$ 1,684,638	$ 1,684,638	$ 1,684,638
Capital Costs					
On-Site Solids Handling Cost [1]	$ -		$ -	$ -	$ -
Enhancement/Upgrade Cost [1]	$ -	$ 23,199,403	$ -	$ -	$ -
PLWWTP Upgrade Cost	$ -	$ -	$ 5,956,828	$ -	$ -

[1] Based on Final RWCWRF Capital Cost Assessment 10-29-12
[2] Based on Recycled and Sewer Cost Spreadsheet

Present Worth (Wastewater)	**2010**	**2015**	**2020**	**2025**	**2030**	
Interest Rate		2%	2%	2%	2%	
Uniform Amount per Interest Period		$ 7,163,200	$ 7,224,133	$ 7,224,133	$ 7,224,133	
Factor Table		4.7135	4.7135	4.7135	1.0000	
O&M Present Worth		$ 33,763,745	$ 34,050,951	$ 34,050,951	$ 7,224,133	
Capital Costs		$ 23,199,403	$ 5,956,828	$ -	$ -	
Present Worth Amount		$ 56,963,148	$ 40,007,778	$ 34,050,951	$ 7,224,133	**Wastewater Total**

Present Worth (Recycled)	**2010**	**2015**	**2020**	**2025**	**2030**		
Interest Rate		2%	2%	2%	2%		
Uniform Amount per Interest Period		$ 97,888	$ 345,688	$ 1,229,060	$ 217,280		
Factor Table		4.7135	4.7135	4.7135	1.0000		
O&M Present Worth		$ 461,395	$ 1,629,400	$ 5,793,174	$ 217,280		
Capital Costs		$ -	$ -	$ -	$ -		
Present Worth Amount		$ 461,395	$ 1,629,400	$ 5,793,174	$ 217,280	**Recycled Total**	**Total** $ 146,347,260

w/o On-Site Solids Handling, w/o PLWWTP Upgrade

	Flows (MGD)					Flows (AFY)				
Wastewater	**2010**	**2015**	**2020**	**2025**	**2030**	**2010**	**2015**	**2020**	**2025**	**2030**
Total Metro Discharge [1]	0.84	0.39	0.39	0.39	0.39	941	437	437	437	437
Total District WW Flow	1.84	1.93	1.97	2.09	2.15	2,061	2,162	2,206	2,341	2,408
Recycled	**2010**	**2015**	**2020**	**2025**	**2030**	**2010**	**2015**	**2020**	**2025**	**2030**
RWCWRF Production [2]	1.000	3.510	3.510	3.510	3.510	1,120	3,931	3,931	3,931	3,931
Recycled Demand [3]	3.64	3.93	4.46	5.18	6.07	4,077	4,402	4,995	5,802	6,798
SBWRF Purchase	2.64	0.42	0.95	1.67	2.56	2,957	470	1,064	1,870	2,867
SBWRF Annual Contract Amount [4]	2.98	4.11	4.74	5.14	-	3,338	4,604	5,312	5,758	-

[1] Otay WD has a 1.231 MGD Metro capacity.
[2] Producing at 77% of Total RWCWRF Capacity in 2010. Producing at 90% of Total RWCWRF Capacity beginning in 2015.
[3] Based on Recycled Water Memo 06-08-12
[4] Based on Recycled Purchase Agreement between City of San Diego and Otay WD.

w/o On-Site Solids Handling, w/o PLWWTP Upgrade

O&M Costs	**2010**	**2015**	**2020**	**2025**	**2030**
RW Cost (purchase SBWRF)	$ 1,168,308	$ 1,611,400	$ 1,889,200	$ 2,018,300	$ 1,003,520
MWD/SDCWA Rebate	$ (431,200)	$ (1,513,512)	$ (1,513,512)	$ (786,240)	$ (786,240)
Metro Discharge Cost	$ 2,595,293	$ 1,204,957	$ 1,204,957	$ 1,204,957	$ 1,204,957
PLWWTP Upgrade Cost	$ -	$ -	$ -	$ -	$ -
On-Site Solids Handling Power Cost [1]	$ -	$ -	$ -	$ -	$ -
On-Site Solids Handling Chemical Cost [1]	$ -	$ -	$ -	$ -	$ -
Power Cost [2]	$ 90,100	$ 1,197,130	$ 1,197,130	$ 1,197,130	$ 1,197,130
Chemical Cost [1]	$ -	$ 77,081	$ 77,081	$ 77,081	$ 77,081
Collection/Treatment/Operation [2]	$ 354,682	$ 2,999,394	$ 2,999,394	$ 2,999,394	$ 2,999,394
RWCWRF Operating Cost [2]	$ 199,211	$ 1,684,636	$ 1,684,636	$ 1,684,636	$ 1,684,636
Capital Costs					
On-Site Solids Handling Cost [1]	$ -		$ -	$ -	$ -
Enhancement/Upgrade Cost [1]	$ -	$ 23,199,403	$ -	$ -	$ -
PLWWTP Upgrade Cost	$ -	$ -	$ -	$ -	$ -

[1] Based on Final RWCWRF Capital Cost Assessment 10-29-12
[2] Based on Recycled and Sewer Cost Spreadsheet.

Present Worth (Wastewater)	**2010**	**2015**	**2020**	**2025**	**2030**	
Interest Rate		2%	2%	2%	2%	
Uniform Amount per Interest Period		$ 7,163,200	$ 7,163,200	$ 7,163,200	$ 7,163,200	
Factor Table		4.7135	4.7135	4.7135	1.0000	
O&M Present Worth		$ 33,763,745	$ 33,763,745	$ 33,763,745	$ 7,163,200	
Capital Costs		$ 23,199,403	$ -	$ -	$ -	
Present Worth Amount		$ 56,963,148	$ 33,763,745	$ 33,763,745	$ 7,163,200	**Wastewater Total** $ [illegible]

Present Worth (Recycled)	**2010**	**2015**	**2020**	**2025**	**2030**		
Interest Rate		2%	2%	2%	2%		
Uniform Amount per Interest Period		$ 97,888	$ 345,688	$ 1,229,060	$ 217,280		
Factor Table		4.7135	4.7135	4.7135	1.0000		
O&M Present Worth		$ 461,395	$ 1,629,400	$ 5,793,174	$ 217,280		
Capital Costs		$ -	$ -	$ -	$ -		
Present Worth Amount		$ 461,395	$ 1,629,400	$ 5,793,174	$ 217,280	**Recycled Total** $ [illegible]	**Total** $ 139,755,067

Table: D-1
Otay Water District
Wastewater Management Plan
Options Present Worth Analysis

Option D - Abandon and Demolish the Ralph W. Chapman Water Recycling Facility

w/o Chula Vista Purchase, w/o PLWWTP Upgrade

	Flows (MGD)					Flows (AFY)				
Wastewater	**2010**	**2015**	**2020**	**2025**	**2030**	**2010**	**2015**	**2020**	**2025**	**2030**
Total Metro Discharge [1]	1.84	1.93	1.97	2.09	2.15	2,061	2,162	2,206	2,341	2,408
Total District WW Flow	1.84	1.93	1.97	2.09	2.15	2,061	2,162	2,206	2,341	2,408
Recycled	**2010**	**2015**	**2020**	**2025**	**2030**	**2010**	**2015**	**2020**	**2025**	**2030**
Recycled Demand [2]	3.64	3.93	4.46	5.18	6.07	4,077	4,402	4,995	5,802	6,798
SBWRF Purchase	3.64	3.93	4.46	5.18	6.07	4,077	4,402	4,995	5,802	6,798
SBWRF Annual Contract Amount [3]	2.98	4.11	4.74	5.14	-	3,338	4,604	5,312	5,758	-

[1] Otay WD has a 1.231 MGD Metro capacity.
[2] Based on Recycled Water Memo 06-08-12
[3] Based on Recycled Purchase Agreement between City of San Diego and Otay WD.

w/o Chula Vista Purchase, w/o PLWWTP Upgrade

O&M Costs	**2010**	**2015**	**2020**	**2025**	**2030**
RW Cost (purchase SBWRF)	$ 1,429,883	$ 1,611,400	$ 1,859,200	$ 2,030,560	$ 2,379,440
Metro Discharge Cost	$ 5,664,927	$ 5,962,994	$ 6,086,579	$ 6,457,335	$ 6,642,713
PLWWTP Upgrade Cost	$ -	$ -	$ -	$ -	$ -
On-Site Solids Handling Power Cost [1]	$ -	$ -	$ -	$ -	$ -
On-Site Solids Handling Chemical Cost [1]	$ -	$ -	$ -	$ -	$ -
Power Cost [2]	$ -	$ -	$ -	$ -	$ -
Chemical Cost [1]	$ -	$ -	$ -	$ -	$ -
Collection/Treatment/Operation [2]	$ -	$ -	$ -	$ -	$ -
RWCWRF Operating Cost [2]	$ -	$ -	$ -	$ -	$ -

Capital Costs	**2010**	**2015**	**2020**	**2025**	**2030**
Decommission/Demolition cost [1]	$ -	$ 3,955,800	$ -	$ -	$ -
PLWWTP Upgrade Cost	$ -	$ -	$ -	$ -	$ -
Additional Metro Cost [2]	$ -	$ -	$ -	$ -	$ 27,570,000

[1] Based on Final RWCWRF Capital Cost Assessment 10-29-12.
[2] Per discussion with Rita Bell. $22 Million paid to Metro, $8 Million paid to the County.

Present Worth (Wastewater)	**2010**	**2015**	**2020**	**2025**	**2030**	
Interest Rate		2%	2%	2%	2%	
Uniform Amount per Interest Period		$ 5,962,994	$ 6,086,579	$ 6,457,335	$ 6,642,713	
Factor Table		4.7135	4.7135	4.7135	1.0000	
O&M Present Worth		$ 28,106,570	$ 28,689,090	$ 30,436,649	$ 6,642,713	
Capital Costs		$ 3,955,800	$ -	$ -	$ 27,570,000	**Wastewater Total**
Present Worth Amount		$ 32,062,370	$ 28,689,090	$ 30,436,649	$ 34,212,713	[illegible]

Present Worth (Recycled)	**2010**	**2015**	**2020**	**2025**	**2030**		
Interest Rate		2%	2%	2%	2%		
Uniform Amount per Interest Period		$ 1,611,400	$ 1,859,200	$ 2,030,560	$ 2,379,440		
Factor Table		4.7135	4.7135	4.7135	1.0000		
O&M Present Worth		$ 7,595,334	$ 8,763,339	$ 9,571,045	$ 2,379,440		
Capital Costs		$ -	$ -	$ -	$ -	**Recycled Total**	**Total**
Present Worth Amount		$ 7,595,334	$ 8,763,339	$ 9,571,045	$ 2,379,440	[illegible]	$ 153,709,860

w/o Chula Vista Purchase, w/ PLWWTP Upgrade

	Flows (MGD)					Flows (AFY)				
Wastewater	**2010**	**2015**	**2020**	**2025**	**2030**	**2010**	**2015**	**2020**	**2025**	**2030**
Total Metro Discharge [1]	1.84	1.93	1.97	2.09	2.15	2,061	2,162	2,206	2,341	2,408
Total District WW Flow	1.84	1.93	1.97	2.09	2.15	2,061	2,162	2,206	2,341	2,408
Recycled	**2010**	**2015**	**2020**	**2025**	**2030**	**2010**	**2015**	**2020**	**2025**	**2030**
Recycled Demand [2]	3.64	3.93	4.46	5.18	6.07	4,077	4,402	4,995	5,802	6,798
SBWRF Purchase	3.64	3.93	4.46	5.18	6.07	4,077	4,402	4,995	5,802	6,798
SBWRF Annual Contract Amount [3]	2.98	4.11	4.74	5.14	-	3,338	4,604	5,312	5,758	-

[1] Otay WD has a 1.231 MGD Metro capacity.

[2] Based on Recycled Water Memo 06-08-12.

[3] Based on Recycled Purchase Agreement between City of San Diego and Otay WD.

w/o Chula Vista Purchase, w/ PLWWTP Upgrade

O&M Costs	**2010**	**2015**	**2020**	**2025**	**2030**
RW Cost (purchase SBWRF)	$ 1,426,560	$ 1,611,400	$ 1,859,200	$ 2,030,560	$ 2,379,440
Metro Discharge Cost	$ 5,684,027	$ 5,962,994	$ 6,096,579	$ 6,407,035	$ 6,642,715
PLWWTP Upgrade Cost	$ -	$ -	$ 307,788	$ 326,557	$ 335,911
On-Site Solids Handling Power Cost [1]	$ -	$ -	$ -	$ -	$ -
On-Site Solids Handling Chemical Cost [1]	$ -	$ -	$ -	$ -	$ -
Power Cost [2]	$ -	$ -	$ -	$ -	$ -
Chemical Cost [1]	$ -	$ -	$ -	$ -	$ -
Collection/Treatment/Operation [2]	$ -	$ -	$ -	$ -	$ -
RWCWRF Operating Cost [2]	$ -	$ -	$ -	$ -	$ -

Capital Costs	**2010**	**2015**	**2020**	**2025**	**2030**
Decommission/Demolition cost [1]	$ -	$ 3,955,800	$ -	$ -	$ -
PLWWTP Upgrade Cost	$ -	$ -	$ 5,956,828	$ -	$ -
Additional Metro Cost [2]	$ -	$ -	$ -	$ -	$ 27,570,000

[1] Based on Final RWCWRF Capital Cost Assessment 10-29-12.

[2] Per discussion with Rita Bell. $22 Million paid to Metro, $8 Million paid to the County.

Present Worth (Wastewater)	**2010**	**2015**	**2020**	**2025**	**2030**	
Interest Rate		2%	2%	2%	2%	
Uniform Amount per Interest Period		$ 5,962,994	$ 6,394,367	$ 6,783,872	$ 6,978,624	
Factor Table		4.7135	4.7135	4.7135	1.0000	
O&M Present Worth		$ 28,106,570	$ 30,139,850	$ 31,975,780	$ 6,978,624	
Capital Costs		$ 3,955,800	$ 5,956,828	$ -	$ 27,570,000	**Wastewater Total**
Present Worth Amount		$ 32,062,370	$ 36,096,678	$ 31,975,780	$ 34,548,624	[illegible]

Present Worth (Recycled)	**2010**	**2015**	**2020**	**2025**	**2030**		
Interest Rate		2%	2%	2%	2%		
Uniform Amount per Interest Period		$ 1,611,400	$ 1,859,200	$ 2,030,560	$ 2,379,440		
Factor Table		4.7135	4.7135	4.7135	1.0000		
O&M Present Worth		$ 7,595,334	$ 8,763,339	$ 9,571,045	$ 2,379,440		
Capital Costs		$ -	$ -	$ -	$ -	**Recycled Total**	**Total**
Present Worth Amount		$ 7,595,334	$ 8,763,339	$ 9,571,045	$ 2,379,440	[illegible]	$ 162,992,611

	w/ Chula Vista Purchase, w/o PLWWTP Upgrade									
	Flows (MGD)					Flows (AFY)				
Recycled	**2010**	**2015**	**2020**	**2025**	**2030**	**2010**	**2015**	**2020**	**2025**	**2030**
Chula Vista Available [1]	-	-	2.00	4.00	6.00	-	-	2,240	4,480	6,720
Chula Vista Purchase	-	-	2.00	4.00	6.00	-	-	2,240	4,480	6,720
SBWRF Purchase	3.64	3.93	2.46	1.18	0.07	4,077	4,402	2,755	1,322	78

[1] Based on City of Chula Vista's Acquisition of Additional Wastewater Capacity Project Final Report April 2012

	w/ Chula Vista Purchase, w/o PLWWTP Upgrade				
O&M Costs	**2010**	**2015**	**2020**	**2025**	**2030**
RW Cost (purchase Chula Vista)	$ -	$ -	$ 784,000	$ 1,568,000	$ 2,352,000
RW Cost (purchase SBWRF)	$ 1,425,880	$ 1,540,560	$ 924,320	$ 462,560	$ 27,440
Metro Discharge Cost	$ 5,684,927	$ 5,962,994	$ 6,086,579	$ 6,457,335	$ 6,642,713
PLWWTP Upgrade Cost	$ -	$ -	$ -	$ -	$ -
On-Site Solids Handling Power Cost [1]	$ -	$ -	$ -	$ -	$ -
On-Site Solids Handling Chemical Cost [1]	$ -	$ -	$ -	$ -	$ -
Power Cost [2]	$ -	$ -	$ -	$ -	$ -
Chemical Cost [1]	$ -	$ -	$ -	$ -	$ -
Collection/Treatment/Operation [2]	$ -	$ -	$ -	$ -	$ -
RWCWRF Operating Cost [2]	$ -	$ -	$ -	$ -	$ -
Capital Costs	**2010**	**2015**	**2020**	**2025**	**2030**
Decommission/Demolition cost [1]	$ -	$ 3,955,800	$ -	$ -	$ -
PLWWTP Upgrade Cost	$ -	$ -	$ -	$ -	$ -
Additional Metro Cost [2]	$ -	$ -	$ -	$ -	$ 27,570,000
Chula Vista Pump Station/Pipeline [3]	$ -	$ -	$ 3,960,000	$ -	$ -

[1] Based on Final RWCWRF Capital Cost Assessment 10-29-12

[2] Per discussion with Rita Bell, $22 Million paid to Metro, $8 Million paid to the County.

[3] 6 MGD Pump Station (600 hp), 8000 LF of Pipeline.

Present Worth (Wastewater)	**2010**	**2015**	**2020**	**2025**	**2030**	
Interest Rate		2%	2%	2%	2%	
Uniform Amount per Interest Period		$ 5,962,994	$ 6,086,579	$ 6,457,335	$ 6,642,713	
Factor Table		4.7135	4.7135	4.7135	1.0000	
O&M Present Worth		$ 28,106,570	$ 28,689,090	$ 30,436,649	$ 6,642,713	
Capital Costs		$ 3,955,800	$ -	$ -	$ 27,570,000	**Wastewater Total**
Present Worth Amount		$ 32,062,370	$ 28,689,090	$ 30,436,649	$ 34,212,713	

Present Worth (Recycled)	**2010**	**2015**	**2020**	**2025**	**2030**		
Interest Rate		2%	2%	2%	2%		
Uniform Amount per Interest Period		$ 1,540,560	$ 1,748,320	$ 2,030,560	$ 2,379,440		
Factor Table		4.7135	4.7135	4.7135	1.0000		
O&M Present Worth		$ 7,261,430	$ 8,240,706	$ 9,571,045	$ 2,379,440		
Capital Costs		$ -	$ 3,960,000	$ -	$ -	**Recycled Total**	**Total**
Present Worth Amount		$ 7,261,430	$ 12,200,706	$ 9,571,045	$ 2,379,440		$ 156,813,449

	w/ Chula Vista Purchase, w/ PLWWTP Upgrade									
	Flows (MGD)					Flows (AFY)				
Recycled	**2010**	**2015**	**2020**	**2025**	**2030**	**2010**	**2015**	**2020**	**2025**	**2030**
Chula Vista Available [1]	-	-	2.00	4.00	6.00	-	-	2,240	4,480	6,720
Chula Vista Purchase	-	-	2.00	4.00	6.00	-	-	2,240	4,480	6,720
SBWRF Purchase	3.64	3.93	2.46	1.18	0.07	4,077	4,402	2,755	1,322	78

[1] Based on City of Chula Vista's Acquisition of Additional Wastewater Capacity Project Final Report April 2012

	w/ Chula Vista Purchase, w/ PLWWTP Upgrade				
O&M Costs	**2010**	**2015**	**2020**	**2025**	**2030**
RW Cost (purchase Chula Vista)	$ -	$ -	$ 784,000	$ 1,568,000	$ 2,352,000
RW Cost (purchase SBWRF)	$ 1,425,880	$ 1,540,560	$ 964,320	$ 462,560	$ 27,440
Metro Discharge Cost	$ 5,684,027	$ 1,962,994	$ 6,086,579	$ 6,457,335	$ 6,642,713
PLWWTP Upgrade Cost	$ -	$ -	$ 307,788	$ 326,537	$ 335,911
On-Site Solids Handling Power Cost [1]	$ -	$ -	$ -	$ -	$ -
On-Site Solids Handling Chemical Cost [1]	$ -	$ -	$ -	$ -	$ -
Power Cost [2]	$ -	$ -	$ -	$ -	$ -
Chemical Cost [1]	$ -	$ -	$ -	$ -	$ -
Collection/Treatment/Operation [2]	$ -	$ -	$ -	$ -	$ -
RWCWRF Operating Cost [2]	$ -	$ -	$ -	$ -	$ -
Capital Costs	**2010**	**2015**	**2020**	**2025**	**2030**
Decommission/Demolition cost [1]	$ -	$ 3,955,800	$ -	$ -	$ -
PLWWTP Upgrade Cost	$ -	$ -	$ 5,956,828	$ -	$ -
Additional Metro Cost [2]	$ -	$ -	$ -	$ -	$ 27,570,000
Chula Vista Pump Station/Pipeline [3]	$ -	$ -	$ 3,960,000	$ -	$ -

[1] Based on Final RWCWRF Capital Cost Assessment 10-29-12

[2] Per discussion with Rita Bell. $22 Million paid to Metro, $8 Million paid to the County.

[3] 6 MGD Pump Station (600 hp), 8000 LF of Pipeline.

Present Worth (Wastewater)	**2010**	**2015**	**2020**	**2025**	**2030**	
Interest Rate		2%	2%	2%	2%	
Uniform Amount per Interest Period		$ 5,962,994	$ 6,394,367	$ 6,783,872	$ 6,978,624	
Factor Table		4.7135	4.7135	4.7135	1.0000	
O&M Present Worth		$ 28,106,570	$ 30,139,850	$ 31,975,780	$ 6,978,624	
Capital Costs		$ 3,955,800	$ 5,956,828	$ -	$ 27,570,000	**Wastewater Total**
Present Worth Amount		$ 32,062,370	$ 36,096,678	$ 31,975,780	$ 34,548,624	[illegible]

Present Worth (Recycled)	**2010**	**2015**	**2020**	**2025**	**2030**		
Interest Rate		2%	2%	2%	2%		
Uniform Amount per Interest Period		$ 1,540,560	$ 1,748,320	$ 2,030,560	$ 2,379,440		
Factor Table		4.7135	4.7135	4.7135	1.0000		
O&M Present Worth		$ 7,261,430	$ 8,240,706	$ 9,571,045	$ 2,379,440		
Capital Costs		$ -	$ 3,960,000	$ -	$ -	**Recycled Total**	**Total**
Present Worth Amount		$ 7,261,430	$ 12,200,706	$ 9,571,045	$ 2,379,440	[illegible]	$ 166,096,074

Table: E1
Otay Water District
Wastewater Management Plan
Options Present Worth Analysis

Option E - Abandon and Demolish the Ralph W. Chapman Water Recycling Facility and Participate in a New Joing Wastewater Treatment and Recycling Facility with San Diego County

w/o PLWWTP Upgrade

	Flows (MGD)					Flows (AFY)				
Wastewater	**2010**	**2015**	**2020**	**2025**	**2030**	**2010**	**2015**	**2020**	**2025**	**2030**
Total Metro Discharge [1]	1.84	1.93	-	-	-	2,061	2,162	-	-	-
Total District WW Flow	1.84	1.93	1.97	2.09	2.15	2,061	2,162	2,206	2,341	2,408
Recycled	**2010**	**2015**	**2020**	**2025**	**2030**	**2010**	**2015**	**2020**	**2025**	**2030**
Joint Project Production	-	-	6.00	8.00	10.00	-	-	6,720	8,960	11,200
Joint Project Purchase	-	-	1.97	2.09	2.15	-	-	2,206	2,341	2,408
Recycled Demand [2]	3.64	3.93	4.46	5.18	6.07	4,077	4,402	4,995	5,802	6,798
SBWRF Purchase	3.64	3.93	2.49	3.09	3.92	4,077	4,402	2,789	3,461	4,390
SBWRF Annual Contract Amount [3]	2.98	4.11	4.74	5.14	-	3,338	4,604	5,312	5,758	-

[1] Otay WD has a 1.231 MGD Metro capacity.
[2] Based on Recycled Water Memo 06-08-12.
[3] Based on Recycled Purchase Agreement between City of San Diego and Otay WD.

w/o PLWWTP Upgrade

O&M Costs	**2010**	**2015**	**2020**	**2025**	**2030**
RW Cost (purchase Joint Project)	$ -	$ -	$ 772,040	$ 810,095	$ 882,800
RW Cost (purchase SBWRF)	$ 1,428,800	$ 1,611,400	$ 1,859,200	$ 2,015,300	$ 1,536,640
Metro Discharge Cost	$ 5,684,897	$ 5,562,984	$ -	$ -	$ -
PLWWTP Upgrade Cost	$ -	$ -	$ -	$ -	$ -
Joint Project Cost (22%) [1]	$ -	$ -	$ 906,583	$ 1,530,083	$ 2,150,000

Capital Costs	**2010**	**2015**	**2020**	**2025**	**2030**
Total Joint Project Cost [1]	$ -	$ -	$ 119,066,667	$ 34,033,333	$ 37,466,667
Otay Joint Project Cost (22%) [1]	$ -	$ -	$ 25,599,333	$ 7,510,667	$ 8,055,333
Decommission/Demolition cost [1]	$ -	$ 3,955,800	$ -	$ -	$ -
Additional Metro Cost [2]	$ -	$ 20,970,000	$ -	$ -	$ -
PLWWTP Upgrade Cost	$ -	$ -	$ -	$ -	$ -
Joint Project Pump Station/Pipeline [3]	$ -	$ -	$ 4,440,000	$ -	$ -

[1] Based on City of Chula Vista's Acquisition of Additional Wastewater Capacity Project Final Report April 2012
[2] Per discussion with Rita Bell. $22 Million paid to Metro, $8 Million paid to the County
[3] 10 MGD Pump Station (900 hp), 7000 LF of Pipeline

Present Worth (Wastewater)	**2010**	**2015**	**2020**	**2025**	**2030**	
Interest Rate		2%	2%	2%	2%	
Uniform Amount per Interest Period		$ 5,962,994	$ 906,583	$ 1,530,083	$ 2,150,000	
Factor Table		4.7135	4.7135	4.7135	1.0000	
O&M Present Worth		$ 28,106,570	$ 4,273,181	$ 7,212,048	$ 2,150,000	
Capital Costs		$ 24,925,800	$ 25,599,333	$ 7,510,667	$ 8,055,333	**Wastewater Total**
Present Worth Amount		$ 53,032,370	$ 29,872,514	$ 14,722,715	$ 10,205,333	[illegible]

Present Worth (Recycled)	**2010**	**2015**	**2020**	**2025**	**2030**		
Interest Rate		2%	2%	2%	2%		
Uniform Amount per Interest Period		$ 1,611,400	$ 2,631,440	$ 2,834,580	$ 2,379,440		
Factor Table		4.7135	4.7135	4.7135	1.0000		
O&M Present Worth		$ 7,595,334	$ 12,403,292	$ 13,360,793	$ 2,379,440		
Capital Costs		$ -	$ 4,440,000	$ -	$ -	**Recycled Total**	**Total**
Present Worth Amount		$ 7,595,334	$ 16,843,292	$ 13,360,793	$ 2,379,440	[illegible]	$ 148,011,792

	w/ PLWWTP Upgrade									
	Flows (MGD)					Flows (AFY)				
Wastewater	**2010**	**2015**	**2020**	**2025**	**2030**	**2010**	**2015**	**2020**	**2025**	**2030**
Total Metro Discharge [1]	1.84	1.93	-	-	-	2,061	2,162	-	-	-
Total District WW Flow	1.84	1.93	1.97	2.09	2.15	2,061	2,162	2,206	2,341	2,408
Recycled	**2010**	**2015**	**2020**	**2025**	**2030**	**2010**	**2015**	**2020**	**2025**	**2030**
Joint Project Production	-	-	6.00	8.00	10.00	-	-	6,720	8,960	11,200
Joint Project Purchase	-	-	1.97	2.09	2.15	-	-	2,206	2,341	2,408
Recycled Demand [2]	3.64	3.93	4.46	5.18	6.07	4,077	4,402	4,995	5,802	6,798
SBWRF Purchase	3.64	3.93	2.49	3.09	3.92	4,077	4,402	2,789	3,461	4,390
SBWRF Annual Contract Amount [3]	2.98	4.11	4.74	5.14	-	3,338	4,604	5,312	5,758	-

[1] Otay WD has a 1.231 MGD Metro capacity

[2] Based on Recycled Water Memo 06-08-12.

[3] Based on Recycled Purchase Agreement between City of San Diego and Otay WD

	w/ PLWWTP Upgrade				
O&M Costs	**2010**	**2015**	**2020**	**2025**	**2030**
RW Cost (purchase Joint Project)	$ -	$ -	$ 772,240	$ 819,280	$ 842,800
RW Cost (purchase SBWRF)	$ 1,426,880	$ 1,611,400	$ 1,358,200	$ 2,015,300	$ 1,536,040
Metro Discharge Cost	$ 5,684,927	$ 5,962,994	$ -	$ -	$ -
PLWWTP Upgrade Cost	$ -	$ -	$ -	$ -	$ -
Joint Project Cost (22%) [1]	$ -	$ -	$ 906,583	$ 1,530,083	$ 2,150,000

Capital Costs	**2010**	**2015**	**2020**	**2025**	**2030**
Total Joint Project Cost [1]	$ -	$ -	$ 110,086,867	$ 34,933,333	$ 37,466,667
Otay Joint Project Cost (22%) [1]	$ -	$ -	$ 25,598,333	$ 7,510,667	$ 8,055,333
Decommission/Demolition cost [1]	$ -	$ 3,955,800	$ -	$ -	$ -
Additional Metro Cost [2]	$ -	$ 20 970,000	$ -	$ -	$ -
PLWWTP Upgrade Cost	$ -	$ -	$ 5 956 828	$ -	$ -
Joint Project Pump Station/Pipeline [3]	$ -	$ -	$ 4,440,000	$ -	$ -

[1] Based on City of Chula Vista's Acquisition of Additional Wastewater Capacity Project Final Report April 2012

[2] Per discussion with Rita Bell. $22 Million paid to Metro, $8 Million paid to the County.

[3] 10 MGD Pump Station (900 hp), 7000 LF of Pipeline

Present Worth (Wastewater)	**2010**	**2015**	**2020**	**2025**	**2030**	
Interest Rate		2%	2%	2%	2%	
Uniform Amount per Interest Period		$ 5,962,994	$ 906,583	$ 1,530,083	$ 2,150,000	
Factor Table		4.7135	4.7135	4.7135	1.0000	
O&M Present Worth		$ 28,106,570	$ 4,273,181	$ 7,212,048	$ 2,150,000	
Capital Costs		$ 24,925,800	$ 31,556,161	$ 7,510,667	$ 8,055,333	**Wastewater Total**
Present Worth Amount		$ 53,032,370	$ 35,829,342	$ 14,722,715	$ 10,205,333	

Present Worth (Recycled)	**2010**	**2015**	**2020**	**2025**	**2030**		
Interest Rate		2%	2%	2%	2%		
Uniform Amount per Interest Period		$ 1,611,400	$ 2,631,440	$ 2,834,580	$ 2,379,440		
Factor Table		4.7135	4.7135	4.7135	1.0000		
O&M Present Worth		$ 7,595,334	$ 12,403,292	$ 13,360,793	$ 2,379,440		
Capital Costs		$ -	$ 4,440,000	$ -	$ -	**Recycled Total**	**Total**
Present Worth Amount		$ 7,595,334	$ 16,843,292	$ 13,360,793	$ 2,379,440		$ 153,968,619