OTAY WATER DISTRICT
FINANCE, ADMINISTRATION AND COMMUNICATIONS
COMMITTEE MEETING
and
SPECIAL MEETING OF THE BOARD OF DIRECTORS

2554 SWEETWATER SPRINGS BOULEVARD
SPRING VALLEY, CALIFORNIA
BOARDROOM

TUESDAY
October 23, 2012
11:30 A.M.

This is a District Committee meeting. This meeting is being posted as a special meeting in order to comply with the Brown Act (Government Code Section §54954.2) in the event that a quorum of the Board is present. Items will be deliberated, however, no formal board actions will be taken at this meeting. The committee makes recommendations to the full board for its consideration and formal action.

AGENDA

1. ROLL CALL

2. PUBLIC PARTICIPATION – OPPORTUNITY FOR MEMBERS OF THE PUBLIC TO SPEAK TO THE BOARD ON ANY SUBJECT MATTER WITHIN THE BOARD'S JURISDICTION BUT NOT AN ITEM ON TODAY'S AGENDA

DISCUSSION ITEMS

3. ADOPT RESOLUTION NO. 4205 TO AUTHORIZE THE GENERAL MANAGER TO IMPLEMENT REQUIREMENTS OF THE CALIFORNIA PUBLIC EMPLOYEES' PENSION REFORM ACT OF 2013, WHICH WILL BECOME EFFECTIVE JANUARY 1, 2013, AND ADOPT RESOLUTION NO. 4206 TO AMEND RETIREE HEALTH BENEFITS FOR UNREPRESENTED EMPLOYEES HIRED ON OR AFTER JANUARY 1, 2013 (WILLIAMSON) [5 minutes]

4. ADOPT ORDINANCE NO. 536 AMENDING THE DISTRICT'S CODE OF ORDINANCES SECTION 2.01, AUTHORITY OF THE GENERAL MANAGER, TO FORMALIZE THE GENERAL MANAGER'S OR DESIGNEE'S AUTHORITY TO MANAGE COLLECTION ACTIVITIES (MENDEZ-SCHOMER) [5 minutes]

5. APPROVE THE DISTRICT'S AUDITED FINANCIAL STATEMENTS, INCLUDING THE INDEPENDENT AUDITORS' UNQUALIFIED OPINION, FOR FISCAL YEAR ENDED JUNE 30, 2012 (KOEPPEN) [5 minutes]

6. APPROVE A 3-YEAR O&M AGREEMENT WITH SOFTCHOICE CORPORATION FOR MICROSOFT SOFTWARE LICENSE SUPPORT IN THE AMOUNT OF $250,638.00, CONSISTING OF THREE (3) ANNUAL PAYMENTS OF APPROXIMATELY $83,546.00 (STEVENS) [5 minutes]

7. APPROVE THE ISSUANCE OF A PURCHASE ORDER TO HAAKER EQUIPMENT COMPANY IN THE AMOUNT OF $366,118.33 FOR THE PURCHASE OF ONE (1) NEW VACTOR MODEL 2110 PLUS JET RODDER TRUCK; AND DECLARE UNIT 110, A 1999 VACTOR JET RODDER TRUCK SURPLUS TO THE DISTRICT'S NEEDS AND AUTHORIZE FOR DISPOSAL IN ACCORDANCE WITH THE DISTRICT'S ESTABLISHED SURPLUS DISPOSAL PROCEDURES (MARTINEZ) [5 minutes]

8. UPDATE INFORMATIONAL REPORT ON THE PROPOSED APPLICATION TO THE PUBLIC UTILITIES COMMISSION OF THE STATE OF CALIFORNIA (CPUC) BY SAN DIEGO GAS & ELECTRIC (SDG&E) FOR THE AUTHORITY TO UPDATE MARGINAL COSTS, COST ALLOCATION, AND ELECTRIC RATE DESIGN (KENNEDY) [5 minutes]

9. ADJOURNMENT

BOARD MEMBERS ATTENDING:
Jose Lopez, Chair
Mitch Thompson

All items appearing on this agenda, whether or not expressly listed for action, may be deliberated and may be subject to action by the Board.

The Agenda, and any attachments containing written information, are available at the District's website at www.otaywater.gov. Written changes to any items to be considered at the open meeting, or to any attachments, will be posted on the District's website. Copies of the Agenda and all attachments are also available through the District Secretary by contacting her at (619) 670-2280.

If you have any disability which would require accommodation in order to enable you to participate in this meeting, please call the District Secretary at 670-2280 at least 24 hours prior to the meeting.

Certification of Posting

I certify that on October 19, 2012 I posted a copy of the foregoing agenda near the regular meeting place of the Board of Directors of Otay Water District, said time being at least 24 hours in advance of the meeting of the Board of Directors (Government Code Section §54954.2).

Executed at Spring Valley, California on October 19, 2012.

_____/s/_ Susan Cruz, District Secretary _____

STAFF REPORT

TYPE MEETING:	Regular Board	MEETING DATE:	November 7, 2012
		PROJECT:	Various DIV. NO. ALL
SUBMITTED BY:	Kelli Williamson Human Resources Manager		
APPROVED BY:	☒ Rom Sarno, Chief of Administration ☒ German Alvarez, Asst. General Manager ☒ Mark Watton, General Manager		
SUBJECT:	ADOPT RESOLUTION #4205 TO AUTHORIZE THE GENERAL MANAGER TO IMPLEMENT THE REQUIREMENTS OF THE CALIFORNIA PUBLIC EMPLOYEES' PENSION REFORM ACT OF 2013 AND ADOPT RESOLUTION #4206 TO AMEND RETIREE HEALTH BENEFITS FOR UNREPRESENTED EMPLOYEES HIRED ON OR AFTER JANUARY 1, 2013		

GENERAL MANAGER'S RECOMMENDATION:

Adopt Resolution #4205 to authorize the General Manager to implement the requirements of the California Public Employees' Pension Reform Act of 2013 which will become effective January 1, 2013 and Resolution #4206 to amend Retiree Health Benefits for Unrepresented Employees hired on or after January 1, 2013.

COMMITTEE ACTION:

See Attachment A.

PURPOSE:

To request that the Board of Directors authorize the General Manager to take steps necessary to implement the requirements of the California Public Employees' Pension Reform Act of 2013.

ANALYSIS:

The California Public Employees' Pension Reform Act of 2013 (PEPRA) was signed into law on September 12, 2012 and will become effective on January 1, 2013. The purpose of the law is to lower the overall cost of pensions in California.

The following is a summary of some of the key provisions of the new law:

- New members are defined as any employee new to any public retirement system on or after 1/1/13, an individual who moved between retirement systems without reciprocity, or an individual who moved between retirement systems with more than a six month break in service
- New members will have the following Pension Plan effective 1/1/13:
  - 2% @ 62, up to 2.5% @ 67, early retirement 1% @ 52
  - Final compensation based on highest 36 months of employment
  - Cap based on the social security limit (2012 limit is $110,100)
  - Requires that all new members are offered the same retiree health benefits vesting schedule
  - New members must pay at least 50% of the Normal Cost of Benefits
- Requires employer to contribute the same percentage for all employees (upon negotiating a new labor agreement)
- Prohibits purchase of non-qualified service after 12/31/12, retro-active Pension increases, and enhanced supplemental Defined Benefit Plans
- Sets limits to Post-Retirement Public Employment
- Certain Felony convictions forfeit pension benefits

CalPERS is working to get information to the employers as soon as possible, given that the law goes into effect on January 1, 2013. Because of the fast-approaching effective date of the new provisions, the General Manager requests that the Board of Directors authorize the General Manager to take any and all steps necessary to implement the requirements of the California Public Employees' Pension Reform Act of 2013 to be in compliance with the law on January 1, 2013 including, but not limited to, executing documents required by CalPERS, implementing Memorandum of Understanding Side Letter Agreements, and instituting a uniform retiree health vesting schedule for all employees hired after January 1, 2013.

Resolution #4205

This Resolution authorizes and directs the General Manager to take any and all actions necessary to implement the required changes, including, but not limited to, adopting resolutions required by CalPERS, and entering into a Side Letter Agreements with the District's Represented Employees.

Resolution #4206

This Resolution authorizes an amendment to the Retiree Health Benefits for Unrepresented Employees hired on or after January 1, 2013 pursuant to the California Public Pension Reform Act of 2013. The current Memorandum of Understanding states that the District's Represented Employees require 20 years of employment, while the District's Unrepresented Employees, Resolution #4183, require 15 years of employment in order to receive Retiree Health Benefits at retirement. In order to provide an equal vesting schedule for all employees hired on or after January 1, 2013, newly-hired Unrepresented Employees will require 20 years of employment in order to receive Retiree Health Benefits.

Employee Association

The District will meet and discuss the required new provisions with The Otay Water District Employees Association as necessary and implement any required Side Letter Agreements.

FISCAL IMPACT: ☒ Joe Beachem, Chief Financial Officer

There will be no reduction to the existing unfunded liability for the Pension. There will be small savings in the Annual Required Contribution in the short term; however, it will take time for any material savings to appear depending on how much turnover agencies have. Representatives from CalPERS indicate that it will be 25-30 years to realize significant savings.

With regard to Retiree Health Benefits, the increase in vesting period for Unrepresented Employees hired after January 1, 2013 will be provided to the Actuary and included in future actuarial studies that are conducted every two years. The change is also likely to be small in the short term and will increase over time.

STRATEGIC GOAL:
N/A

LEGAL IMPACT:
N/A

Attachments: Attachment A – Committee Action
Attachment B – Resolution #4205
Attachment C – Resolution #4206
Attachment D – Powerpoint Presentation

ATTACHMENT A

SUBJECT/PROJECT:	ADOPT RESOLUTION #4205 TO AUTHORIZE GENERAL MANAGER TO IMPLEMENT REQUIREMENTS OF THE CALIFORNIA PUBLIC EMPLOYEES' PENSION REFORM ACT OF 2013 WHICH WILL BECOME EFFECTIVE JANUARY 1, 2013 AND RESOLUTION #4206 TO AMEND RETIREE HEALTH BENEFITS FOR UNREPRESENTED EMPLOYEES HIRED ON OR AFTER JANUARY 1, 2013

COMMITTEE ACTION:

The Finance, Administration and Communications Committee met on October 23, 2012, to review this item. The Committee supports presentation to the full Board for their consideration.

NOTE:

The "Committee Action" is written in anticipation of the Committee moving the item forward for Board approval. This report will be sent to the Board as a committee approved item, or modified to reflect any discussion or changes as directed from the committee prior to presentation to the full Board.

Attachment B

RESOLUTION NO. 4205

RESOLUTION OF THE BOARD OF DIRECTORS

OF OTAY WATER DISTRICT TO AUTHORIZE

THE GENERAL MANAGER TO IMPLEMENT

REQUIREMENTS OF CALPERS RELATED TO CALIFORNIA

PUBLIC EMPLOYEES' PENSION REFORM ACT OF 2013

WHEREAS, the California state legislature recently enacted the California Public Employees' Pension Reform Act of 2013 (the "Act"); and

WHEREAS, the Act goes into effect on January 1, 2013 and requires a number of changes to the employee benefits provided by the Otay Water District ("District") to both new and existing employees; and

WHEREAS, in order to comply with the January 1, 2013 effective date for some of the changes required by the Act, a number of actions will likely be required, including, but not limited to, adopting resolutions required by CalPERS, and entering into side letter agreements with the District's Represented Employees, prior to January 1, 2013,

NOW, THEREFORE, BE IT RESOLVED that the Board of Directors of the Otay Water District authorizes and directs the General Manager to take any and all actions necessary to implement the changes required by the California Public Employees' Pension Reform Act of 2013.

_____

President

ATTEST:

_____

Secretary

Attachment B

APPROVED AS TO FORM:

_____
District Counsel

I HEREBY CERTIFY that the foregoing Resolution No. 4205 was duly adopted by the BOARD OF DIRECTORS of the OTAY WATER DISTRICT at a regular meeting thereof held on the 7th day of November, 2012 by the following vote:

Ayes:

Noes:

Abstain:

Absent:

_____
District Secretary

Attachment C

RESOLUTION NO. 4206

RESOLUTION OF THE BOARD OF DIRECTORS OF THE
OTAY WATER DISTRICT TO AMEND
RETIREE HEALTH BENEFITS FOR UNREPRESENTED
EMPLOYEES HIRED ON OR AFTER JANUARY 1, 2013,
PURSUANT TO THE CALIFORNIA PUBLIC EMPLOYEES'
PENSION REFORM ACT OF 2013

WHEREAS, in July and August of 2011, the Otay Water District ("District") approved changes to the level of Retiree Health Benefits for both Unrepresented and Represented Employees; and

WHEREAS, subsequent to the approval and implementation of said retiree health benefits, the California Public Employees' Pension Reform Act of 2013 (the "Act") was enacted; and

WHEREAS, the District endeavors to comply with the Act, including newly added Government Code section 7522.40 relating to health benefit vesting schedules; and

WHEREAS, the District's Represented Employees require 20 years of employment under the current Memorandum of Understanding while the District's Unrepresented Employees require 15 years of employment under the current resolution in order to receive Retiree Health Benefits at retirement and, in order to provide an equal health benefit vesting schedule for all employees hired after January 1,

2013, Unrepresented Employees hired on or after January 1, 2013 will all require 20 years of employment; and

WHEREAS, this Resolution is intended only to identify the above changes to the Unrepresented Employees' Retiree Health Plan and is in no way intended to nor shall it affect all other compensation and benefits for Unrepresented Employees, as documented in other policies, procedures, resolutions and other documents which specifically identify such compensation and benefits, and which compensation and benefits shall remain in full force and effect unless specifically set forth herein,

NOW, THEREFORE, BE IT RESOLVED by the Board of Directors of the Otay Water District as follows:

1. That the Board of Directors hereby approves the changes to retiree health benefits for any Unrepresented Employees hired on or after January 1, 2013. These employees will be required to have 20 years of service instead of 15 years of service in order to receive the Retiree Health Benefits; and

2. The effective date of this resolution shall be November 7, 2012.

BE IT FURTHER RESOLVED that the Board authorizes and directs the appropriate staff of the District to take any and all actions necessary to implement the above-referenced changes.

Attachment C

PASSED, APPROVED AND ADOPTED by the Board of Directors of the Otay Water District at a regular meeting held this 7th day of November, 2012.

_____
President

ATTEST:

_____
Secretary

APPROVED AS TO FORM:

_____
District Counsel

I HEREBY CERTIFY that the foregoing Resolution No. 4206 was duly adopted by the BOARD OF DIRECTORS of the OTAY WATER DISTRICT at a regular meeting thereof held on the 7th day of November, 2012 by the following vote:

Ayes:

Noes:

Abstain:

Absent:

_____
District Secretary

THE CALIFORNIA PUBLIC EMPLOYEES' PENSION REFORM ACT OF 2013 (PEPRA)

October 2012

Pension Reform Summary

- Will go into effect January 1, 2013
- Objective is to lower the overall cost of pensions in California
- More impact on new employees/members than current employees/members

New Members

- New members defined as:
  - New to any public retirement system on or after 1/1/13; or
  - An individual who moved between retirement systems without reciprocity; or
  - An individual who moved between retirement systems with more than six months break in service

Pension Reform Overview

- Reduced Benefit Formulas and Increased Retirement Ages (New Members)
  - 2% at age 62 up to max of 2.5% at age 67
  - New minimum retirement at age 52 with 1%
- (Current Members - 2.7% at age 55 with minimum retirement at age 50 with 2%)

Pension Reform Overview

- Requires Three-Year Final Compensation (New Members)
  - Final compensation based on the highest three-year average for New Members
  - (Current Members - Final compensation based on the highest single year average)

Pension Reform Overview

- **Cap Compensation Earnable for Calculating Pension Benefits** (New Members)
  - For 2012 cap is $110,100 for those in Social Security
  - For 2012 cap is $132,120 for those not in Social Security
  - Up to 2% COLA each year is allowed
  - (Current Members – Cap at $250,000; Up to 2% COLA each year unless Agency contracts for higher level)

Pension Reform Overview

- Requires all New Members to pay at least 50% of the Normal Cost of Benefits
- Requires employer to contribute the same percentage for all employees (upon negotiating a new labor agreement)

Retiree Health Benefits

- Requires that all New Members are offered the same retiree health benefits vesting schedule
  - Current Members
    - Unrepresented – 15 years
    - Represented – 20 years
  - New Members – 20 years for Represented/Unrepresented

Pension Reform Overview

- Additional Provisions that Apply to All Members:
  - Prohibits Purchase of Non-qualified Service after 12/31/12 ("Air Time")
  - Prohibits Enhanced Supplemental Defined Benefit Plans
  - Prohibits Retroactive Pension Increases
  - Sets Limits to Post-Retirement Public Employment
  - Certain Felony Convictions Forfeit Pension Benefits

Employees Association

- The District will meet and discuss the required new provisions with the Association as necessary and implement any required Side Letter Agreements.

General Manager's Recommendation

- Authorize the General Manager to implement requirements of the California Public Employees' Pension Reform Act of 2013
  - Adopt Resolution #4205 to authorize the General Manager to implement requirements of the Act which will become effective January 1, 2013
  - Adopt Resolution #4206 to amend Retiree Health Benefits for Unrepresented Employees hired on or after January 1, 2013

STAFF REPORT

TYPE MEETING:	Regular Board	MEETING DATE:	November 7, 2012
		PROJECT:	DIV. NO. All
SUBMITTED BY:	Alicia Mendez Schomer, Customer Service Manager		
APPROVED BY:	☒ Joseph R. Beachem, Chief Financial Officer		
	☒ German Alvarez, Assistant General Manager		
	☒ Mark Watton, General Manager		
SUBJECT:	Adopt Ordinance No. 536 Amending the District's Code of Ordinances Section 2.01, Authority of the General Manager, to Formalize the General Manager's or Designee's Authority to Manage Collection Activities		

GENERAL MANAGER'S RECOMMENDATION:

That the Board adopt Ordinance No. 536 amending the District's Code of Ordinances Section 2.01, Authority of the General Manager, to formalize the General Manager's or designee's authority to manage collection activities.

COMMITTEE ACTION:

See Attachment A.

PURPOSE:

To clarify the General Manager's or designee's authority to waive payments, reduce payments, or extend payment plans for amounts due the District. These collection efforts are authorized only when it is in the best interest of the District. This change does not apply to or limit corrections for billing or meter reading errors, as outlined in Section 33.07 Adjustment for Meter Inaccuracies.

ANALYSIS:

The General Manager has broad authority to control the administration, maintenance, operation and construction of the water

and sewer systems and facilities of the District in an efficient manner. The inclusion of this language in Section 2.01, Authority of the General Manager, ensures that the Code of Ordinances expressly provides authority to the General Manager or his designee to oversee the collection efforts of all amounts due the District. These efforts are already a part of the District's collection efforts and this recommended code change only memorializes the authority in a more direct fashion. In the sections below, the internal and external collection efforts are described, along with the existing payment arrangement process.

Internal Collection Efforts

Partnered to every billing process is the collection effort. The District's finance department, more specifically the customer service division, has been responsible for the collection efforts since the District's inception. The District has had great success in the area of collections due in large part to the ability of the District to shut-off water service. This level of success is shared by most utilities. Below is a listing of the various collection efforts used by the District:

1. **Late Penalty** Section 34.02 of the Code of Ordinances authorizes a late payment charge of 5% of the total delinquent amount. This charge is applied if full payment is not made on or before the due date as printed on the customer's bill. In FY2012, Otay collected $763,578.00 in late fees.

2. **Lock Process**
   - Late notice message on current bill
   - Post card mailed
   - Courtesy call made (one call or two)
   - Account locked

Otay has approximately 50,000 accounts. On average, staff mails 1,750 postcards per month. The approximate cost of each postcard is $0.74, which includes printing, mailing and preparation by customer service representatives. An automated courtesy call is made after the postcard is sent and prior to the lock day. There is no additional fee to the District for making this call as it is a standard feature of our phone system. The District makes approximately 900 of these automated calls a month. An average of 370 accounts are locked per month. The cost of locking is offset by the $35 lock fee assessed to the customer.

Based on these numbers, about 3.5% of Otay's customers are sent a delinquent postcard each month and .74% of customers are locked every month. Over 80% of customers sent a postcard pay their past due balance before they are locked.

3. Lien Process

Owners who have closed accounts and have a balance greater than $100 are put into the lien process. In addition, any locked owner accounts (still active in our system) with a past due amount of more than $100 are added to this process. These owners are first sent an "Intent to Lien" letter requesting payment. If their payment is not received in 30 days, staff files a lien with the County.

Each lien processed costs the District approximately $8.00 in staff time and postage. Otay processes between 130 and 185 "Intent to Lien" letters a year and about 30% of customers pay after receiving this letter. The District collects on approximately 90% of its liens.

4. Collection via Property Tax Bills

Using the same criteria as the regular lien process, Otay recovers outstanding owner balances through the property's annual tax bill. This listing is mainly comprised of three groups of customers: (1) Unpaid sewer only accounts (2) Customers with wells on their property who fail to pay the monthly flat fee service, and (3) Owners with unpaid balances and no current account. On May 31st of each year, Otay compiles a list of owner accounts that are either closed or locked with a balance greater than $100. These owners are sent a letter stating that the account balance must be paid in 30 days or the balance will be rolled over to their property tax bill. In early July, owners that have not paid are sent a second letter notifying them that the balance has been sent to the County and will appear on their next property tax bill. In 2011, Otay sent 112 accounts totaling $35,231.76 in outstanding balances to the County. To date, the District has received $34,102.72. This is a collection rate of almost 97%. The cost of processing the tax liens is approximately $2.30 per account in staff time and postage.

5. Late Notices for Closed Accounts

Working with IT, customer service staff developed a new notice to send to customers after their account has been closed and a balance remains. This process began March 1st. Customers who have closed their accounts and have not paid their balance by the due date are sent a final bill. Currently, over 70% of customers pay after receiving this notice. The cost of this notice is approximately $1.10 in staff time and postage. Because this process was recently implemented, the full impact to the collection process cannot be determined. Based on preliminary results, staff anticipates that it will reduce the number of accounts being sent to outside collection agencies. Prior to this process being implemented, staff would review reports and manually send copies of closing bills to customers with outstanding balances 30 days after their account had closed. This new notice is more than just a copy of an old bill,

it states that the account is delinquent and payment is needed immediately to avoid further action.

External Collection Efforts

The District uses two external collection agencies. TekCollect is used for closed accounts that have provided a forwarding address. They provide what they call their Phase I collection activity. TekCollect will send three letters to attempt collection of the balance and do automated calling if the phone numbers the District provides are valid. They also report to credit bureaus for any balance over $100.00. TekCollect charges the District $7.00 per account for this service. Otay sends approximately 70 accounts to TekCollect each month. The District sent $139,960.89 in uncollected accounts to TekCollect from April 2011 to March 2012 and recovered $44,524.40. This is a recovery rate of 31.81%. If the fee of $7.00 is deducted from the collection, the collection percentage is 27.39%.

Continental is used for closed accounts that have not provided a forwarding address, residential accounts with high balances, or commercial accounts. These accounts require a greater effort to locate and the service uses skip tracing, live calling, and internet research. Like TekCollect, they report to credit bureaus any balance greater than $100. Continental Credit takes 40% of whatever they collect and reimburses Otay 60%. Staff sends approximately 60 accounts to Continental a month. From April 2011-March 2012, $136,006.62 was sent to Continental. Total recovery was $21,198.32 or 15.59%. From that total the 40% fee was kept by Continental, making Otay's recovery $12,718.99 or 9.35%.

Current Payment Arrangement Process

If the customer contacts the District during any of the above steps in the collection process and offers to pay any portion of the amount that is outstanding, standard industry accepted principals are used to maximize the collections success. These tools include waiving payments, reducing payments, and extending payment plans. These are only used when in the best interest of the District to increase the likelihood of collection.

As a matter of procedure, waivers or adjustments of fees and charges up to $25 can be handled by any Customer Service Representative (CSR). Customer Service Representative II's and the Senior Representatives are given authority to handle amounts up to $200. Waivers or adjustments through this level are executed by the CSRs and are all reviewed on a weekly basis by one of the Customer Service Managers. Amounts greater than $200 but less than $1,000 are verified and authorized by a Customer Service Manager prior to implementation. On a weekly basis, the Chief Financial Officer reviews amounts greater than $200 but less than $1,000. The General Manager authorizes amounts greater than $1,000 but not more than $10,000.

Whenever possible, outstanding amounts due the District are put on the customer's water or sewer account making the charges inseparable from the bill. This effort is the most cost effective as the collection process is in place for customer accounts.

Neighboring agencies all follow similar methods for collection recovery which are outlined in California Government Code sections:

- Section 60373 Notification prior to disconnect.
- Section 72101 Request for satisfactory payment arrangements.
- Section 72102 Authority to lien property for delinquent charges.

Code of Ordinances

The addition to Section 2.01 of the Code memorializes the existing process of collection. This clarifies the General Manager's or designee's authority to waive payments, reduce payments, or extend payment plans for amounts due the District. These collection efforts are authorized only when it is in the best interest of the District and ensures the efficient administration of the District's collections and claims activities.

FISCAL IMPACT:

None.

STRATEGIC GOAL:

Streamline customer service business processes.

LEGAL IMPACT:

None.

Attachments: Attachment A – Committee Action
Attachment B – Ordinance No. 536
Exhibit I – Strike-through Section 2.01
Exhibit II – Proposed Section 2.01

ATTACHMENT A

SUBJECT/PROJECT:	Adopt Ordinance No. 536 Amending the District's Code of Ordinances Section 2.01, Authority of the General Manager, to Formalize the General Manager's or Designee's Authority to Manage Collection Activities

COMMITTEE ACTION:

The Finance, Administration and Communications Committee recommends that the Board adopt Ordinance No. 536 amending the District's Code of Ordinances Section 2.01, Authority of the General Manager, to formalize the General Manager's or designee's authority to manage collection activities.

NOTE:

The "Committee Action" is written in anticipation of the Committee moving the item forward for board approval. This report will be sent to the Board as a committee approved item, or modified to reflect any discussion or changes as directed from the committee prior to presentation to the full board.

Attachment B

ORDINANCE NO. 536

AN ORDINANCE OF THE BOARD OF DIRECTORS OF
THE OTAY WATER DISTRICT
AMENDING SECTION 2.01, AUTHORITY OF THE GENERAL MANAGER

BE IT ORDAINED by the Board of Directors of Otay Water District that the District's Code of Ordinances Section 2.01, Authority of the General Manager, be amended as per Exhibit I (attached).

NOW, THEREFORE, BE IT RESOLVED that the new proposed Section 2.01, Authority of the General Manager (Exhibit II) of the Code of Ordinances shall become effective November 7, 2012.

PASSED, APPROVED AND ADOPTED by the Board of Directors of the Otay Water District at a regular meeting duly held this 7th day of November 2012, by the following roll call vote:

AYES:
NOES:
ABSENT:
ABSTAIN:

_____
President

ATTEST:

_____
District Secretary

Exhibit I

CHAPTER 2 ADMINISTRATION OF THE DISTRICT

SECTION 2 MANAGEMENT OF THE DISTRICT

2.01 AUTHORITY OF THE GENERAL MANAGER

Pursuant to Sections 71362 and 71363 of the California Water Code, and other applicable laws of the State of California, the General Manager shall, subject to the approval and direction of the Board of Directors, operate and manage the affairs of the District. The General Manager shall have the following specifically enumerated powers and authority:

A. To control the administration, maintenance, operation and construction of the water and sewer systems and facilities of the District in an efficient manner.

B. To employ and discharge all employees and assistants, other than those referred to in Section 71340 of the California Water Code, and to prescribe their duties and promulgate specific rules and regulations for such employees and assistants.

C. To promulgate policies and procedures necessary to enhance the security of the District and increase the transparency of District operations, including provisions for the disclosure of conflicts of interest by employees.

D. To establish the terms and conditions for collection of receivables, thereby facilitating the efficient administration of the District's receivables. The General Manager or designee is given this authority as well as the authority to waive, adjust, or reduce any receivable for amounts up to $10,000.

Formatted: Indent: First line: 0.5"

~~D~~E. To execute agreements, contracts, other documents, or commitments on behalf of the District where the amount involved does not exceed $50,000, provided that Public Works Contracts shall be awarded in compliance with applicable laws.

~~E~~F. To approve change orders to agreements, contracts, or other commitments on behalf of the District. If the underlying contract is awarded by the General Manager pursuant to paragraph 2.01-~~D~~E above, the cumulative value of the approved change orders and the underlying agreement, contract, or commitment shall not exceed the General Manager's signatory authority established above. If the underlying contract is awarded by the Board, the General Manager may approve change orders thereto in an aggregate amount not exceeding the General Manager's signatory authority established above.

~~F~~G. To approve plans, specifications, maps and agreements, and any other documents involving land development projects within the District.

~~G~~H. To authorize the use of District Real Property by third parties if all the following conditions are met: (a) the consideration is less than the General Manager's authority; and (b) the proposed use consists of an easement, license, access permit or other use of a portion of the District Real Property that will not interfere with the existing or anticipated uses of the District Real Property for District purposes; and (c) either (i) the term of the proposed use is 10 years or less, or (ii) the entity proposing to use the District Real Property is a regulated utility, governmental entity or not-for profit organization. All uses of District Real Property not contemplated herein or specifically authorized in other sections of this Code of Ordinance shall be presented to the Board of Directors for consideration.

1. The General Manager may establish terms and conditions for the use of and access to District Real Property contemplated herein, including administrative charges.

2. The use of any District Real Property shall require consideration satisfactory to the General Manager, which may be monetary compensation in an amount equal to the fair market value of the proposed use plus an administrative charge or may be in the form of a real property interest or other equivalent compensation or use.

3. "District real property" means and includes real property and interests thereon, such as fee interests, easements, licenses and other such interests acquired for various District purposes including but not limited to the construction, operation, access or maintenance of pipelines or other facilities necessary or convenient to the full exercise of the District's powers.

~~H~~I. To declare an emergency and, in such event, to have the additional powers specified in the District's emergency management plan, referred to as the National Incident Management System (NIMS), and below, pursuant to California Contract Code Section 22050. An emergency is a sudden, unexpected occurrence that poses a clear and imminent danger, requiring immediate action to prevent and mitigate the loss or impairment of life, health, property, or essential public services.

1. In a declared emergency, the General Manager may direct employees, take action to continue or restore service capability, and execute any contracts for necessary equipment, services, or supplies directly related and required by the emergency. Notwithstanding the limits imposed in the prior paragraphs of this Section 2.01, or by any other policy or guideline of the District, in an emergency, the General Manager may award and execute contracts for goods, services, work,

facility or improvement, without bidding and without regard to said limits, provided that the goods, services, work, facilities or improvements acquired or contracted for are of an urgent nature, directly and immediately required by the emergency. Any contract for goods or services with a value of more than $250,000 shall be subject to ratification by the Board at its first regularly scheduled meeting following the declaration of the emergency to which the contract relates. Any contract for work, facilities or improvements with a value of more than $500,000 shall be subject to ratification by the Board at its first regularly scheduled meeting following the declaration of the emergency to which the contract relates.

2. The General Manager shall report to the Board not later than 48 hours after the emergency action or at the next regularly scheduled meeting, whichever is earlier. The report shall include the details of the emergency and reasons justifying the actions taken, and provide an accounting of the funds expended or yet to be expended in connection with the emergency.

3. If the emergency action continues for seven days and a regularly scheduled meeting will not occur within 14 days from the day the emergency action was taken, the General Manager shall request that the Board review the emergency action and determine by formal action if the need to take emergency action continues.

4. At each regularly scheduled meeting following the declaration of an emergency the Board may, by formal action and pursuant to a vote as required by Section 22050 of the Public Contract Code, determine if there is a need to continue the emergency action. If the Board does not determine that the emergency continues, the power to operate under emergency conditions will terminate and any new work, goods or services not yet procured shall be contracted or acquired in accordance with applicable provisions of this Code.

2.02 ORDER OF SUCCESSION

When the General Manager is going to be absent from the District, the General Manager is authorized to designate an Asst. General Manager to act on his behalf and said person shall have the same authority as the General Manager. Any long-term vacancies (over 30 days) shall be filled by vote of the majority of the Board.

CHAPTER 2 ADMINISTRATION OF THE DISTRICT

SECTION 2 MANAGEMENT OF THE DISTRICT

2.01 AUTHORITY OF THE GENERAL MANAGER

Pursuant to Sections 71362 and 71363 of the California Water Code, and other applicable laws of the State of California, the General Manager shall, subject to the approval and direction of the Board of Directors, operate and manage the affairs of the District. The General Manager shall have the following specifically enumerated powers and authority:

A. To control the administration, maintenance, operation and construction of the water and sewer systems and facilities of the District in an efficient manner.

B. To employ and discharge all employees and assistants, other than those referred to in Section 71340 of the California Water Code, and to prescribe their duties and promulgate specific rules and regulations for such employees and assistants.

C. To promulgate policies and procedures necessary to enhance the security of the District and increase the transparency of District operations, including provisions for the disclosure of conflicts of interest by employees.

D. To establish the terms and conditions for collection of receivables, thereby facilitating the efficient administration of the District's receivables. The General Manager or designee is given this authority as well as the authority to waive, adjust, or reduce any receivable for amounts up to $10,000.

E. To execute agreements, contracts, other documents, or commitments on behalf of the District where the amount involved does not exceed $50,000, provided that Public Works Contracts shall be awarded in compliance with applicable laws.

F. To approve change orders to agreements, contracts, or other commitments on behalf of the District. If the underlying contract is awarded by the General Manager pursuant to paragraph 2.01-E above, the cumulative value of the approved change orders and the underlying agreement, contract, or commitment shall not exceed the General Manager's signatory authority established above. If the underlying contract is awarded by the Board, the General Manager may approve change orders thereto in an aggregate amount not exceeding the General Manager's signatory authority established above.

G. To approve plans, specifications, maps and agreements, and any other documents involving land development projects within the District.

H. To authorize the use of District Real Property by third parties if all the following conditions are met: (a) the consideration is less than the General Manager's authority; and (b) the proposed use consists of an easement, license, access permit or other use of a portion of the District Real Property that will not interfere with the existing or anticipated uses of the District Real Property for District purposes; and (c) either (i) the term of the proposed use is 10 years or less, or (ii) the entity proposing to use the District Real Property is a regulated utility, governmental entity or not-for profit organization. All uses of District Real Property not contemplated herein or specifically authorized in other sections of this Code of Ordinance shall be presented to the Board of Directors for consideration.

1. The General Manager may establish terms and conditions for the use of and access to District Real Property contemplated herein, including administrative charges.

2. The use of any District Real Property shall require consideration satisfactory to the General Manager, which may be monetary compensation in an amount equal to the fair market value of the proposed use plus an administrative charge or may be in the form of a real property interest or other equivalent compensation or use.

3. "District real property" means and includes real property and interests thereon, such as fee interests, easements, licenses and other such interests acquired for various District purposes including but not limited to the construction, operation, access or maintenance of pipelines or other facilities necessary or convenient to the full exercise of the District's powers.

I. To declare an emergency and, in such event, to have the additional powers specified in the District's emergency management plan, referred to as the National Incident Management System (NIMS), and below, pursuant to California Contract Code Section 22050. An emergency is a sudden, unexpected occurrence that poses a clear and imminent danger, requiring immediate action to prevent and mitigate the loss or impairment of life, health, property, or essential public services.

1. In a declared emergency, the General Manager may direct employees, take action to continue or restore service capability, and execute any contracts for necessary equipment, services, or supplies directly related and required by the emergency. Notwithstanding the limits imposed in the prior paragraphs of this Section 2.01, or by any other policy or guideline of the District, in an emergency, the General Manager may award and execute contracts for goods, services, work,

facility or improvement, without bidding and without regard to said limits, provided that the goods, services, work, facilities or improvements acquired or contracted for are of an urgent nature, directly and immediately required by the emergency. Any contract for goods or services with a value of more than $250,000 shall be subject to ratification by the Board at its first regularly scheduled meeting following the declaration of the emergency to which the contract relates. Any contract for work, facilities or improvements with a value of more than $500,000 shall be subject to ratification by the Board at its first regularly scheduled meeting following the declaration of the emergency to which the contract relates.

2. The General Manager shall report to the Board not later than 48 hours after the emergency action or at the next regularly scheduled meeting, whichever is earlier. The report shall include the details of the emergency and reasons justifying the actions taken, and provide an accounting of the funds expended or yet to be expended in connection with the emergency.

3. If the emergency action continues for seven days and a regularly scheduled meeting will not occur within 14 days from the day the emergency action was taken, the General Manager shall request that the Board review the emergency action and determine by formal action if the need to take emergency action continues.

4. At each regularly scheduled meeting following the declaration of an emergency the Board may, by formal action and pursuant to a vote as required by Section 22050 of the Public Contract Code, determine if there is a need to continue the emergency action. If the Board does not determine that the emergency continues, the power to operate under emergency conditions will terminate and any new work, goods or services not yet procured shall be contracted or acquired in accordance with applicable provisions of this Code.

2.02 ORDER OF SUCCESSION

When the General Manager is going to be absent from the District, the General Manager is authorized to designate an Asst. General Manager to act on his behalf and said person shall have the same authority as the General Manager. Any long-term vacancies (over 30 days) shall be filled by vote of the majority of the Board.

STAFF REPORT

TYPE MEETING:	Regular Board	MEETING DATE:	November 7, 2012
		PROJECT:	DIV. NO. All
SUBMITTED BY:	Kevin Koeppen, Finance Manager		
APPROVED BY:	☒ Joseph R. Beachem, Chief Financial Officer ☒ German Alvarez, Assistant General Manager ☒ Mark Watton, General Manager		
SUBJECT:	Approve the District's Audited Financial Statements for the Fiscal Year Ended June 30, 2012		

GENERAL MANAGER'S RECOMMENDATION:

That the Board approve the District's Audited Financial Statements (Attachment B), including the Independent Auditors' unqualified opinion, for the fiscal year ended June 30, 2012.

COMMITTEE ACTION:

See Attachment A.

PURPOSE:

To inform the Board of the significant financial events which occurred during the fiscal year ended June 30, 2012 as reflected in the audited financial statements.

ANALYSIS:

Diehl, Evans & Company, LLP, performed the audit and found that, in all material respects, the financial statements correctly represent

the financial position of the District. They found no material errors in the financial records or statements and had no comments concerning internal controls, which is presented in their "Management Letter" (Attachment C). A few financial statement adjustments were made during the audit and presented in their "Audit Committee Letter" (Attachment D).

Total Assets:

Total assets decreased by $6.3 million or 1.05% during Fiscal Year 2012, to $592.3 million. Below is a summary of the decrease in total assets.

- $3.2 million Payment of long-term debt
- $1.0 million Reduction in grant funds received
- $1.4 million Write-off of CIP expenses consisting primary of:
    - $737,000 Dorchester demolition
    - $251,000 24" Sweetwater Perdue pipeline project
    - $141,000 Funding conversion of Potable to recycled meters
- $0.7 million All other items

Total Liabilities & Net Assets:

Total liabilities decreased by approximately $3.1 million or 2.22% from the previous fiscal year, to $135.9 million. This is attributable to a decrease in long-term debt of $3.2 million.

The decrease in total assets of $6.3 million, along with the decrease in total liabilities of $3.1 million, yields a decrease in net assets (equity) of $3.2 million or 0.70%, to $456.4 million.

Capital Contributions:

Capital contributions totaled $6.8 million during Fiscal Year 2012, a decrease of $1.0 million or 13.22% from Fiscal Year 2011 contributions. This decrease is mainly due to the District receiving more federal grant monies than expected in the prior year, as a result of last minute availability of funds from the federal budget.

Results of Operations:

Operating revenues increased $5.2 million or 8.22%, mainly as a result of the overall increase in water rates from the prior fiscal year.

While cost of water sales increased $4.1 million or 9.70% due to the increase in CWA water costs, cost savings achieved in other areas

were sufficient to keep total operating expenses from rising significantly compared to the prior fiscal year.

Non-Operating Revenues & Expenses:

Non-operating revenues increased $0.4 million or 4.36%, to $9.1 million for 2012. While there was a decrease in investment income of almost $400,000 due to a continuing drop in rates of investment securities, this was offset by income received from the federal subsidy of interest expenses related to the 2010 Water Revenue Bonds.

Additional Audit Correspondence:

As a part of completing the audit engagement, the audit firm also provides the following letters summarizing their observations and conclusions concerning the District's overall financial processes:

- Management Letter: The auditors did not identify any specific deficiencies in accounting procedure internal controls that they considered to be material weaknesses. See Attachment C.

- Audit Committee Letter: This letter describes overall aspects of the audit, to include audit principles, performance, dealings with management, and significant findings or issues.

  The auditors proposed three journal entry adjustments during the audit to ensure the financial statements were in conformity with all generally accepted accounting principle (GAAP) guidelines, all of which were completed by management and incorporated in the final account balances at June 30, 2012.

  There were no disagreements with management concerning financial accounting, reporting, or auditing matters, and there were no significant difficulties in dealing with management in performing the audit. See Attachment D.

- Report on Applying Agreed-Upon Procedures: A review of the District's investment portfolio at year end, and a sample of specific investment transactions completed throughout the fiscal year, disclosed no exceptions to compliance with the District's Investment Policy. See Attachment E.

FISCAL IMPACT:

None.

STRATEGIC GOAL:

The District ensures its continued financial health through long-term financial planning, formalized financial policies, enhanced budget controls, fair pricing, debt planning, and improved financial reporting.

LEGAL IMPACT:

None.

Attachments:

A) Committee Action Form
B) Audited Annual Financial Statements
C) Management Letter
D) Audit Committee Letter
E) Report on Applying Agreed-Upon Procedures

ATTACHMENT A

SUBJECT/PROJECT:	Approve the District's Audited Financial Statements for the Fiscal Year Ended June 30, 2012

COMMITTEE ACTION:

The Finance, Administration, and Communications Committee recommend that the Board accept the District's audited financial statements, including the Independent Auditor's unqualified opinion, for the Fiscal Year Ended June 30, 2012.

NOTE:

The "Committee Action" is written in anticipation of the Committee moving the item forward for board approval. This report will be sent to the Board as a committee approved item, or modified to reflect any discussion or changes as directed from the committee prior to presentation to the full board.

Attachment B

OTAY WATER DISTRICT

FINANCIAL STATEMENTS

WITH REPORT ON AUDIT BY INDEPENDENT CERTIFIED PUBLIC ACCOUNTANTS

JUNE 30, 2012 AND 2011

TABLE OF CONTENTS

JUNE 30, 2012 and 2011

	Page Number
Independent Auditors' Report	1 - 2
Management's Discussion and Analysis (Required Supplementary Information)	3 - 7
Basic Financial Statements:	
Statements of Net Assets	8 - 9
Statements of Revenues, Expenses and Changes in Net Assets	10
Statements of Cash Flows	11 - 12
Notes to Financial Statements	13 – 37
Required Supplementary Information:	
Schedule of Funding Progress for PERS	38
Schedule of Funding Progress for DPHP	38

INDEPENDENT AUDITORS' REPORT

Board of Directors
Otay Water District
Spring Valley, California

We have audited the accompanying basic financial statements of Otay Water District as of and for the years ended June 30, 2012 and 2011, as listed in the table of contents. These basic financial statements are the responsibility of the Otay Water District's management. Our responsibility is to express opinions on these financial statements based on our audits.

We conducted our audits in accordance with auditing standards generally accepted in the United States of America, the State Controller's Minimum Audit Requirements for California Special Districts, and the standards applicable to financial audits contained in Government Auditing Standards issued by the Comptroller General of the United States. Those standards require that we plan and perform the audits to obtain reasonable assurance about whether the financial statements are free of material misstatement. An audit includes consideration of internal control over financial reporting as a basis for designing audit procedures that are appropriate in the circumstances, but not for the purpose of expressing an opinion on the effectiveness of the District's internal control over financial reporting. Accordingly, we express no such opinion. An audit includes examining, on a test basis, evidence supporting the amounts and disclosures in the financial statements. An audit also includes assessing the accounting principles used and significant estimates made by management, as well as evaluating the overall financial statement presentation. We believe that our audits provide a reasonable basis for our opinions.

In our opinion, the basic financial statements referred to above present fairly, in all material respects, the financial position of the Otay Water District as of June 30, 2012 and 2011, and the respective changes in financial position and cash flows for the years then ended in conformity with accounting principles generally accepted in the United States of America.

In accordance with Government Auditing Standards, we have also issued our report dated October 15, 2012 on our consideration of the District's internal control over financial reporting and our tests of its compliance with certain provisions of laws, regulations, contracts, grant agreements and other matters. The purpose of that report is to describe the scope of our testing of internal control over financial reporting and compliance and the results of that testing, and not to provide an opinion on the internal control over financial reporting or on compliance. That report is an integral part of an audit performed in accordance with Government Auditing Standards and should be considered in assessing the results of our audit.

2965 Roosevelt Street, Carlsbad, CA 92008-2389 • Tel: 760.729.2343 • Fax: 760.729.2234

Offices located in Orange and San Diego Counties

Accounting principles generally accepted in the United States of America require that the management's discussion and analysis, PERS Defined Benefit Pension Plan – schedule of funding progress, and other post-employment benefit plan – schedule of funding progress, as identified in the accompanying table of contents be presented to supplement the basic financial statements. Such information, although not a part of the basic financial statements, is required by the Governmental Accounting Standards Board, who considers it to be an essential part of financial reporting for placing the basic financial statements in an appropriate operational, economic, or historical context. We have applied certain limited procedures to the required supplementary information in accordance with auditing standards generally accepted in the United States of America, which consisted of inquiries of management about the methods of preparing the information and comparing the information for consistency with management's responses to our inquiries, the basic financial statements, and other knowledge we obtained during our audit of the basic financial statements. We do not express an opinion or provide any assurance on the information because the limited procedures do not provide us with sufficient evidence to express an opinion or provide any assurance.

White Nelson Diehl Evans LLP

October 15, 2012
Carlsbad, California

Management's Discussion and Analysis

As management of the Otay Water District (the "District"), we offer readers of the District's financial statements this narrative overview and analysis of the District's financial performance during the fiscal year ending June 30, 2012. Please read it in conjunction with the District's financial statements that follow Management's Discussion and Analysis. All amounts, unless otherwise indicated, are expressed in millions of dollars.

Financial Highlights

- The assets of the District exceeded its liabilities at the close of the most recent fiscal year by $456.4 million *(net assets).* Of this amount, $70.0 million *(unrestricted net assets)* may be used to meet the District's ongoing obligations to citizens and creditors.

- Total assets decreased by $6.3 million or 1.05% during Fiscal Year 2012, to $592.3 million, due primarily to the write-off of CIP projects that were no longer viable as a part of the District's long range plans for growth and improvements to infrastructure. Other significant factors were the annual payment of long-term debt and a reduction in grant funds received.

Overview of the Financial Statements

This discussion and analysis is intended to serve as an introduction to the District's basic financial statements, which are comprised of the following: 1) Statement of Net Assets, 2) Statement of Revenues, Expenses and Changes in Net Assets, 3) Statement of Cash Flows, and 4) Notes to the Financial Statements. This report also contains other supplementary information in addition to the basic financial statements.

The S*tatement of Net Assets* presents information on all of the District's assets and liabilities, with the difference between the two reported as *net assets*. Over time, increases or decreases in net assets may serve as a useful indicator of whether the financial position of the District is improving or weakening.

The S*tatement of Revenues, Expenses and Changes in Net Assets* presents information showing how the District's net assets changed during the most recent fiscal year. All changes in net assets are reported as soon as the underlying event giving rise to the change occurs, *regardless of the timing of related cash flows*. Thus, revenues and expenses are reported in this statement for some items that will only result in cash flows in future fiscal periods (e.g., uncollected taxes and earned but unused vacation leave).

The *Statement of Cash Flows* presents information on cash receipts and payments for the fiscal year.

The *Notes to the Financial Statements* provide additional information that is essential to a full understanding of the data supplied in each of the specific financial statements listed above.

In addition to the basic financial statements and accompanying notes, this report also presents certain *required supplementary information* concerning the District's progress in funding its obligation to provide pension benefits to its employees.

Financial Analysis

As noted, net assets may serve over time as a useful indicator of an entity's financial position. In the case of the District, assets exceeded liabilities by $456.4 million at the close of the most recent fiscal year.

By far the largest portion of the District's net assets, $381.7 million (84%), reflects its investment in capital assets, less any remaining outstanding debt used to acquire those assets. The District uses these capital assets to provide services to citizens; consequently, these assets are not available for future spending. Although the District's investment in its capital assets is reported effectively as a resource, however, it should be noted that the resources needed to repay the debt must be provided from other sources, since the capital assets themselves cannot be used to liquidate these liabilities.

Statements of Net Assets
(In Millions of Dollars)

	2012	2011	2010
Assets			
Current and Other Assets	$ 111.5	$ 124.1	$ 135.3
Capital Assets	480.8	474.4	469.2
Total Assets	592.3	598.5	604.5
Liabilities			
Long-Term Debt Outstanding	111.2	114.5	117.7
Other Liabilities	24.7	24.4	25.5
Total Liabilities	135.9	138.9	143.2
Net Assets			
Invested in Capital Assets Net of Related Debt	381.7	377.7	375.9
Restricted for Debt Service	4.7	4.9	5.2
Unrestricted	70.0	77.0	80.2
Total Net Assets	$ 456.4	$ 459.6	$ 461.3

While the District's operations and population continue to grow, albeit at slower rates than in prior years, the pattern of reduced growth of the District's Net Assets is indicative of the reduction in new development projects within the District. This reduction is a result of the ongoing national housing slump and financial crisis.

In FY-2012 the District continued its use of the $51.2 million of proceeds from the issuance of its 2010 Water Revenue Bonds program (See Note 5 in the Notes to Financial Statements) for its CIP program (See Note 3 in the Notes to Financial Statements), as seen by the decrease in Current and Other Assets of $12.6 million, which was partially offset by a corresponding increase in Capital Assets of $6.4 million. The District also saw a decrease in Long-Term Debt of $3.3 million due to the annual payments of long-term debt.

In response to the prolonged business slowdown, during FY-2011 the District performed a review of Fixed Assets throughout the system and wrote off $2.9 million of fully depreciated Property, Plant & Equipment that was no longer serviceable or functioning efficiently. Additionally, the Engineering Department completed an analysis of several Construction-in-Progress projects that were still in the developmental stages and determined they were no longer viable as a part of the District's long range plan for growth and improvements to infrastructure. This resulted in FY-2011 expenses of $1.2 million and FY-2010 expenses of $1.3 million.

For the entire financial reporting period, Fiscal Years 2012 and 2011, total Net Assets decreased approximately $3.2 million for FY-2012, to $456.4 million, as compared to FY-2011 when Net Assets decreased by $1.7 million. At the end of FY-2012 the District is able to report positive balances in all categories of net assets. This situation also held true for the prior two fiscal years.

Statements of Revenues, Expenses, and Changes in Net Assets
(In Millions of Dollars)

	2012	2011	2010
Water Sales	$ 63.8	$ 58.3	$ 56.3
Wastewater Revenue	2.4	2.4	2.3
Connection and Other Fees	2.2	2.5	2.1
Non-operating Revenues	9.1	8.8	8.9
Total Revenues	77.5	72.0	69.6
Depreciation Expense	15.2	13.9	13.3
Other Operating Expense	66.5	63.4	59.8
Non-operating Expense	5.8	4.3	3.0
Total Expenses	87.5	81.6	76.1
Loss Before Capital Contributions	(10.0)	(9.6)	(6.5)
Capital Contributions	6.8	7.9	8.8
Change in Net Assets	(3.2)	(1.7)	2.3
Prior Period Adjustment			(1.3)
Beginning Net Assets	459.6	461.3	460.3
Ending Net Assets	$ 456.4	$ 459.6	$ 461.3

Water Sales increased by $2.0 million in FY-2011 and $5.5 million in FY-2012, mainly due to rate increases in both years. The slowdown in growth throughout the District was also reflected in the modest increase in Connection and Other Fees of $0.4 million in FY-2011, followed by a slight decrease of $0.3 million in FY-2012.

Other Operating Expense has increased predominantly due to the increase in Cost of Water Sales, from a combination of the increased price-per-acre-foot of water obtained from Los Angeles Metropolitan Water District of 7.50%, and 9.97% from San Diego County Water Authority, brought on by the high cost of supply programs as well as higher energy and operating costs.

The slowdown in the economy appears to have leveled off. However, due to the nationwide housing mortgage crisis throughout the last several years, developers have either slowed-down or totally stopped work on many projects until economic conditions improve and the demand for growth returns. This has resulted in Capital Contributions remaining low over the last 3-years, compared to the extended growth of the previous 10-years. While this slowdown now appears to have stabilized, the District was aided in its Capital Contributions through the receipt of additional federal grant monies of $1.6 million in FY-2011, and $935,000 in FY-2012.

Non-operating Revenues

Non-operating Revenues by Major Source
(In Millions of Dollars)

	2012	2011	2010
Taxes and assessments	$ 3.5	$ 3.9	$ 4.0
Rents and leases	1.2	1.2	1.1
Other Non-operating Revenue	4.4	3.7	3.8
Total Revenues	9.1	8.8	8.9

The District's non-operating revenues decreased by $0.1 million in FY-2011 and grew $0.3 million in FY-2012. The increase in FY-2012 was primarily a result of increased miscellaneous income offset by decreases in investment income as well as taxes and assessments.

Capital Assets and Debt Administration

The District's capital assets as of June 30, 2012, totaled $480.8 million (net of accumulated depreciation). Included in this amount is land. The total increase in the District's capital assets was 1.1% for FY-2011 and 1.4% in FY-2012.

Capital Assets
(In Millions of Dollars)

	2012	2011	2010
Land	$ 13.7	$ 13.6	$ 13.6
Construction in Progress	17.5	17.9	35.2
Water System	452.1	441.9	409.5
Recycled Water System	108.0	98.3	97.7
Sewer System	37.8	37.7	37.4
Field Equipment	8.6	9.8	9.5
Buildings	18.6	18.5	18.5
Transportation Equipment	3.2	3.2	3.3
Communication Equipment	2.5	2.4	1.3
Office Equipment	17.2	17.3	18.4
	679.2	660.6	644.4
Less Accumulated Depreciation	(198.4)	(186.2)	(175.2)
Net Capital Assets	$ 480.8	$ 474.4	$ 469.2

As indicated by figures in the table above, the majority of capital assets added during both fiscal years were related to the potable and recycled water systems. In addition, the majority of the cost of construction-in-progress is also related to these water systems. Additional information on the District's capital assets can be found in Note 3 of the Notes to Financial Statements.

At June 30, 2012, the District had $111.2 million in outstanding debt (net of $3.3 million of maturities occurring in fiscal year 2013), which consisted of the following:

General Obligation Bonds	$	5.8
Certificates of Participation		55.9
Revenue Bonds		49.5
Total Long-Term Debt	$	111.2

Additional information on the District's long-term debt can be found in Note 5 of the Notes to Financial Statements.

Fiscal Year 2012-2013 Budget

Economic Factors

Growth in the San Diego area has declined over the last 4 years, but is slowly improving. This modest shift is also being reflected in the demand for housing. Although San Diego received less than normal rainfall in Fiscal Year 2012, the District is expecting that San Diego's rainfall will return to its average pattern and volume in the coming years. Water sales volumes are expected to increase slightly as the economy is slowly improving, but will be partially offset by expanded efforts to promote water conservation. The coming years will continue to pose challenges for those in California's water community. It is uncertain if the challenges facing the Sacramento-San Joaquin Bay Delta, the source of 30% of Southern California's water supply, will be addressed. In addition, weather and rainfall always bring a level of uncertainty to the delivery of water to customers in the arid southwestern states. The combination of these factors add to the cost of providing a stable supply of water as water providers look to new and more costly sources of water.

The District currently provides water service to about 73% of its projected ultimate population, serving approximately 208,000 people. Long-term, this percentage should continue to increase as the District's service area continues to develop and grow. Ultimately, the District is projected to serve approximately 285,000 people, with an average daily demand of 46 million gallons per day (MGD). Currently, the District services the needs of this growing population by purchasing water from CWA, who in turn purchases its water from MWD and the Imperial Irrigation District (IID). Otay takes delivery of the water through several connections of large diameter pipelines owned and operated by CWA. The District currently receives treated water from CWA and the Helix Water District (HWD), by contract with CWA. In addition, the District has an emergency agreement with the City of San Diego to purchase water in the case of a shutdown of the main treated water source. The City of San Diego also has a long-term contract with the District to provide recycled water for landscape and irrigation usage. Through innovative agreements like this, benefits can be achieved by both parties by using excess capacity of another agency, and diversifying local supply, thereby increasing reliability.

Financial

The District is projected to deliver approximately 28,925 acre-feet of potable water to 48,860 potable customer accounts during Fiscal Year 2012-2013. Management feels that these projections are realistic after accounting for low growth, supply changes, and a focus on conservation. Current economic conditions throughout America have created an unprecedented uncertainty for business and economic projections in the current fiscal year. The nationwide housing mortgage crisis has leveled off, but continues to result in foreclosures within the District. Additionally, the crisis in the banking and financial industry has had a ripple effect resulting in continued levels of high unemployment. One of the subsequent results of these two broad events is the relocation of many homeowners and renters into new housing arrangements throughout San Diego County. Even with the various challenges, people's need for water remains an underlying constant. Staff continues working diligently on developing new water supplies as they work through the financial impacts of conservation and the modest economic turnaround.

Management is unaware of any other conditions that could have a significant impact on the District's current financial position, net assets, or operating results.

Contacting the District's Financial Management

This financial report is designed to provide a general overview of the Otay Water District's finances for the Board of Directors, taxpayers, creditors, and other interested parties. Questions concerning any of the information provided in the report or requests for additional information should be addressed to the District's Finance Department, 2554 Sweetwater Springs Blvd., Spring Valley, CA 91978-2004.

STATEMENTS OF NET ASSETS
JUNE 30, 2012 AND 2011

	2012	2011
ASSETS		
Current Assets:		
Cash and cash equivalents (Notes 1 and 2)	$ 31,075,455	$ 48,563,129
Restricted cash and cash equivalents (Notes 1 and 2)	4,057,726	5,239,430
Investments (Note 2)	37,069,853	28,691,752
Restricted investments (Notes 1 and 2)	16,124,042	20,622,679
Accounts receivable, net	10,575,970	9,235,138
Accrued interest receivable	106,375	180,113
Taxes and availability charges receivable, net	481,955	454,948
Restricted taxes and availability charges receivable, net	57,313	75,588
Inventories	789,769	835,321
Prepaid expenses and other current assets	1,226,703	1,189,206
Total Current Assets	101,565,161	115,087,304
Noncurrent Assets:		
Net OPEB asset (Note 8)	8,321,902	7,416,346
Deferred bond issuance costs (Note 4)	1,532,857	1,618,069
Capital Assets (Note 3):		
Land	13,703,463	13,636,663
Construction in progress	17,452,274	17,909,282
Capital assets, net of depreciation	449,674,352	442,881,020
Total capital assets, net of depreciaton	480,830,089	474,426,965
Total Noncurrent Assets	490,684,848	483,461,380
Total Assets	592,250,009	598,548,684

(Continued)

See accompanying independent auditors' report and notes to financial statements.

STATEMENTS OF NET ASSETS (CONTINUED)
JUNE 30, 2012 AND 2011

	2012	2011
LIABILITIES		
Current Liabilities:		
Current maturities of long-term debt (Note 5)	3,320,000	3,146,010
Accounts payable	10,478,366	13,000,560
Accrued payroll liabilities	2,591,272	2,932,277
Other accrued liabilities	3,932,442	739,868
Customer deposits	1,863,992	2,105,187
Accrued interest	1,639,681	1,656,826
Liabilities Payable From Restricted Assets:		
Restricted accrued interest	81,354	86,405
Total Current Liabilities	23,907,107	23,667,133
Noncurrent Liabilities:		
Long-term debt (Note 5):		
General obligation bonds	5,819,027	6,298,577
Certificates of participation	55,886,449	57,865,531
Revenue bonds	49,521,421	50,395,822
Other noncurrent liabilities	721,626	715,037
Total Noncurrent Liabilities	111,948,523	115,274,967
Total Liabilities	135,855,630	138,942,100
NET ASSETS		
Invested in capital assets, net of related debt	381,725,015	377,656,762
Restricted for debt service	4,715,904	4,915,555
Unrestricted	69,953,460	77,034,267
Total Net Assets	$ 456,394,379	$ 459,606,584

See accompanying independent auditors' report and notes to financial statements.

Statements Of Revenues, Expenses and Changes in Net Assets

For The Years Ended June 30, 2012 and 2011

	2012	2011
OPERATING REVENUES		
Water sales	$ 63,830,272	$ 58,293,184
Wastewater revenue	2,400,313	2,396,385
Connection and other fees	2,169,764	2,514,647
Total Operating Revenues	68,400,349	63,204,216
OPERATING EXPENSES		
Cost of water sales	46,106,403	42,029,819
Wastewater	2,547,929	2,592,823
Administrative and general	17,926,430	18,763,380
Depreciation	15,214,704	13,880,206
Total Operating Expenses	81,795,466	77,266,228
Operating Income (Loss)	(13,395,117)	(14,062,012)
NONOPERATING REVENUES (EXPENSES)		
Investment income	436,596	854,440
Taxes and assessments	3,502,155	3,895,938
Availability charges	696,863	653,012
Gain (loss) on sale of capital assets	(278,540)	55,300
Miscellaneous revenues	4,788,711	3,304,963
Donations	(121,617)	(120,648)
Interest expense	(3,899,927)	(3,877,531)
Miscellaneous expenses	(1,767,226)	(312,649)
Total Nonoperating Revenues (Expenses)	3,357,015	4,452,825
Income (Loss) Before Capital Contributions	(10,038,102)	(9,609,187)
Capital Contributions	6,825,897	7,866,190
Changes in Net Assets	(3,212,205)	(1,742,997)
Total Net Assets, Beginning	459,606,584	461,349,581
Total Net Assets, Ending	$ 456,394,379	$ 459,606,584

See accompanying independent auditors' report and notes to financial statements.

STATEMENTS OF CASH FLOWS

FOR THE YEARS ENDED JUNE 30, 2012 AND 2011

	2012	2011
CASH FLOWS FROM OPERATING ACTIVITIES		
Receipts from customers	$ 64,648,558	$ 60,372,625
Receipts from connections and other fees	2,169,764	2,514,647
Other receipts	3,566,651	2,119,390
Payments to suppliers	(46,620,831)	(47,028,888)
Payments to employees	(20,521,468)	(19,439,549)
Other payments	(1,724,744)	(269,198)
Net Cash Provided (Used) by Operating Activities	1,517,930	(1,730,973)
CASH FLOWS FROM NONCAPITAL AND RELATED FINANCING ACTIVITIES		
Receipts from taxes and assessments	3,493,423	3,918,750
Receipts from property rents and leases	1,222,060	1,185,573
Net Cash Provided (Used) by Noncapital and Related Financing Activities	4,715,483	5,104,323
CASH FLOWS FROM CAPITAL AND RELATED FINANCING ACTIVITIES		
Proceeds from capital contributions	3,363,090	7,386,617
Proceeds from sale of capital assets	28,128	81,220
Proceeds from debt related taxes and assessments	696,863	653,012
Principal payments on long-term debt	(3,146,010)	(2,668,734)
Interest payments and fees	(5,199,488)	(4,696,309)
Acquisition and construction of capital assets	(17,276,246)	(17,474,142)
Net Cash Provided (Used) by Capital and Related Financing Activities	(21,533,663)	(16,718,336)
CASH FLOWS FROM INVESTING ACTIVITIES		
Interest received on investments	580,872	945,888
Proceeds from sale and maturities of investments	108,410,000	114,918,280
Purchase of investments	(112,360,000)	(110,029,066)
Net Cash Provided (Used) by Investing Activities	(3,369,128)	5,835,102
Net Increase (Decrease) in Cash and cash equivalents	(18,669,378)	(7,509,884)
Cash and cash equivalents, Beginning	53,802,559	61,312,443
Cash and cash equivalents, Ending	$ 35,133,181	$ 53,802,559

(Continued)

See accompanying independent auditors' report and notes to financial statements.

STATEMENTS OF CASH FLOWS (CONTINUED)

FOR THE YEARS ENDED JUNE 30, 2012 AND 2011

	2012	2011
Reconciliation of operating income (loss) to net cash flows provided (used) by operating activities:		
Operating income (loss)	$ (13,395,117)	$ (14,062,012)
Adjustments to reconcile operating income to net cash provided (used) by operating activities:		
Depreciation	15,214,704	13,880,206
Miscellaneous revenues	3,566,651	2,119,390
Miscellaneous expenses	(1,724,744)	(269,198)
(Increase) decrease in accounts receivable	(1,340,832)	(275,771)
(Increase) decrease in inventory	45,552	118,686
(Increase) decrease in net OPEB asset	(905,556)	(632,961)
(Increase) decrease in prepaid expenses and other current assets	(37,497)	(562,785)
Increase (decrease) in accounts payable	(2,522,194)	(2,326,805)
Increase (decrease) in accrued payroll and related expenses	(341,005)	188,869
Increase (decrease) in other accrued liabilities	3,192,574	101,853
Increase (decrease) in customer deposits	(241,195)	(41,173)
Increase (decrease) in prepaid capacity fees	6,589	30,728
Net Cash Provided (Used) By Operating Activities	$ 1,517,930	$ (1,730,973)
Schedule of Cash and Cash Equivalents:		
Current assets:		
Cash and cash equivalents	$ 31,075,455	$ 48,563,129
Restricted cash and cash equivalents	4,057,726	5,239,430
Total Cash and Cash Equivalents	$ 35,133,181	$ 53,802,559
Supplemental Disclosures:		
Non-cash Investing and Financing Activities Consisted of the Following:		
Contributed Capital for Water and Sewer System	$ 3,462,807	$ 479,573
Change in Fair Value of Investments and Recognized Gains/Losses	(127,662)	(73,092)
Amortization Related to Long-Term Debt	164,101	164,101

See accompanying independent auditors' report and notes to financial statements.

NOTE	DESCRIPTION	PAGE
1	Reporting Entity and Summary of Significant Accounting Policies..…	13 – 15
2	Cash and Investments……..……...	16 – 20
3	Capital Assets……..……...	21 – 22
4	Other Noncurrent Assets……..	22
5	Long-Term Debt…….……	23 – 27
6	Net Assets……..	27
7	Defined Benefit Pension Plan…….	27 – 28
8	Other Post Employment Benefits……..…….....	29 – 31
9	Water Conservation Authority……...	31
10	Commitments and Contingencies……..	32
11	Risk Management……..	32 – 33
12	Interest Expense…….....	33
13	Segment information…….....	34 – 36

Required Supplementary Information:

1	Schedule of Funding Progress for PERS……	38
2	Schedule of Funding Progress for DPHP……...	38

1) REPORTING ENTITY AND SUMMARY OF SIGNIFICANT ACCOUNTING POLICIES

A) Reporting Entity

Otay Water District (the "District") is a public entity established in 1956 pursuant to the Municipal Water District Law of 1911 (Section 711 et. Seq. of the California Water Code) for the purpose of providing water and sewer services to the properties in the District. The District is governed by a Board of Directors consisting of five directors elected by geographical divisions based on District population for a four-year alternating term.

B) Measurement Focus, Basis of Accounting and Financial Statement Presentation

Measurement focus is a term used to describe "which" transactions are recorded within the various financial statements. Basis of accounting refers to "when" transactions are recorded regardless of the measurement focus applied. The accompanying financial statements are reported using the economic resources measurement focus, and the accrual basis of accounting. Under the economic measurement focus all assets and liabilities (whether current or noncurrent) associated with these activities are included on the Statement of Net Assets. The Statement of Revenues, Expenses and Changes in Net Assets present increases (revenues) and decreases (expenses) in total net assets. Under the accrual basis of accounting, revenues are recorded when earned and expenses are recorded when a liability is incurred, regardless of the timing of related cash flows.

The District reports its activities as an enterprise fund, which is used to account for operations that are financed and operated in a manner similar to a private business enterprise, where the intent of the District is that the costs (including depreciation) of providing goods or services to the general public on a continuing basis be financed or recovered primarily through user charges.

The basic financial statements of the Otay Water District have been prepared in conformity with accounting principles generally accepted in the United States of America. The Governmental Accounting Standards Board (GASB) is the accepted standard setting body for governmental accounting financial reporting purposes.

Net assets of the District are classified into three components: (1) invested in capital assets, net of related debt, (2) restricted net assets, and (3) unrestricted net assets. These classifications are defined as follows:

Invested in Capital Assets, Net of Related Debt

This component of net assets consists of capital assets, net of accumulated depreciation and reduced by the outstanding balances of notes or borrowing that are attributable to the acquisition of the asset, construction, or improvement of those assets. If there are significant unspent related debt proceeds at year-end, the portion of the debt attributable to the unspent proceeds are not included in the calculation of invested in capital assets, net of related debt.

Restricted Net Assets

This component of net assets consists of net assets with constrained use through external constraints imposed by creditors (such as through debt covenants), grantors, contributors, or laws or regulations of other governments or constraints imposed by law through constitutional provisions or enabling legislation.

Unrestricted Net Assets

This component of net assets consists of net assets that do not meet the definition of "invested in capital assets, net of related debt" or "restricted net assets".

1) REPORTING ENTITY AND SUMMARY OF SIGNIFICANT ACCOUNTING POLICIES - Continued

B) Measurement Focus, Basis of Accounting and Financial Statement Presentation - Continued

The District distinguishes operating revenues and expenses from those revenues and expenses that are nonoperating. Operating revenues are those revenues that are generated by water sales and wastewater services while operating expenses pertain directly to the furnishing of those services. Nonoperating revenues and expenses are those revenues and expenses generated that are not directly associated with the normal business of supplying water and wastewater treatment services.

The District recognizes revenues from water sales, wastewater revenues, and meter fees as they are earned. Taxes and assessments are recognized as revenues based upon amounts reported to the District by the County of San Diego, net of allowance for delinquencies of $57,465 and $58,948 at June 30, 2012 and 2011, respectively.

Additionally, capacity fee contributions received which are related to specific operating expenses are offset against those expenses and included in Cost of Water Sales in the Statement of Revenues and Expenses and Changes in Net Assets.

When both restricted and unrestricted resources are available for use, it is the District's practice to use restricted resources first, then unrestricted resources as they are needed.

C) Statement of Cash Flows

For purposes of the Statement of Cash Flows, the District considers all highly liquid investments (including restricted assets) with a maturity period, at purchase, of three months or less to be cash equivalents.

D) Investments

The District's investments are stated at fair value, except for short-term investments, which are reported at cost, which approximates fair value. Investments in governmental investment pools are reported on the fair value per share of the pool's underlying portfolio.

E) Inventory and Prepaids

Inventory consists primarily of materials used in the construction and maintenance of the water and sewer system and is valued at weighted average cost. Both inventory and prepaids use the consumption method whereby they are reported as an asset and expensed as they are consumed.

F) Capital Assets

Capital assets are recorded at cost, where historical records are available, and at an estimated historical cost where no historical records exist. Infrastructure assets in excess of $20,000 and other capital assets in excess of $10,000 are capitalized if they have an expected useful life of two years or more. The District will also capitalize individual purchases under the capitalization threshold if they are part of a new capital program. The cost of purchased and self-constructed additions to utility plant and major replacements of property are capitalized. Costs include materials, direct labor, transportation, and such indirect items as engineering, supervision, employee fringe benefits, overhead, and interest incurred during the construction period. Repairs, maintenance, and minor replacements of property are charged to expense. Donated assets are capitalized at their approximate fair market value on the date contributed.

The District capitalizes interest on construction projects up to the point in time that the project is substantially completed. Capitalized interest for fiscal year ending June 30, 2012 of $1,185,443 is included in the cost of water system assets and is depreciated on the straight-line basis over the estimated useful lives of such assets.

1) REPORTING ENTITY AND SUMMARY OF SIGNIFICANT ACCOUNTING POLICIES - Continued

F) Capital Assets - Continued

Depreciation is calculated using the straight-line method over the following estimated useful lives:

Water System	15-70 Years
Field Equipment	2-50 Years
Buildings	30-50 Years
Communication Equipment	2-10 Years
Transportation Equipment	2-4 Years
Office Equipment	2-10 Years
Recycled Water System	50-75 Years
Sewer System	25-50 Years

G) Compensated Absences

It is the District's policy to record the cost of paid time off (vacation and sick leave) as it is earned. Paid time off is payable to employees at the time it is taken or upon termination of employment. As of June 30, 2012 and 2011, total accrued paid time off was $1,991,841 and $2,162,352, respectively.

H) Restricted Assets and Liabilities

Certain current liabilities have been classified as current liabilities payable from restricted assets as they will be funded from restricted assets.

I) Allowance for Doubtful Accounts

The District charges doubtful accounts arising from water sales receivable to bad debt expense when it is probable that the accounts will be uncollectible. Uncollectible accounts are determined by the allowance method based upon prior experience and management's assessment of the collectability of existing specific accounts. The allowance for doubtful accounts were $14,461 and $148,047 for 2012 and 2011, respectively.

J) Use of Estimates

The preparation of financial statements in conformity with generally accepted accounting principles in the United States of America requires management to make estimates and assumptions that affect the reported amounts of assets and liabilities and disclosure of contingent assets and liabilities at the date of the financial statements and the reported amounts of revenues and expenses during the reporting period. Actual results could differ from those estimates.

K) Property Taxes

Tax levies are limited to 1% of full market value (at time of purchase) which results in a tax rate of $1.00 per $100 assessed valuation, under the provisions of Proposition 13. Tax rates for voter-approved indebtedness are excluded from this limitation.

The County of San Diego (the "County") bills and collects property taxes on behalf of the District. The County's tax calendar year is July 1 to June 30. Property taxes attach as a lien on property on January 1. Taxes are levied on July 1 and are payable in two equal installments on November 1 and February 1, and become delinquent after December 10 and April 10, respectively.

L) Reclassifications

Certain reclassifications have been made to prior year amounts to conform to the current year presentation.

2) CASH AND INVESTMENTS

The primary goals of the District's Investment Policy are to assure compliance with all Federal, State, and Local laws governing the investment of funds under the control of the organization, protect the principal of investments entrusted, and generate income under the parameters of such policies.

Cash and Investments are classified in the accompanying financial statements as follows:

Statement of Net Assets:		
Current Assets	**2012**	**2011**
Cash and Cash Equivalents	$ 31,075,455	$ 48,563,129
Restricted Cash and Cash Equivalents	4,057,726	5,239,430
Investments	37,069,853	28,691,752
Restricted Investments	16,124,042	20,622,679
Total Cash and Investments	$ 88,327,076	$ 103,116,990

Cash and Investments consist of the following:

	2012	**2011**
Cash on Hand	$ 2,950	$ 2,950
Deposits with Financial Institutions	1,519,979	981,696
Investments	86,804,147	102,132,344
Total Cash and Investments	$ 88,327,076	$ 103,116,990

Investments Authorized by the California Government Code and the District's Investment Policy

The table below identifies the investment types that are authorized for the District by the California Government Code (or the District's Investment Policy, where more restrictive). The table also identifies certain provisions of the California Government Code (or the District's Investment Policy, where more restrictive) that address interest rate risk, credit risk, and concentration of credit risk. This table does not address investments of debt proceeds held by bond trustee that are governed by the provisions of debt agreements of the District, rather than the general provisions of the California Government Code or the District's Investment Policy.

Authorized Investment Type	Maximum Maturity	Maximum Percentage Of Portfolio[1]	Maximum Investment In One Issuer
U.S. Treasury Obligations	5 years	None	None
U.S. Government Sponsored Entities	5 years	None	None
Certificates of Deposit	5 years	15%	None
Corporate Medium-Term Notes	5 years	15%	None
Commercial Paper	270 days	15%	10%
Money Market Mutual Funds	N/A	15%	None
County Pooled Investment Funds	N/A	None	None
Local Agency Investment Fund (LAIF)	N/A	None	None

[1] Excluding amounts held by bond trustee that are not subject to California Government Code restrictions.

2) CASH AND INVESTMENTS - Continued

Investments Authorized by Debt Agreements

Investments of debt proceeds held by the bond trustee are governed by provisions of the debt agreements, rather than the general provisions of the California Government Code or the District's Investment Policy.

Disclosures Relating to Interest Rate Risk

Interest rate risk is the risk that changes in market interest rates will adversely affect the fair value of an investment. Generally, the longer the maturity of an investment, the greater the sensitivity of its fair value to changes in market interest rates. One of the ways that the District manages its exposure to interest rate risk is by purchasing a combination of shorter term and longer term investments and by timing cash flows from maturities so that a portion of the portfolio is maturing or coming close to maturity evenly over time, as necessary, to provide the cash flow and liquidity needed for operations.

Information about the sensitivity of the fair values of the District's investments to market interest rate fluctuations are provided by the following tables that show the distribution of the District's investments by maturity as of June 30, 2012 and 2011.

June 30, 2012

		Remaining Maturity (in Months)			
Investment Type		12 Months Or Less	13 to 24 Months	25 to 60 Months	More Than 60 Months
U.S. Government Sponsored Entities	$ 53,100,166	$ 5,744,244	$24,995,670	$22,360,252	$ -
Local Agency Investment Fund (LAIF)	11,614,981	11,614,981	-	-	-
San Diego County Pool	22,089,000	22,089,000	-	-	-
Total	$ 86,804,147	$39,448,225	$24,995,670	$22,360,252	$ -

June 30, 2011

		Remaining Maturity (in Months)			
Investment Type		12 Months Or Less	13 to 24 Months	25 to 60 Months	More Than 60 Months
U.S. Government Sponsored Entities	$ 49,263,245	$ -	$21,821,835	$27,441,411	$ -
Local Agency Investment Fund (LAIF)	35,876,620	35,876,620	-	-	-
Corporate Medium-Term Notes	-	-	-	-	-
San Diego County Pool	16,992,479	16,992,479	-	-	-
Total	$102,132,344	$52,869,099	$21,821,835	$27,441,411	$ -

2) CASH AND INVESTMENTS - Continued

Disclosures Relating to Credit Risk

Generally, credit risk is the risk that an issuer of an investment will not fulfill its obligation to the holder of the investment. This is measured by the assignment of a rating by a nationally recognized statistical rating organization. Presented below is the minimum rating required by (where applicable) the California Government Code or the District's Investment Policy, or debt agreements, and the Moody's ratings as of June 30, 2012 and 2011 for each investment type.

June 30, 2012

Investment Type		Minimum Legal Rating	Rating as of Year End		
			AAA	AA	Not Rated
U.S. Government Sponsored Entities	$ 53,100,166	N/A	$53,100,166	$ -	$ -
Local Agency Investment Fund (LAIF)	11,614,981	N/A	-	-	11,614,981
San Diego County Pool	22,089,000	N/A	-	-	22,089,000
Total	$ 86,804,147		$53,100,166	$ -	$33,703,981

June 30, 2011

Investment Type		Minimum Legal Rating	Rating as of Year End		
			AAA	AA	Not Rated
U.S. Government Sponsored Entities	$ 49,263,245	N/A	$49,263,246	$ -	$ -
Local Agency Investment Fund (LAIF)	35,876,620	N/A	-	-	35,876,620
San Diego County Pool	16,992,479	N/A	-	-	16,992,479
Total	$102,132,344		$49,263,246	$ -	$52,869,099

2) CASH AND INVESTMENTS - Continued

Concentration of Credit Risk

The investment policy of the District contains various limitations on the amounts that can be invested in any one type or group of investments and in any issuer, beyond that stipulated by the California Government Code, Sections 53600 through 53692. Investments in any one issuer (other than U.S. Treasury securities, mutual funds, and external investment pools) that represent 5% or more of total District investments as of June 30, 2012 and 2011 are as follows:

June 30, 2012

Issuer	Investment Type	Reported Amount
Federal Home Loan Bank	U.S. Government Sponsored Entities	$ 17,991,270
Federal Home Loan Mortgage Corp	U.S. Government Sponsored Entities	15,753,834
Federal National Mortgage Association	U.S. Government Sponsored Entities	14,993,400
Federal Farm Credit Banks	U.S. Government Sponsored Entities	4,361,662

June 30, 2011

Issuer	Investment Type	Reported Amount
Federal Home Loan Bank	U.S. Government Sponsored Entities	$ 17,791,131
Federal Home Loan Mortgage Corp	U.S. Government Sponsored Entities	25,827,735
Federal National Mortgage Association	U.S. Government Sponsored Entities	5,644,380

Custodial Credit Risk

Custodial credit risk for deposits is the risk that, in the event of the failure of a depository financial institution, a government will not be able to recover its deposits or will not be able to recover collateral securities that are in the possession of an outside party. The custodial credit risk for investments is the risk that, in the event of the failure of the counterparty (e.g., broker-dealer) to a transaction, a government will not be able to recover the value of its investment or collateral securities that are in the possession of another party. The California Government Code and the Entity's investment policy do not contain legal or policy requirements that would limit the exposure to custodial credit risk for deposits or investments, other than the following provision for deposits: The California Government Code requires that a financial institution secure deposits made by state or local government units by pledging securities in an undivided collateral pool held by a depository regulated under state law (unless so waived by the governmental unit). The market value of the pledged securities in the collateral pool must equal at least 110% of the total amount deposited by the public agencies. California law also allows financial institutions to secure deposits by pledging first trust deed mortgage notes having a value of 150% of the secured public deposits.

As of June 30, 2012, $1,720,135 of the District's deposits with financial institutions in excess of federal depository insurance limits were held in collateralized accounts. As of June 30, 2011, $1,308,661 of the District's deposits with financial institutions in excess of federal depository insurance limits were held in collateralized accounts.

2) CASH AND INVESTMENTS - Continued

Local Agency Investment Fund (LAIF)

The District is a voluntary participant in the Local Agency Investment Fund (LAIF) that is regulated by California Government Code Section 16429 under the oversight of the Treasurer of the State of California. The fair value of the District's investment in this pool is reported in the accompanying financial statements at amounts based upon District's pro-rata share of the fair value provided by LAIF for the entire LAIF portfolio (in relation to the amortized cost of that portfolio). The balance available for withdrawal is based on the accounting records maintained by LAIF, which are recorded on an amortized cost-basis.

San Diego County Pooled Fund

The San Diego County Pooled Investment Fund (SDCPIF) is a pooled investment fund program governed by the County of San Diego Board of Supervisors, and administered by the County of San Diego Treasurer and Tax Collector. Investments in SDCPIF are highly liquid as deposits and withdrawals can be made at anytime without penalty.

The County of San Diego's bank deposits are either Federally insured or collateralized in accordance with the California Government Code. Pool detail is included in the County of San Diego Comprehensive Annual Financial Report (CAFR). Copies of the CAFR may be obtained from the County of San Diego Auditor-Controller's Office – 1600 Pacific Coast Highway – San Diego, CA 92101.

Collateral for Deposits

All cash is entirely insured or collateralized.

Under the provisions of the California Government Code, California banks and savings and loan associations are required to secure the District's deposits by pledging government securities as collateral. The market value of the pledged securities must equal at least 110% of the District's deposits. California law also allows financial institutions to secure District deposits by pledging first trust deed mortgage notes having a value of 150% of the District's total deposits.

The District may waive the 110% collateral requirement for deposits which are insured up to $250,000 by the FDIC.

3) CAPITAL ASSETS

The following is a summary of changes in Capital Assets for the year ended June 30, 2012:

	Beginning Balance	Additions	Deletions	Ending Balance
Capital Assets, Not Depreciated				
Land	$ 13,636,663	$ 66,800	$ -	$ 13,703,463
Construction in Progress	17,909,282	19,086,698	(19,543,706)	17,452,274
Total Capital Assets Not Depreciated	31,545,945	19,153,498	(19,543,706)	31,155,737
Capital Assets, Being Depreciated				
Infrastructure	577,926,518	20,908,862	(940,451)	597,894,929
Field Equipment	9,847,809	149,661	(1,395,410)	8,602,060
Buildings	18,451,132	198,077	-	18,649,209
Transportation Equipment	3,177,687	221,872	(178,310)	3,221,249
Communication Equipment	2,359,043	155,108	-	2,514,151
Office Equipment	17,332,966	681,123	(812,669)	17,201,420
Total Capital Assets Being Depreciated	629,095,155	22,314,703	(3,326,840)	648,083,018
Less Accumulated Depreciation:				
Infrastructure	157,565,903	12,330,306	(637,807)	169,258,402
Field Equipment	8,619,183	149,708	(1,395,410)	7,373,481
Buildings	6,911,291	436,529		7,347,820
Transportation Equipment	2,250,422	234,188	(178,310)	2,306,300
Communication Equipment	644,017	391,829		1,035,846
Office Equipment	10,223,319	1,672,144	(808,646)	11,086,817
Total Accumulated Depreciation	186,214,135	15,214,704	(3,020,173)	198,408,666
Total Capital Assets Being Depreciated, Net	442,881,020	7,099,999	(306,667)	449,674,352
Total Capital Assets, Net	$ 474,426,965	$ 26,253,497	$ (19,850,373)	$ 480,830,089

Depreciation expense for the years ended June 30, 2012 and 2011 was $15,214,704 and $13,880,206, respectively.

3) CAPITAL ASSETS (Continued)

The following is a summary of changes in Capital Assets for the year ended June 30, 2011:

	Beginning Balance (As Restated)	Additions	Deletions	Ending Balance
Capital Assets, Not Depreciated				
Land	$ 13,620,963	$ 15,700	$ -	$ 13,636,663
Construction in Progress	35,179,104	18,141,296	(35,411,118)	17,909,282
Total Capital Assets Not Depreciated	48,800,067	18,156,996	(35,411,118)	31,545,945
Capital Assets, Being Depreciated				
Infrastructure	544,533,985	33,440,219	(47,686)	577,926,518
Field Equipment	9,529,558	489,019	(170,768)	9,847,809
Buildings	18,451,132	-	-	18,451,132
Transportation Equipment	3,278,692	347,077	(448,082)	3,177,687
Communication Equipment	1,335,820	1,023,223	-	2,359,043
Office Equipment	18,430,388	1,123,775	(2,221,197)	17,332,966
Total Capital Assets Being Depreciated	595,559,575	36,423,313	(2,887,733)	629,095,155
Less Accumulated Depreciation:				
Infrastructure	146,106,000	11,507,589	(47,686)	157,565,903
Field Equipment	8,685,579	104,372	(170,768)	8,619,183
Buildings	6,475,141	436,150	-	6,911,291
Transportation Equipment	2,477,854	203,715	(431,147)	2,250,422
Communication Equipment	468,548	175,469	-	644,017
Office Equipment	10,982,620	1,452,911	(2,212,212)	10,223,319
Total Accumulated Depreciation	175,195,742	13,880,206	(2,861,813)	186,214,135
Total Capital Assets Being Depreciated, Net	420,363,833	22,543,107	(25,920)	442,881,020
Total Capital Assets, Net	$ 469,163,900	$ 40,700,103	$ (35,437,038)	$ 474,426,965

Depreciation expense for the years ended June 30, 2011 and 2010 was $13,880,206 and $13,297,497, respectively.

4) OTHER NONCURRENT ASSETS

Deferred bond issue costs totaled $1,532,857 and $1,618,069, net of accumulated amortization of $466,081 and $380,418 as of June 30, 2012 and 2011, respectively. The costs are amortized on the straight-line method based on the estimated term of the related bond debt. Amortization expense of $85,212 and $85,212 for the years ended June 30, 2012 and 2011 is included in miscellaneous non-operating expenses.

5) LONG-TERM DEBT

Long-term liabilities for the year ended June 30, 2012 are as follows:

	Beginning Balance	Additions	Deletions	Ending Balance	Due Within One Year
General Obligation Bonds:					
Improvement District No. 27 - 2009	$ 7,260,000	$ -	$ 505,000	$ 6,755,000	$ 520,000
Unamortized Bond Premium	182,626	-	16,355	166,271	-
Deferred Amount on Refunding	(639,049)	-	(56,805)	(582,244)	-
Net General Obligation Bonds	6,803,577	-	464,550	6,339,027	520,000
Certificates of Participation:					
1996 Certificates of Participation	11,300,000	-	400,000	10,900,000	500,000
2004 Certificates of Participation	9,245,000	-	565,000	8,680,000	580,000
2007 Certificates of Participation	39,550,000	-	885,000	38,665,000	920,000
1996 COPS Unamortized Discount	(11,923)	-	(745)	(11,178)	-
2007 COPS Unamortized Discount	(232,131)	-	(9,044)	(223,087)	-
2004 COPS Unamortized Premium	14,170	-	1,165	13,005	-
2004 COPS Deferred Amount on Refunding	(149,585)	-	(12,294)	(137,291)	-
Net Certificates of Participation	59,715,531	-	1,829,082	57,886,449	2,000,000
Revenue Bonds:					
2010 Water Revenue Bonds Series A	13,840,000		785,000	13,055,000	800,000
2010 Water Revenue Bonds Series B	36,355,000		-	36,355,000	-
2010 Series A Unamortized Premium	985,822		74,401	911,421	-
Net Revenue Bonds	51,180,822	-	859,401	50,321,421	800,000
Notes Payable:					
State Water Resource Control Board	6,010	-	6,010	-	-
Total Long-Term Liabilities	$117,705,940	$ -	$ 3,159,043	$114,546,897	$3,320,000

5) LONG-TERM DEBT – Continued

General Obligation Bonds

In June 1998, the District issued $11,835,000 of General Obligation Refunding Bonds. The proceeds of this issue, together with other lawfully available monies, were to be used to establish an irrevocable escrow to advance refund and defease in their entirety the District's previous outstanding General Obligation Bond issue. In November 2009, The District issued $7,780,000 of General Obligation Refunding Bonds to refund the 1998 issue. The proceeds from the bond issue were $7,989,884, which included an original issue premium of $209,884. An amount of $7,824,647, which consisted of unpaid principal and accrued interest, was deposited into an escrow fund. Pursuant to an optional redemption clause in the 1998 bonds, the District was able to redeem the 1998 bonds, without premium at any time after September 1, 2009. On December 15, 2009 the 1998 bonds were refunded.

The savings between the cash flow required to service the old debt and the cash flow required to service the new debt is $1,099,110 and represents an economic gain on refunding of $640,925.

These bonds are general obligations of Improvement District No. 27 (ID 27) of the District. The Board of Directors has the power and is obligated to levy annual ad valorem taxes without limitation, as to rate or amount for payment of the bonds and the interest upon all property which is within ID 27 and subject to taxation. The General Obligation Bonds are payable from District-wide tax revenues. The Board may utilize other sources for servicing the bond debt and interest.

The refunding of the 1998 bonds resulted in a deferred amount of $728,989 which is being amortized over the remaining life of the refunded debt. Amortization for the year ended June 30, 2012 was $56,805 and is included in miscellaneous non-operating expenses. As of June 30, 2012, the unamortized deferred amount of refunding is $582,244.

The 2009 General Obligation Bonds have interest rates from 3.00% to 4.00% with maturities through Fiscal Year 2023.

Future debt service requirements for the bonds are as follows:

For the Year Ended June 30,	Principal	Interest	Total
2013	$ 520,000	$ 236,262	$ 756,262
2014	535,000	220,437	755,437
2015	550,000	204,162	754,162
2016	570,000	187,362	757,362
2017	585,000	169,306	754,306
2018-2022	3,275,000	481,300	3,756,300
2023	720,000	14,403	734,403
	$ 6,755,000	$ 1,513,232	$ 8,268,232

5) LONG-TERM DEBT - Continued

Certificates of Participation (COPS)

In June 1996, COPS with face value of $15,400,000 were sold by the Otay Service Corporation to finance the cost of design, acquisition, and construction of certain capital improvements. An installment purchase agreement between the District, as Buyer, and the Corporation, as Seller, was executed for the scheduled payment of principal and interest associated with the COPS. The installment payments are to be paid from taxes and "net revenues," as described in the installment agreement. The certificates bear interest at a variable weekly rate not to exceed 12%. The variable interest rate is tied to the 30-day LIBOR index and the Securities Industry and Financial Markets Association (SIFMA) index. An irrevocable letter of credit facility is necessary to market the District's variable rate debt. This facility is with Union Bank and covers the outstanding principal and interest. The facility expires on June 29, 2014.The interest rate at June 30, 2012 was 0.15%. The installment payments are to be paid annually at $350,000 to $900,000 from September 1, 1996 through September 1, 2026.

In July 2004, Refunding Certificates of Participation (COPS) with a face value of $12,270,000 were sold by the Otay Service Corporation to advance refund $11,680,000 of outstanding 1993 COPS. An installment agreement between the District, as Buyer, and the Corporation, as Seller, was executed for the scheduled payment of principal and interest associated with the COPS. The installment payments are to be paid from taxes and "net revenues," as described in the installment agreement. The certificates are due in annual installments of $445,000 to $895,000 from September 1, 2005 through September 1, 2023; bearing interest at 3% to 4.625%.

In March 2007, Revenue Certificates of Participation (COPS) with face value of $42,000,000 were sold by the Otay Service Corporation to improve the District's water storage system and distribution facilities. An installment purchase agreement between the District, as a Buyer, and the Corporation, as Seller, was executed for the scheduled payment of principal and interest associated with the COPS. The installment payments are to be paid from taxes and "net revenues," as described in the installment agreement. The certificates are due in annual installments of $785,000 to $2,445,000 from September 1, 2007 through September 1, 2036; bearing interest at 3.7% to 4.47%.

There is no aggregate reserve requirement for the COPS. Future debt service requirements for the certificates are as follows:

For the Year	1996 COPS		2004 COPS		2007 COPS	
Ended June 30,	Principal	Interest*	Principal	Interest	Principal	Interest
2013	$ 500,000	$ 15,725	$ 580,000	$ 349,566	$ 920,000	$ 1,589,020
2014	500,000	14,975	600,000	328,906	955,000	1,553,864
2015	500,000	14,225	625,000	306,388	995,000	1,517,301
2016	600,000	13,350	650,000	281,994	1,035,000	1,479,239
2017	600,000	12,450	675,000	255,819	1,075,000	1,439,408
2018-2022	3,500,000	47,225	3,795,000	828,394	6,020,000	6,529,600
2023-2027	4,700,000	16,325	1,755,000	81,441	7,360,000	5,181,071
2028-2032	-	-	-	-	9,070,000	3,453,857
2033-2037	-	-	-	-	11,235,000	1,271,265
	$10,900,000	$ 134,275	$ 8,680,000	$ 2,432,508	$38,665,000	$ 24,014,625

* Variable Rate - Interest reflected at June 30, 2012 at a rate of 0.15%.

The three COP debt issues contain various covenants and restrictions, principally that the District fix, prescribe, revise and collect rates, fees and charges for the Water System which will be at least sufficient to yield, during each fiscal year, taxes and net revenues equal to one hundred twenty-five percent (125%) of the debt service for such fiscal year. The District was in compliance with these rate covenants for the fiscal year ended June 30, 2012.

5) LONG-TERM DEBT - Continued

Water Revenue Bonds

In April 2010, Water Revenue Bonds with a face value of $50,195,000 were sold by the Otay Water District Financing Authority to provide funds for the construction of water storage and transmission facilities. The bond issue consisted of two series; Water Revenue Bonds, Series 2010A (Non-AMT Tax Exempt) with a face value of $13,840,000 plus a $1,078,824 original issue premium, and Water Revenue Bonds Series 2010B (Taxable Build America Bonds) with a face value of $36,255,000. The Series 2010A bonds are due in annual installments of $785,000 to $1,295,000 from September 1, 2012 through September 1, 2025; bearing interest at 2% to 5.25%. The Series 2010B bonds are due in annual installments of $1,365,000 to $3,505,000 from September 1, 2026 through September 1, 2040; bearing interest at 6.377% to 6.577%. Interest on both Series is payable on September 1, 2010 and semiannually thereafter on March 1st and September 1st of each year until maturity or earlier redemption. The installment payments are to be made from Taxes and Net Revenues of the Water System as described in the installment purchase agreement, on parity with the payments required to be made by the District for the 1996, 2004 and 2007 Certificates of Participation described above.

The proceeds of the bonds will be used to fund the project described above as well as to fund reserve funds of $1,030,688 (Series 2010A) and $2,707,418 (Series 2010B). $542,666 was used to fund various costs of issuance.

The original issue premium is being amortized over the 14 year life of the Series 2010A bonds. Amortization for the year ending June 30, 2012 was $74,402 and is included in interest expense. The unamortized premium at June 30, 2012 is $911,421.

The 2011 Water Revenue Bonds contains various covenants and restrictions, principally that the District fix, prescribe, revise and collect rates, fees and charges for the Water System which will be at least sufficient to yield, during each fiscal year, taxes and net revenues equal to one hundred twenty-five percent (125%) of the debt service for such fiscal year. The District was in compliance with these rate covenants for the fiscal year ended June 30, 2012.

The total amount outstanding at June 30, 2012 and aggregate maturities of the revenue bonds for the fiscal years subsequent to June 30, 2012, are as follows:

For the Year	2010 Water Revenue Bond Series A		2010 Water Revenue Bond Series B	
Ended June 30,	Principal	Interest	Principal	Interest
2013	$ 800,000	$ 553,838	$ -	$ 2,371,868
2014	820,000	533,538	-	2,371,868
2015	845,000	508,563	-	2,371,868
2016	870,000	478,488	-	2,371,868
2017	900,000	443,088	-	2,371,868
2018-2022	5,115,000	1,584,988	-	11,859,342
2023-2027	3,705,000	291,969	2,815,000	11,682,539
2028-2032	-	-	8,760,000	9,631,794
2033-2037	-	-	12,005,000	6,275,280
2038-2042	-	-	12,775,000	1,747,344
	$ 13,055,000	$ 4,394,470	$ 36,355,000	$ 53,055,639

5) LONG-TERM DEBT - Continued

Note Payable

In December 1990, the District entered into a 3.5% note payable to the State Water Resources Control Board. This note is unsecured and payable in annual installments of $366,325 including principal and interest from 1992 through 2012. The note was paid off during the year.

6) NET ASSETS

Designated Net Assets

In addition to the restricted net assets, a portion of the unrestricted net assets have been designated by the Board of Directors for the following purposes as of June 30, 2012 and 2011:

	2012	2011
Designated Betterment	$ -	$ 13,221,595
Expansion Reserve	17,943,825	13,216,223
Replacement Reserve	15,911,850	30,156,082
Designated New Supply Fund	1,593,571	-
Employee Benefits Reserve	1,660,369	4,526,516
Total	$ 37,109,615	$ 61,120,416

7) DEFINED BENEFIT PENSION PLAN

Plan Description

The District's defined plan, (the "Plan"), provides retirement and disability benefits, annual cost-of-living adjustments, and death benefits to plan members and beneficiaries. The Plan is part of the Public Agency portion of the California Public Employees' Retirement System (CalPERS), an agent multiple-employer plan administered by CalPERS, which acts as a common investment and administrative agent for participating public employers within the State of California. A menu of benefit provisions as well as other requirements is established by State statute within the Public Employees' Retirement Law. The Plan selects optional benefit provisions from the benefit menu by contract with CalPERS and adopts those benefits through District resolution. CalPERS issues a separate Comprehensive Annual Financial Report. Copies of the CalPERS' annual financial report may be obtained from the CalPERS Executive Office, 400 P Street, Sacramento, California 95814.

7) DEFINED BENEFIT PENSION PLAN - Continued

Funding Policy

Active members in the Plan are required to contribute 8% of their annual covered salary. By agreement between the employee union and the District, the represented employees paid 5.25% of covered salaries beginning August 15, 2011. Also by agreement, the unrepresented employees began paying 4.5% of covered salaries as of July 15, 2011. Prior to these agreements all employees paid 1% of covered salaries. In these same agreements, all employees, after June 30, 2012 will pay an additional 3.5% of covered salaries. The District is required to contribute the actuarially determined remaining amounts necessary to fund the benefits for its members. The actuarial methods and assumptions used are those adopted by the CalPERS Board of Administration. The required employer contribution rate for the fiscal year ended June 30, 2012 was 23.428%. The contribution requirements of the Plan members are established by State statute and the employer contribution rate is established and may be amended by the CalPERS.

Annual Pension Costs

For the fiscal year ended June 30, 2012, the District's annual pension cost and actual contribution was $2,951,409. The required contribution for the fiscal year ended June 30, 2012 was determined as part of the June 30, 2009 actuarial valuation.

The following is a summary of the actuarial assumptions and methods:

Valuation Date	June 30, 2009
Actuarial Cost Method	Entry Age Actuarial Cost Method
Amortization Method	Level Percent of Payroll
Average Remaining Period	21 Years as of the Valuation Date
Asset Valuation Method	15 Year Smoothed Market
Actuarial Assumptions:	
Investment Rate of Return	7.75% (Net of Administrative Expenses)
Projected Salary Increase	3.55% to 14.45% Depending on Age, Service, and Type of Employment
Inflation	3.00%
Payroll Growth	3.25%
Individual Salary Growth	A merit scale varying by duration of employment coupled with an assumed annual inflation component of 3.00% and an annual production growth of 0.25%.

Initial unfunded liabilities are amortized over a closed period that depends on the Plan's date of entry into CalPERS. Subsequent Plan amendments are amortized as a level percentage of pay over a closed 20-year period. Gains and losses that occur in the operation of the plan are amortized over a rolling period, which results in an amortization of 6% of unamortized gains and losses each year. If the plan's accrued liability exceeds the actuarial value of the plan assets, then the amortization payment of the total unfunded liability may be lower than the payment calculated over a 30-year amortization period.

THREE-YEAR TREND INFORMATION FOR PERS

Fiscal Year	Annual Pension Cost (APC)	Percentage of APC Contributed	Net Pension Obligation
6/30/12	$ 2,951,409	100%	$ 0
6/30/11	$ 2,427,744	100%	$ 0
6/30/10	$ 2,240,538	100%	$ 0

Funded Status and Funding Progress

As of June 30, 2010, the most recent actuarial valuation date, the plan was 70.9% funded. The actuarial accrued liability (AAL) for benefits was $81,306,934, and the actuarial value of assets was $57,613,987, resulting in an unfunded actuarial accrued liability (UAAL) of $23,692,947. The covered payroll (annual payroll of active employees covered by the plan) was $12,140,989, and the ratio of the UAAL to the covered payroll was 195.1%.

The schedule of funding progress, presented as *required supplementary information* following the notes to the financial statements, presents multiyear trend information about whether the actuarial value of plan assets is increasing or decreasing over the time relative to the actuarial accrued liability for benefits.

8) OTHER POST EMPLOYMENT BENEFITS

Plan Description

The District's defined benefit postemployment healthcare plan, (DPHP), provides medical benefits to eligible retired District employees and beneficiaries. DPHP is part of the Public Agency portion of the California Employers' Retiree Benefit Trust Fund (CERBT), an agent multiple-employer plan administered by California Public Employees' Retirement System (CalPERS), which acts as a common investment and administrative agent for participating public employers within the State of California. CalPERS issues a separate Comprehensive Annual Financial Report. Copies of the CalPERS' annual financial report may be obtained from the CalPERS Executive Office, 400 P Street, Sacramento, California 95814.

Prior to the plan agreements signed in 2011 the eligibility in the plan was broken into 3 tiers, employees hired before January 1, 1981, employees hired between January 1,1981 and July 1, 1993 and employees hired on or after July 1, 1993. Board Members elected before January 1, 1995 are also eligible for the plan. Eligibility also includes age and years of service requirements which vary by tier. Benefits include 100% medical and dental premiums for life for the retiree for Tier I, II or III employees, and up to 100% spouse premium for life and dependent premium up to age 19 depending on the tier. The plan also includes survivor benefits to Medicare.

Subsequent to the agreements in 2011 the represented employees are eligible for the plan after 20 years of consecutive service while unrepresented employees are eligible after 15 years. Survivor benefits are covered beyond Medicare.

Funding Policy

The contribution requirements of plan members and the District are established and may be amended by the Board of Directors. DPHP members receiving benefits contribute based on their selected plan options of EPO, HMO or Gold and if they are located outside the State of California. Contributions by plan members range from $0 to $146 per month for coverage to age 65, and from $0 to $147 per month, respectively, thereafter.

Annual OPEB Cost and Net OPEB Obligation/Asset

The District's annual OPEB cost (expense) is calculated based on the annual required contribution of the employer (ARC), an amount actuarially determined in accordance with the parameters of GASB Statement 45. The ARC represents a level of funding that, if paid on an ongoing basis is projected to cover the normal annual cost. Any unfunded actuarial liability (or funding excess) is amortized over a period not to exceed thirty years. The current ARC rate is 10.5% of the annual covered payroll.

The following table shows the components of the District's annual OPEB cost for the year, the amount actually contributed to the plan, and changes in the District's net OPEB obligation/asset:

	2012	2011
Annual Required Contribution (ARC)	$ 1,304,000	$ 289,000
Interest on net OPEB asset	(537,685)	(525,712)
Adjustment to Annual Required Contribution (ARC)	473,000	646,000
Annual OPEB cost (expense)	1,239,315	409,288
Contributions made	2,144,871	1,042,249
Increase in net OPEB asset	(905,556)	(632,961)
Net OPEB asset - beginning of year	(7,416,346)	(6,783,385)
Net OPEB asset - end of year	$ (8,321,902)	$ (7,416,346)

8) OTHER POST EMPLOYMENT BENEFITS - Continued

For 2012, in addition to the ARC, the District contributed cash benefit payments outside the trust (healthcare premium payments for retirees to Special District Risk Management Authority (SDRMA)) in the amount of $749,871, which is included in the $2,144,871 of contributions shown above. For 2011 this amount was $654,250, which is included in the $1,042,249 of contributions shown above.

The District's annual OPEB cost, the percentage of annual OPEB cost contributed to the plan, and the net OPEB obligation/asset for the fiscal years 2012, 2011 and 2010 were as follows:

THREE-YEAR TREND INFORMATION FOR CERBT

Fiscal Year	Annual OPEB Cost (AOC)	Percentage of OPEB Cost Contributed	Net OPEB Asset
6/30/2012	$ 1,239,315	173%	$ (8,321,902)
6/30/2011	$ 409,288	255%	$ (7,416,346)
6/30/2010	$ 455,122	227%	$ (6,783,385)

Funded Status and Funding Progress

The funded status of the plan as of June 30, 2011, the most recent actuarial valuation date, was as follows:

Actuarial Accrued Liability (AAL)	$ 18,289,000
Actuarial Value of Plan Assets	$ 7,893,000
Unfunded Actuarial Accrued Liability (UAAL)	$ 10,396,000
Funded Ratio (Actuarial Value of Plan Assets/AAL)	43.16%
Covered Payroll (Active Plan Members)	$ 12,429,000
UAAL as a Percentage of Covered Payroll	83.64%

Actuarial valuations of an ongoing plan involve estimates of the value of reported amounts and assumptions about the probability of occurrence of events far into the future. Examples include assumptions about future employment, mortality, and the healthcare cost trend. Amounts determined regarding the funded status of the plan and the annual required contributions of the employer are subject to continual revision as actual results are compared with past expectations and new estimates are made about the future. The schedule of funding progress, presented as required supplementary information following the notes to the financial statements, presents multi-year trend information about whether the actuarial value of plan assets is increasing or decreasing over time relative to the actuarial accrued liabilities for the benefits.

8) OTHER POST EMPLOYMENT BENEFITS - Continued

Actuarial Methods and Assumptions

Projections of benefits for financial reporting purposes are based on the substantive plan (the plan as understood by the employer and the plan members) and include the types of benefits provided at the time of each valuation and the historical pattern of sharing of benefit costs between employer and plan members to that point. The actuarial methods and assumptions used include techniques that are designed to reduce the effects of short-term volatility in actuarial accrued liabilities and the actuarial assets, consistent with the long-term perspective of the calculations.

The following is a summary of the actuarial assumptions and methods:

Valuation Date	June 30, 2011
Actuarial Cost Method	Entry Age Normal Cost Method
Amortization Method	Level Percent of Payroll
Remaining Amortization Period	26 Year fixed (closed) period as of the Valuation Date
Asset Valuation Method	15 Year Smoothed Market
Actuarial Assumptions:	
Investment Rate of Return	7.25% (Net of Administrative Expenses)
Projected Salary Increase	3.25%
Inflation	3.00%
Individual Salary Growth	CalPERS 1997-2007 Experience Study
Healthcare Cost Trend Rate	Medical: 10% per annum graded down in approximately one-half percent increments to an ultimate rate of 5%. Dental: 4% per annum.

9) WATER CONSERVATION AUTHORITY

In 1999 the District formed the Water Conservation Authority (the "Authority"), a Joint Powers Authority, with other local entities to construct, maintain and operate a xeriscape demonstration garden in the furtherance of water conservation. The authority is a non-profit public charity organization and is exempt from income taxes. During the years ended June 30, 2012 and 2011, the District contributed $121,617 and $120,648, respectively, for the development, construction and operation costs of the xeriscape demonstration garden.

A summary of the Authority's June 30, 2011 audited financial statement is as follows (latest report available):

Assets	$	1,815,887
Liabilities		85
Net Assets	$	1,815,802
Revenues, Gains and Other Support	$	370,012
Expenses		(597,808)
Transfer of Assets		(367,946)
Changes in Net Assets	$	(595,742)

10) COMMITMENTS AND CONTINGENCIES

Construction Commitments

The District had committed to capital projects under construction with an estimated cost to complete of $3,151,775 at June 30, 2012.

Litigation

Certain claims, suits and complaints arising in the ordinary course of operation have been filed or are pending against the District. In the opinion of the staff and counsel, all such matters are adequately covered by insurance, or if not so covered, are without merit or are of such kind, or involved such amounts, as would not have a significant effect on the financial position or results of operations of the District if disposed of unfavorably.

Refundable Terminal Storage Fees

The District has entered into an agreement with several developers whereby the developers prepaid the terminal storage fee in order to provide the District with the funds necessary to build additional storage capacity. The agreement further allows the developers to relinquish all or a portion of such water storage capacity. If the District grants to another property owner the relinquished storage capacity, the District shall refund to the applicable developer $746 per equivalent dwelling unit (EDU). There were 17,867 EDUs that were subject to this agreement. At June 30, 2011, 1,751 EDUs had been relinquished and refunded, 14,663 EDUs had been connected, and 1,453 EDUs have neither been relinquished nor connected. At June 30, 2012, 1,751 EDUs had been relinquished and refunded, 15,026 EDUs had been connected, and 1,090 EDUs have neither been relinquished nor connected.

Developer Agreements

The District has entered into various Developer Agreements with developers towards the expansion of District facilities. The developers agree to make certain improvements and after the completion of the projects the District agrees to reimburse such improvements with a maximum reimbursement amount for each developer. Contractually, the District does not incur a liability for the work until the work is accepted by the District. As of June 30, 2012, none of the outstanding developer agreements had been accepted, however it is anticipated that the District will be liable for an amount not to exceed $56,000 at the point of acceptance. Accordingly, the District has accrued a liability as of year end.

11) RISK MANAGEMENT

The District is exposed to various risks of loss related to torts, theft, damage and destruction of assets, errors and omissions, and natural disasters. Beginning in July 2003, the District began participation in an insurance pool through the Special District Risk Management Authority (SDRMA). SDRMA is a not-for-profit public agency formed under California Government Code Sections 6500 et. Seq. SDRMA is governed by a board composed of members from participating agencies. The mission of SDRMA is to provide renewable, efficiently priced risk financing and risk management services through a financially sound pool. The District pays an annual premium for commercial insurance covering general liability, excess liability, property, automobile, public employee dishonesty, and various other claims. Accordingly, the District retains no risk of loss. Separate financial statements of SDRMA may be obtained at Special District Risk Management Authority, 1112 “I” Street, Suite 300, Sacramento, CA 95814.

General and Auto Liability, Public Officials’ and Employees’ Errors and Omissions and Employment Practices Liability: Total risk financing limits of $10 Million combined single limit at $10 Million per occurrence, subject to the following deductibles:

$500 per occurrence for third party general liability property damage;

$1,000 per occurrence for third party auto liability property damage;

50% co-insurance of cost expended by SDRMA, in excess of $10,000 up to $50,000, per occurrence, for employment related claims. However, 100% of the obligation will be waived if certain criteria are met, as provided in the Memorandum of Coverage.

11) RISK MANAGEMENT (Continued)

Employee Dishonesty Coverage: Total of $400,000 per loss includes Public Employee Dishonesty, Forgery or Alteration and Theft, Disappearance and Destruction coverage's effective July 1, 2011.

Property Loss: Replacement cost, for property on file, if replaced, and if not replaced within two years after the loss, paid on an actual cash value basis, to a combined total of $1 Billion per occurrence, subject to a $2,000 deductible per occurrence, effective July 1, 2011.

Boiler and Machinery: Replacement cost up to $100 Million per occurrence, subject to a $1,000 deductible, effective July 1, 2011.

Public Officials Personal Liability: $500,000 each occurrence, with an annual aggregate of $500,000 per each elected/appointed official to which this coverage applies, subject to the terms, conditions and exclusions as provided in the Memorandum of Coverage's, deductible of $500 per claim, effective July 1, 2011.

Comprehensive and Collision: on selected vehicles, with deductibles of $250/$500 or $500/$1,000, as elected; ACV limits; fully self-funded by SDRMA; Policy No. LCA - SDRMA - 201111, effective July 1, 2011.

Workers' Compensation Coverage and Employer's Liability: Statutory limits per occurrence for Workers' Compensation and $5.0 Million for Employer's Liability Coverage, subject to the terms, conditions and exclusions as provided in the Memorandum of Coverage, effective July 1, 2011.

Health Insurance

Beginning in January 2008, the District began providing health insurance through SDRMA covering all of its employees, retirees, and other dependents. SDRMA is a self-funded, pooled medical program, administered in conjunction with the California State Association of Counties (CSAC).

Adequacy of Protection

During the past three fiscal (claims) years none of the above programs of protection have had settlements or judgments that exceeded pooled or insured coverage. There have been no significant reductions in pooled or insured liability coverage from coverage in the prior year.

12) INTEREST EXPENSE

Interest expense for the years ended June 30, 2012 and 2011, is as follows:

	2012	2011
Amount Expensed	$ 3,899,927	$ 3,877,531
Amount Capitalized as a Cost of Construction Projects	1,185,443	1,215,476
Total Interest	$ 5,085,370	$ 5,093,007

13) SEGMENT INFORMATION

During the June 30, 2011 fiscal year, the District issued Revenue Bonds to finance certain capital improvements. While water and wastewater services are accounted for jointly in these financial statements, the investors in the Revenue Bonds rely solely on the revenues of the water services for repayment.

Summary financial information for the water services is presented for June 30, 2012.

Condensed Statement of Net Assets
June 30, 2012

	Water Services
ASSETS	
Current Assets	$ 102,545,752
Capital Assets	464,947,634
Other Assets	9,854,759
Total Assets	577,348,145
LIABILITIES	
Current Liabilities	22,900,886
Long-Term Liabilities	111,941,023
Total Liabilities	134,841,909
NET ASSETS	
Invested in capital assets, net of related debt	365,842,560
Restricted for debt service	4,715,904
Unrestricted	71,947,772
Total Net Assets	$ 442,506,236

13) SEGMENT INFORMATION - Continued

Condensed Statement of Revenues, Expenses and Changes in Net Assets
For The Year Ended June 30, 2012

	Water Services
Operating Revenues	
Water sales	$ 63,803,099
Connection and other fees	1,993,555
Total Operating Revenues	65,796,654
Operating Expenses	
Cost of Water Sales	46,106,403
Administrative and General	17,901,008
Depreciation	14,367,787
Total Operating Expenses	78,375,198
Operating Income (Loss)	(12,578,544)
Nonoperating Revenues (Expenses)	
Investment income	416,045
Taxes and assessments	3,487,954
Availability charges	646,278
Gain (loss) on sale of capital assets	(278,540)
Miscellaneous revenues	4,788,711
Donations	(121,617)
Interest expense	(3,899,927)
Miscellaneous expenses	(1,755,782)
Total Nonoperating Revenues (Expenses)	3,283,122
Income (Loss) Before Capital Contributions	(9,295,422)
Capital Contributions	6,942,986
Changes in Net Assets	(2,352,436)
Total Net Assets, Beginning	444,858,672
Total Net Assets, Ending	$ 442,506,236

13) SEGMENT INFORMATION - Continued

Condensed Statement of Cash Flows

For The Year Ended June 30, 2012

	Water Services
Net Cash Provided by Operating Activities	$ 1,295,193
Net Cash Provided by Noncapital and Related Financing Activities	3,944,795
Net Cash Provided (Used) by Capital and Related Financing Activities	(20,519,687)
Net Cash Used by Investing Activities	(3,389,679)
Net Increase (Decrease) in Cash and Cash Equivalents	(18,669,378)
Cash and cash equivalents, Beginning	53,802,559
Cash and cash equivalents, Ending	$ 35,133,181

REQUIRED SUPPLEMENTARY INFORMATION
YEARS ENDED JUNE 30, 2012 AND 2011

Schedule of Funding Progress for PERS

Actuarial Valuation Date	Actuarial Value of Assets (A)	Actuarial Accrued Liability (AAL) Entry Age (B)	Unfunded AAL (UAAL) (B - A)	Funded Ratio (A/B)	Covered Payroll (C)	UAAL as a Percentage of Covered Payroll [(B-A)/C]
6/30/10 Miscellaneous	$ 57,613,987	$ 81,306,934	$ 23,692,947	70.9%	$ 12,140,989	195.1%
6/30/09 Miscellaneous	$ 53,736,612	$ 75,300,790	$ 21,564,178	71.4%	$ 11,880,481	181.5%
6/30/08 Miscellaneous	$ 49,712,016	$ 65,542,736	$ 15,830,720	75.8%	$ 11,174,528	141.7%

Schedule of Funding Progress for DPHP

Actuarial Valuation Date	Actuarial Value of Assets (A)	Actuarial Accrued Liability (AAL) Entry Age (B)	Unfunded AAL (UAAL) (B - A)	Funded Ratio (A/B)	Covered Payroll (C)	UAAL as a Percentage of Covered Payroll [(B-A)/C]
6/30/11 Miscellaneous	$ 7,893,000	$ 18,289,000	$ 10,396,000	43.16%	$ 12,429,000	83.64%
6/30/09 Miscellaneous	$ 6,273,000	$ 10,070,000	$ 3,797,000	62.29%	$ 11,878,000	31.97%
6/30/08 Miscellaneous	$ 5,649,000	$ 11,581,000	$ 5,932,000	48.78%	$ 11,307,000	52.50%

WHITE, NELSON & CO. LLP
Certified Public Accountants & Consultants

REPORT ON INTERNAL CONTROL OVER FINANCIAL REPORTING AND ON COMPLIANCE AND OTHER MATTERS BASED ON AN AUDIT OF FINANCIAL STATEMENTS PERFORMED IN ACCORDANCE WITH *GOVERNMENT AUDITING STANDARDS*

Board of Directors and Management
of Otay Water District
Spring Valley, California

We have audited the financial statements of the Otay Water District as of and for the year ended June 30, 2012, and have issued our report thereon dated October 15, 2012. We conducted our audit in accordance with auditing standards generally accepted in the United States of America and the standards applicable to financial audits contained in *Government Auditing Standards*, issued by the Comptroller General of the United States.

Internal Control Over Financial Reporting

Management of Otay Water District is responsible for establishing and maintaining effective internal control over financial reporting. In planning and performing our audit, we considered the Otay Water District's internal control over financial reporting as a basis for designing our auditing procedures for the purpose of expressing our opinion on the financial statements, but not for the purpose of expressing an opinion on the effectiveness of the Otay Water District's internal control over financial reporting. Accordingly, we do not express an opinion on the effectiveness of the Otay Water District's internal control over financial reporting.

A *deficiency in internal control* exists when the design or operation of a control does not allow management or employees, in the normal course of performing their assigned functions, to prevent, or detect and correct misstatements on a timely basis. A *material weakness* is a deficiency, or a combination of deficiencies, in internal control such that there is a reasonable possibility that a material misstatement of the entity's financial statements will not be prevented, or detected and corrected on a timely basis.

Our consideration of internal control over financial reporting was for the limited purpose described in the first paragraph of this section and was not designed to identify all deficiencies in internal control over financial reporting that might be deficiencies, significant deficiencies, or material weaknesses. We did not identify any deficiencies in internal control over financial reporting that we consider to be material weaknesses, as defined previously.

Compliance and Other Matters

As part of obtaining reasonable assurance about whether the Otay Water District's financial statements are free of material misstatement, we performed tests of its compliance with certain provisions of laws, regulations, contracts, and grant agreements, noncompliance with which could have a direct and material effect on the determination of financial statement amounts. However, providing an opinion on compliance with those provisions was not an objective of our audit, and accordingly, we do not express such an opinion. The results of our tests disclosed no instances of noncompliance or other matters that are required to be reported under *Government Auditing Standards*.

This report is intended solely for the information and use of management, Board of Directors, others within the entity, and federal awarding agencies and pass-through entities and is not intended to be and should not be used by anyone other than these specified parties.

White Nelson Diehl Evans LLP

October 15, 2012
Carlsbad, CA

2965 Roosevelt Street, Carlsbad, CA 92008-2389 • Tel: 760.729.2343 • Fax: 760.729.2234

Offices located in Orange and San Diego Counties

Attachment D

WHITE NELSON DIEHL EVANS LLP
Certified Public Accountants & Consultants

Board of Directors
Audit Committee
Otay Water District
Spring Valley, California

We have audited the financial statements of the Otay Water District for the year ended June 30, 2012. Professional standards require that we provide you with information about our responsibilities under generally accepted auditing standards (and, if applicable, *Government Auditing Standards*), as well as certain information related to the planned scope and timing of our audit. We have communicated such information in our letter dated January 30, 2012. Professional standards also require that we communicate to you the following information related to our audit.

Significant Audit Findings:

Qualitative Aspects of Accounting Practices

Management is responsible for the selection and use of appropriate accounting policies. The significant accounting policies used by the Otay Water District are described in Note 1 to the financial statements. No new accounting policies were adopted and the application of existing policies was not changed during the year ended June 30, 2012. We noted no transactions entered into by the Otay Water District during the year for which there is a lack of authoritative guidance or consensus. All significant transactions have been recognized in the financial statements in the proper period.

Accounting estimates are an integral part of the financial statements prepared by management and are based on management's knowledge and experience about past and current events and assumptions about future events. Certain accounting estimates are particularly sensitive because of their significance to the financial statements and because of the possibility that future events affecting them may differ significantly from those expected. The most sensitive estimates affecting the financial statements were:

a. Management's estimate of the fair market value of investments which is based on market values by outside sources.

b. The estimated useful lives for capital assets and depreciation expense which are based on industry standards.

2965 Roosevelt Street, Carlsbad, CA 92008-2389 • Tel: 760.729.2343 • Fax: 760.729.2234

Offices located in Orange and San Diego Counties

Significant Audit Findings (Continued):

Qualitative Aspects of Accounting Practices (Continued)

c. The annual required contribution for the District's Other Post-Employment Benefits was prepared by an outside consultant.

d. The funded status and funding progress of the public defined benefit plan with CalPERS which are based on actuarial valuations.

We evaluated the key factors and assumptions used to develop these estimates in determining that they are reasonable in relation to the financial statements taken as a whole.

Certain financial statement disclosures are particularly sensitive because of their significance to financial statement users. The most sensitive disclosures affecting the financial statement were reported in Note 7 regarding the defined benefit pension plan and in Note 8 regarding the District's other post-employment benefit plan. The financial statement disclosures are neutral, consistent, and clear.

Difficulties Encountered in Performing the Audit

We encountered no significant difficulties in dealing with management in performing and completing our audit.

Corrected and Uncorrected Misstatements

Professional standards require us to accumulate all known and likely misstatements identified during the audit, other than those that are clearly trivial, and communicate them to the appropriate level of management. Management has corrected all such misstatements. The following misstatements detected as a result of audit procedures were corrected by management:

a. During the course of the audit it was determined that the District had decreased the balance in the Construction in Process account by $442,015 by removing the balance directly from an equity account. The District had determined that capital expenditures from a prior year project (in Construction in Process at the start of the year) were no longer capitalizable. Rather than expensing the amount in the current year the District had booked the change directly to equity. An audit adjustment was made to record the $442,015 as a non-operating expense of the current year.

b. During the course of the audit, it was determined that $108,655 of project costs which the District had capitalized as infrastructure should have been expensed. An audit adjustment was made to remove the capital asset and to record the $108,655 as a non-operating expense of the current year. To match funding revenues to the non-operating expenses adjusted above, reclassifications were made between capital contributions and non-operating revenue in the amount of $546,326.

Significant Audit Findings (Continued):

Corrected and Uncorrected Misstatements (Continued)

c. During the course of the audit it was determined that $463,306 of costs which had been expensed by the District should have been capitalized. An audit adjustment was made to decrease the non-operating expense and increase capital assets. To match funding sources to the capital assets, $463,306 was reclassified from non-operating revenue to contributed capital.

Disagreements with Management

For the purposes of this letter, a disagreement with management is a financial accounting, reporting, or auditing matter, whether or not resolved to our satisfaction, that could be significant to the financial statements or the auditors' report. We are pleased to report that no such disagreements arose during the course of our audit.

Management Representations

We have requested certain representations from management that are included in the management representation letter dated October 15, 2012.

Management Consultations with Other Independent Accountants

In some cases, management may decide to consult with other accountants about auditing and accounting matters, similar to obtaining a "second opinion" on certain situations. If a consultation involves application of an accounting principle to the governmental unit's financial statements or a determination of the type of auditor's opinion that may be expressed on those statements, our professional standards require the consulting accountant to check with us to determine that the consultant has all the relevant facts. To our knowledge, there were no such consultations with other accountants.

Other Audit Findings or Issues

We generally discuss a variety of matters, including the application of accounting principles and auditing standards, with management each year prior to retention as the governmental unit's auditors. However, these discussions occurred in the normal course of our professional relationship and our responses were not a condition to our retention.

****

This information is intended solely for the use of the Board of Directors, Audit Committee and management of the Otay Water District and is not intended to be, and should not be, used by anyone other than these specified parties.

White Nelson Diehl Evans LLP

October 15, 2012
Carlsbad, CA

Attachment E

WHITE NELSON DIEHL EVANS LLP
Certified Public Accountants & Consultants

INDEPENDENT ACCOUNTANTS' REPORT
ON APPLYING AGREED-UPON PROCEDURES

Mr. Joseph Beachem
Chief Financial Officer
Otay Water District
Spring Valley, CA

We have performed the procedures enumerated below, which were agreed to by the Otay Water District (the "District") solely to assist the District's senior management in evaluating the investments of the District for the fiscal year ended June 30, 2012. The District's management is responsible for the evaluation of the investments of the District. This agreed-upon procedures engagement was conducted in accordance with attestation standards established by the American Institute of Certified Public Accountants. The sufficiency of these procedures is solely the responsibility of those parties specified in the report. Consequently, we make no representation regarding the sufficiency of the procedures described below either for the purpose for which this report has been requested or for any other purpose.

Our procedures and findings are as follows:

1. Obtain a copy of the District's investment policy and determine that it is in effect for the fiscal year ended June 30, 2012.
    a. Findings: At June 30, 2012, the current investment policy (Policy #27) is dated August 10, 2011. This policy was reviewed and approved for the 2011/2012 fiscal year as Action Item #12 at the August 10, 2011 Regular Board Meeting. Therefore the investment policy is in effect for the time period under review.

2. Select 4 investments held at year end and determine if they are allowable investments under the District's Investment Policy.
    a. Findings: Four investments chosen were FHLB – Maturity 12/19/2013, FHLMC – Maturity 6/4/2014, FNMA – Maturity 9/26/2014, and FFCB – Maturity 2/27/2015 CUSIP 3133EAEG9. All four investments are allowable and within maturity limits as stated in the District's Investment Policy at June 30, 2012.

2965 Roosevelt Street, Carlsbad, CA 92008-2389 • Tel: 760.729.2343 • Fax: 760.729.2234

Offices located in Orange and San Diego Counties

3. For the four investments selected in #2 above, determine if they are held by a third party custodian designated by the District.
    a. Findings: Per discussion with District management and evidenced by Union Bank of California confirmation, Union Bank does not act as a broker dealer for the District but acts as a custodial agent of the District holding the investment in a trust department. The four investments examined are held by a third party custodian designated by the District in compliance with District Policy.

4. Confirm the par or original investment amount and market value for the four investments selected above with the custodian or issuer of the investments.
    a. Findings: Investment values confirmed with Union Bank of California at June 30, 2012 with no exceptions.

5. Select two investment earnings transactions that took place during the year and recompute the earnings to determine if the proper amount was received.
    a. Findings: Investment earnings recalculated with no exceptions for two transactions selected.

6. Trace amounts received for transactions selected at #5 above into the District's bank accounts.
    a. Transactions traced into District's Union Bank of California Money Market account with no exceptions for the two transactions selected.

7. Select five investment transactions (buy, sell, trade or maturity) occurring during the year under review and determine that the transactions are permissible under the District's investment policy.
    a. Findings: Reviewed five investment transactions. All transactions were permissible under the District's Investment Policy.

8. Review the supporting documents for the five investments selected at #7 above to determine if the transactions were appropriately recorded in the District's general ledger.
    a. Findings: Five investments selected at #7 above were appropriately recorded in the District's General Ledger without exception.

We were not engaged to, and did not, conduct an audit, the objective of which would be the expression of an opinion on the investments of the District for the fiscal year ending June 30, 2012. Accordingly, we do not express such an opinion. Had we performed additional procedures, other matters might have come to our attention that would have been reported to you.

This report is limited solely for the information and use of the Board and senior management of the Otay Water District and is not intended to be and should not be used by anyone other than those specified parties.

White Nelson Diehl Evans LLP

October 15, 2012
Carlsbad, California

STAFF REPORT

TYPE MEETING:	Regular Board	MEETING DATE:	November 7, 2012
		PROJECT:	Various DIV. NO. ALL
SUBMITTED BY:	Geoff Stevens, Chief Information Officer		
APPROVED BY:	☒ German Alvarez, Assistant General Manager ☒ Mark Watton, General Manager		
SUBJECT:	RENEWAL OF MICROSOFT ENTERPRISE SOFTWARE LICENSE		

GENERAL MANAGER'S RECOMMENDATION:

That the Board authorize the General Manager to enter into a three-year (3) O&M service agreement with Softchoice Corporation in the amount of $250,638, consisting of three (3) annual payments of approximately $83,546.

COMMITTEE ACTION:

Please see "Attachment A".

PURPOSE:

To authorize the purchase of Microsoft software license support, from Softchoice Corporation, for a three-year (3) period ending June, 30 2015.

ANALYSIS:

The Board may remember that in July 2012, as part of a group of contracts valued at over $50,000 needing Board approval, the Board approved a one-year contract extension of our enterprise license for Microsoft Software. The cost was $83,546. Unfortunately, staff should have identified this FY 2013 expense as the first year cost of a three-year (3) contract extension with a total three-year value of $250,638. The level of expenditure for FY 2013 does not change and the item is budgeted in the O&M budget. As it is a three-year (3)

agreement, however, the total District commitment changes from $83,546 for just one (1) year, to approximately $250,638 for three (3) years.

While it is certainly possible to purchase a single year of support for our Microsoft software licenses, the extension of the current contract provides significant protection from further price increases and also preserves the lower cost renewal of our existing licenses. For example, our software license cost was reduced from $130,000 in 2008 to $75,000 in 2009 because the enterprise level contract had reached a "maintenance status". Failure to renew this contract as a three-year (3) contract extension would put these savings at risk, as well as price increases for major software upgrades.

FISCAL IMPACT: ☒ Joe Beachem, Chief Financial Officer

This project will utilize budgeted funds from the IT operating budget of $83,546 in the current year and a total commitment of $250,638 over three (3) years. These proposed O&M expenditures are funded by General Fund operations.

STRATEGIC GOAL:

Cost-effective enterprise software is essential to District operations in meeting our strategic and operational objectives.

LEGAL IMPACT:

None.

Attachments: Attachment A – Committee Action Report

ATTACHMENT A

SUBJECT/PROJECT:	RENEWAL OF MICROSOFT ENTERPRISE SOFTWARE LICENSE

COMMITTEE ACTION:

The Finance, Administration and Communications Committee met on October 23, 2012, to review this item. The Committee supports presentation to the full Board for their consideration.

NOTE:

The "Committee Action" is written in anticipation of the Committee moving the item forward for Board approval. This report will be sent to the Board as a committee approved item, or modified to reflect any discussion or changes as directed from the committee prior to presentation to the full Board.

STAFF REPORT

TYPE MEETING:	Regular Board	MEETING DATE:	October 23, 2012
SUBMITTED BY:	Jose Martinez, Utility Services Manager	W.O./G.F. NO:	DIV. NO. All
APPROVED BY: (Chief)	Pedro Porras, Chief, Water Operations		
APPROVED BY: (Asst. GM):	German Alvarez, Assistant General Manager		
SUBJECT:	Approval to Purchase Sewer Vactor Truck and Declaration of Unit 110 as Surplus		

GENERAL MANAGER'S RECOMMENDATION:

That the Board:

1) Authorize the General Manager to issue a purchase order to Haaker Equipment Company in the amount of $366,118.33 for the purchase of one (1) new Vactor Model 2110 Plus Jet Rodder truck; and
2) Declare Unit 110, a 1999 Vactor Jet Rodder truck surplus to the District's needs and authorized for disposal in accordance with established surplus disposal procedures.

COMMITTEE ACTION: _____

See Attachment "A".

PURPOSE:

To obtain Board authorization to purchase a Sewer Vactor Truck.

ANALYSIS:

Included in the approved FY 2013 budget is one (1) new Sewer Vactor Truck. The Sewer Vactor Truck is a replacement vehicle for existing Unit 110 which is used exclusively for work on the sewer collection system by the Utility Maintenance Staff.

This unit is important since the District is liable for substantial fines and clean-up costs in the event of a sewer spill of 1,000 gallons or more, or any discharge that reaches surface water. The District is also required to report these spills to the following agencies: California Department of Fish and Game, San Diego Regional Water Quality Control Board, Department of Environmental Services, Sweetwater Authority, and the Office of Emergency Services (O.E.S.).

Currently, the District's essential equipment includes one (1) sewer Vactor truck. Unit 110 is a 1999 Vactor Jet Rodder mounted on a Sterling chassis with 13 years of service life. This unit has 52,424 chassis miles and 10,032 operational in-service hours on it. Due to the harsh nature of the vehicle's work the useful in-service life of this machine is seven to ten years. Funding for this purchase has been included in CIP-S2042

During the last four fiscal years the District has incurred $20,571.58 in this unit corrective maintenance costs including structural body repairs, corrosion repairs and failed engine components. These repairs have resulted in approximately 30 days down time.

The latest estimate to refurbish the jet rodder and debris body on Unit 110 was provided by Haaker Equipment Company at a cost of $223,632.51 with an out of service time of 12 weeks, during which time a replacement unit would need to be rented. Please note, this quote did not include rebuilding the engine and bringing it up to current emissions specifications and/or replacing the transmission.

Based on an evaluations of work flow by the Construction/Maintenance supervision and management, it is recommended that one (1) new sewer Vactor truck Model 2110 Plus Jet Rodder be purchased for sewer collection system work and that the older sewer Vactor truck Unit 110 be declared surplus and disposed of in accordance with District procedures.

As required by District policy, bids were solicited for the proposed Vactor truck. Three (3) bids were received. Prices received include all applicable fees and taxes and delivery.

Dealer	Vehicle Bid	Bid Price
Haaker Equipment Company	Vactor Model 2110 Plus Jet Rodder.	$336,118.63
Owen Equipment	Vactor Model 2110 Plus Jet Rodder.	$384,424.00
Legacy Equipment	Vactor Model 2110 Plus Jet Rodder.	$388,085.33

FISCAL IMPACT:

Projected purchase budget for this unit is $325,000. The purchase of this vehicle will cost $336,118.63 which will be charged against the Vehicle Replacement CIP-S2042. The total cost in this account will exceed budgeted funding but will be offset by savings in the actual costs of replacement of other CIP budgeted items and the elimination of one replacement vehicle that is no longer required due to changes in staffing.

The total FY13 project budget for Vehicle Replacements is $374,000.00. Existing expenditures and current encumbrances for the CIP, including this request if approved, are $358,279.70. This will complete the purchases for vehicle replacements for this fiscal year.

Based on the Utility Service Manager's evaluation, the FY 2013 vehicle replacement budget is sufficient to complete the budgeted purchase.

The Finance Department has determined that 100% of the funds are available in the replacement fund.

Expenditure Summary:

Total FY13 Vehicle Replacement Budget:	$374,000.00
FY13 Expenditures and Encumbrances to Date: Vehicle Replacement of existing fleet.	$22,161.07
Proposed Sewer Vactor Truck Purchase:	$336,118.63
Projected Expenditures of Vehicle Replacement FY13 CIP 2282 Budget:	$358,279.70

STRATEGIC GOAL:

Operate the system to meet demand twenty-four hours a day, seven days a week.

LEGAL IMPACT:

None.

General Manager

Attachment "A", Committee Action

ATTACHMENT A

SUBJECT/PROJECT:	Approval to Purchase a Purchase Sewer Vactor Truck

COMMITTEE ACTION:

The Finance Committee met on October 23, 2012 and supported staffs' recommendation.

NOTE:

The "Committee Action" is written in anticipation of the Committee moving the item forward for board approval. This report will be sent to the Board as a committee approved item, or modified to reflect any discussion or changes as directed from the committee prior to presentation to the full board.

STAFF REPORT

TYPE MEETING:	Regular Board Meeting	MEETING DATE:	November 7, 2012
SUBMITTED BY:	Bob Kennedy Senior Civil Engineer Ron Ripperger Engineering Manager	PROJECT: N/A	DIV. NO. All
APPROVED BY: (Chief)	☒ Rod Posada, Chief, Engineering ☒ German Alvarez, Assistant General Manager ☒ Mark Watton, General Manager		
SUBJECT:	Informational Item - Proposed San Diego Gas & Electric General Rate Case Impacts on the Otay Water District		

GENERAL MANAGER'S RECOMMENDATION:

That the Otay Water District (District) Board of Directors (Board) receive as an informational item the Proposed San Diego Gas & Electric (SDG&E) General Rate Case Impacts on the District for review and receive a summary via PowerPoint presentation.

Committee Action:

Please see Attachment A.

PURPOSE:

To update the Board on the changes to electric rates proposed by SDG&E to the California Public Utility Commission (CPUC) and the potential impact on the District, as well as to report on the District's effort on sustainable energy.

ANALYSIS:

Background

On October 3, 2011, SDG&E filed an amended application with the CPUC entitled, "Amended Application of San Diego Gas & Electric Company (U902E) for Authority to Update Marginal Costs, Cost, Allocations, and Electric Rate Design" to become effective January 1, 2013. If approved, this will have a direct impact on District electric rates.

Proposed Rate Increases

SDG&E is proposing several modifications including increases to the Basic Service Fee and moving the collection of distribution demand charges to full recovery through non-coincident demand charges. SDG&E testimony to the CPUC state that the PA-T rate increase can be anywhere from 93% to 179%, with Basic Service Fee increasing 100%. The Water Authority estimated the impact on the District's electricity costs and is shown on the following table. Based on proposed electric rates with this application, an estimated 37% increase in the cost of electricity could result from these changes.

Estimate of Rate Impact to District

SDG&E Rate	Current Bill: Feb 2011-Jan 2012	GRC Published 2014	% Increase from Current Bill to 2014	2012 - 2014 Delta
A	$123,224	$143,572	17%	$20,348
ALTOU	$222,621	$237,792	7%	$15,172
PA	$84,149	$83,294	-1%	$(855)
PA-T1	$275,860	$432,297	57%	$156,436
PA-T1CP2	$386,781	$598,535	55%	$211,755
Total	**$1,092,634**	**$1,495,490**	**37%**	**$402,856**

Source: Greg Olsen, San Diego County Water Authority

The Water Authority also applied the proposed rates to their annual pumping forecast. The result was an increase of $272,500, an overall increase of 52%. The Water Authority will pass along this increase in electric costs to member agencies as a rate increase during the next budget cycle. Similarly, the California Center for Sustainable Energy did an analysis of two of its member agencies' pumping history with a result of the increases being 34% and 48%, as shown in the table below.

PA-T Cost Comparisons

Agency	Present January 2012 Costs	SDG&E Proposed 2014 Costs	Calculated Total Change (%)
Fallbrook	$348,000	$466,300	34%
Valley Center	$414,124	$614,055	48%
Water Authority	$521,731	$794,288	52%

Source: San Diego County Water Authority Public Participation Hearing Testimony for Application No. 11-10-002

The variances between each utility's impacts are due to the different Time-Of-Use (TOU) characteristics each agency uses to move water. SDG&E is also proposing to change October from a Winter Peak Period demand to a Summer Peak Period demand. The rates for October will increase considerably as a result.

District staff is working with the District's customer service representative at SDG&E to look at alternative rate structures to determine if changing rate structures would be beneficial to the District. Five meters are currently being considered to be switched from a PA-T1 rate schedule to a PA rate schedule as a result of this review. Since the PA rate is not proposed to change substantially with SDG&E's rate proposal, this should help reduce the potential impact if SDG&E is successful increasing the PAT-1 rate schedule. The CPUC is considering a mediation process between SDG&E and their stakeholders prior to making a decision on this general rate case, however, consumer advocate groups are pressuring the CPUC to make large users pay more for the power they receive.

Sustainable Energy

Over the last few years, the District has looked at ways to decrease the dependency on SDG&E and develop alternative sources of self-generated power. In 2008, the District entered into an agreement with the County of San Diego to purchase electricity generated from methane gas produced from the landfill adjacent to the Ralph W. Chapman Water Reclamation Facility. The project, known as the Jamacha Landfill Gas Utilization Project, was partially funded through the California Center for Sustainable Energy (CCSE) and from revenues from the sale of the electricity. At the beginning of the project, SDG&E imposed a $1,553 per month stand-by demand charge (SDC) which by the end of the agreement had increased to $2,014 per month. As a result of the increased cost for the SDC, it was no longer economical for the District to buy power generated from the County of San Diego facility so the agreement was not renewed.

The District has also looked for solar power as a source of self-generated power and contracted with CSE to perform an assessment on

several District owned property. On May 6, 2011, CCSE completed the "Otay Water District Self-Generation Assessment Report" and concluded it is unlikely that these projects would result in any savings and the financial performance of such systems would be poor at current Power Purchase Agreement prices. The rate changes proposed by SDG&E will target these systems, further lowering their financial performance, if SDG&E's rate structure is approved.

Instability in the solar power industry is also a concern, as the City of San Diego School District recently found out on 24 of their buildings. Faulty panels installed in 2005 became corroded and posed a possible fire risk. A repair that is very expensive. The company that built the panels filed for bankruptcy and left the company that sold the power directly to the school district with no resources to service or maintain the solar panels.

The District is looking at ways to reduce power consumption through increased energy efficiency and also to meet the requirements of AB32. The goal of AB32 is to reduce emissions in every community an average of 15% from today's levels by 2020. To meet these goals, the District will need to improve water system energy efficiency. Increasing the use of recycled water in the District is an important element in meeting this goal. Three CIP projects in the FY 2013 budget are projects that will reduce the District's power consumption.

CIP projects P2502 pump station 803-1 modifications and P2503 pump station 850-2 modifications will result in significant electrical energy savings due to increased available suction pressure. CIP project R2091 pump station 927-1 upgrade will install more efficient pumps resulting in energy savings.

FISCAL IMPACT: ☒ Joseph R. Beachem, Chief Financial Officer

No fiscal impact as this is an informational item only.

STRATEGIC GOAL:

This report supports the District's Mission Statement, "To provide high value water and wastewater services to the customers of the Otay Water District in a professional, effective, and efficient manner" and the District's Vision, "A District that is innovative in providing water services at affordable rates, with a reputation for outstanding customer service."

LEGAL IMPACT:

None.

BK/RR/RP:jf

P:\Bob Kennedy\Staff Report\BD 11-7-12, SDG&E Electric Rate Change (BK-RR)\BD 11-7-12, Staff Report, SDG&E Electric Rate Change, (BK-RR).docx

Attachments: Attachment A – Committee Action
Attachment B – Presentation

ATTACHMENT A

SUBJECT/PROJECT: N/A	Informational Item - Proposed San Diego Gas & Electric General Rate Case Impacts on the Otay Water District

COMMITTEE ACTION:

The Finance, Administration, and Communications Committee reviewed this item at a meeting held on October 23, 2012. The Committee supported Staff's recommendation.

NOTE:

The "Committee Action" is written in anticipation of the Committee moving the item forward for Board approval. This report will be sent to the Board as a Committee approved item, or modified to reflect any discussion or changes as directed from the Committee prior to presentation to the full Board.

SDG&E General Rate Case Impacts on the Otay Water District

November 7, 2012

SDG&E has filed an application with the CPUC to update costs and electric rates to include:

- Higher basic service fees
- Rate increase to the Power-Agriculture rate known as PA-T
- Shift October time of use period from winter to higher summer fees
- Changing the rate structure for solar, wind, and micro turbine projects

2012 Calendar
Commercial, Industrial, and Agricultural Customers
On-Peak, Semi-Peak and Off-Peak Time Periods

SDGE connected
A Sempra Energy utility

October Change to Summer Rates

Extended Daylight Saving Time Winter Peak Periods	
On-Peak:	6PM - 9PM weekdays
Semi-Peak:	7AM - 6PM weekdays
	9PM - 11PM weekdays
Off-Peak:	11PM - 7AM weekdays, weekends & holidays

Existing Winter Peak Periods	
On-Peak:	5PM - 8PM weekdays
Semi-Peak:	6AM - 5PM weekdays
	8PM - 10PM weekdays
Off-Peak:	10PM - 6AM weekdays, weekends & holidays

Existing Summer Peak Periods	
On-Peak:	11AM - 6PM weekdays
Semi-Peak:	6AM - 11AM weekdays
	6PM - 10PM weekdays
Off-Peak:	10PM - 6AM weekdays, weekends & holidays

JANUARY

S	M	T	W	T	F	S
1	2	3	4	5	6	7
8	9	10	11	12	13	14
15	16	17	18	19	20	21
22	23	24	25	26	27	28
29	30	31				

FEBRUARY

S	M	T	W	T	F	S
			1	2	3	4
5	6	7	8	9	10	11
12	13	14	15	16	17	18
19	20	21	22	23	24	25
26	27	28	29			

MARCH

S	M	T	W	T	F	S
				1	2	3
4	5	6	7	8	9	10
11	12	13	14	15	16	17
18	19	20	21	22	23	24
25	26	27	28	29	30	31

APRIL

S	M	T	W	T	F	S
1	2	3	4	5	6	7
8	9	10	11	12	13	14
15	16	17	18	19	20	21
22	23	24	25	26	27	28
29	30					

MAY

S	M	T	W	T	F	S
		1	2	3	4	5
6	7	8	9	10	11	12
13	14	15	16	17	18	19
20	21	22	23	24	25	26
27	28	29	30	31		

JUNE

S	M	T	W	T	F	S
					1	2
3	4	5	6	7	8	9
10	11	12	13	14	15	16
17	18	19	20	21	22	23
24	25	26	27	28	29	30

JULY

S	M	T	W	T	F	S
1	2	3	4	5	6	7
8	9	10	11	12	13	14
15	16	17	18	19	20	21
22	23	24	25	26	27	28
29	30	31				

AUGUST

S	M	T	W	T	F	S
			1	2	3	4
5	6	7	8	9	10	11
12	13	14	15	16	17	18
19	20	21	22	23	24	25
26	27	28	29	30	31	

SEPTEMBER

S	M	T	W	T	F	S
						1
2	3	4	5	6	7	8
9	10	11	12	13	14	15
16	17	18	19	20	21	22
23	24	25	26	27	28	29
30						

OCTOBER

S	M	T	W	T	F	S
	1	2	3	4	5	6
7	8	9	10	11	12	13
14	15	16	17	18	19	20
21	22	23	24	25	26	27
28	29	30	31			

NOVEMBER

S	M	T	W	T	F	S
				1	2	3
4	5	6	7	8	9	10
11	12	13	14	15	16	17
18	19	20	21	22	23	24
25	26	27	28	29	30	

DECEMBER

S	M	T	W	T	F	S
						1
2	3	4	5	6	7	8
9	10	11	12	13	14	15
16	17	18	19	20	21	22
23	24	25	26	27	28	29
30	31					

Change to Summer Pricing

Estimate of Rate Impact to District

SDGE Rate	Current Bill: Feb 2011 - Jan 2012	GRC Published Current Rate	GRC Published 2013	GRC Published 2014	% Increase from Current Bill to 2014	2012 - 2014 Delta
A	$ 123,224	$ 135,830	$ 141,909	$ 143,572	17%	$ 20,348
ALTOU	$ 222,621	$ 232,772	$ 239,230	$ 237,792	7%	$ 15,172
PA	$ 84,149	$ 82,520	$ 84,031	$ 83,294	-1%	$ (855)
PA - T1	$ 275,860	$ 288,062	$ 439,121	$ 432,297	57%	$ 156,436
PA-T1CP2	$ 386,781	$ 332,615	$ 607,547	$ 598,535	55%	$ 211,755
	$ 1,092,634	$ 1,071,800	$ 1,511,838	$ 1,495,490	37%	$ 402,856

7/18/2012, by Greg Olsen, Water Authority

Estimate of Rate Impact to Other Agencies

Agency	Present January 2012 Costs	SDG&E Proposed 2014 Costs	Calculated Total Change (%)
Fallbrook	$348,000	$466,300	34%
Valley Center	$414,124	$614,055	48%
Water Authority	$521,731	$794,288	52%

SDG&E Rate Increase Drivers

- $1.1 Billion to cover wildfires cost
- Recent shutdown of San Onofre
- Deployment of smart grid technology
- System Reliability
- Consumer advocates pressuring CPUC to have large users pay more for the power they receive

Power Generation Alternatives

Ralph W. Chapman Water Recycling Facility

Microturbine System

"Skid"

Raw LFG is transported to the skid, where it is cleaned, dried, and compressed. The treated LFG is then transported to the water reclamation plant, to fuel the onsite microturbines.

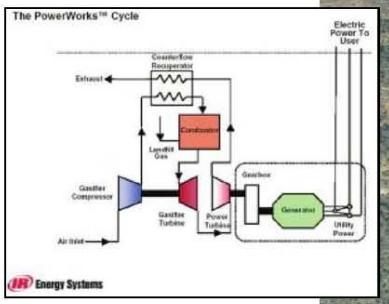

The Microturbine's compressor draws in outside air and compresses it to high pressure. The pressurized air enters the combustion area, where fuel injectors constantly supply treated LFG. The steady combustion byproduct that is produced rushes into the turbine, turning the shaft, which turns the generator. The generator, in turn, creates electricity.

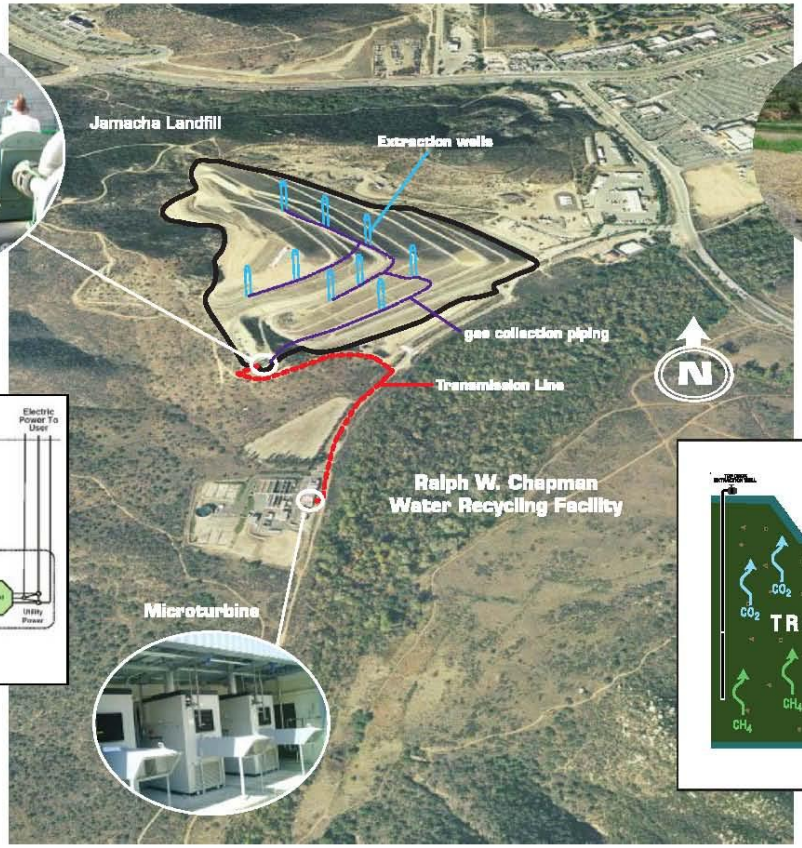

Extraction well

Landfill gas (LFG) is mainly comprised of methane (CH_4) and carbon dioxide (CO_2). The gas collection system extracts and transports the LFG to the gas scrubber and compressor, also know as the "skid."

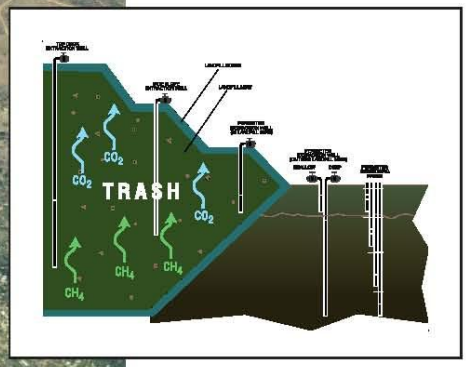

CIP P2497

California Center for Sustainable Energy Solar Power Assessment Report

- Operations Building
- Administration Building
- 520 Reservoir site
- 624-3 Reservoir Site

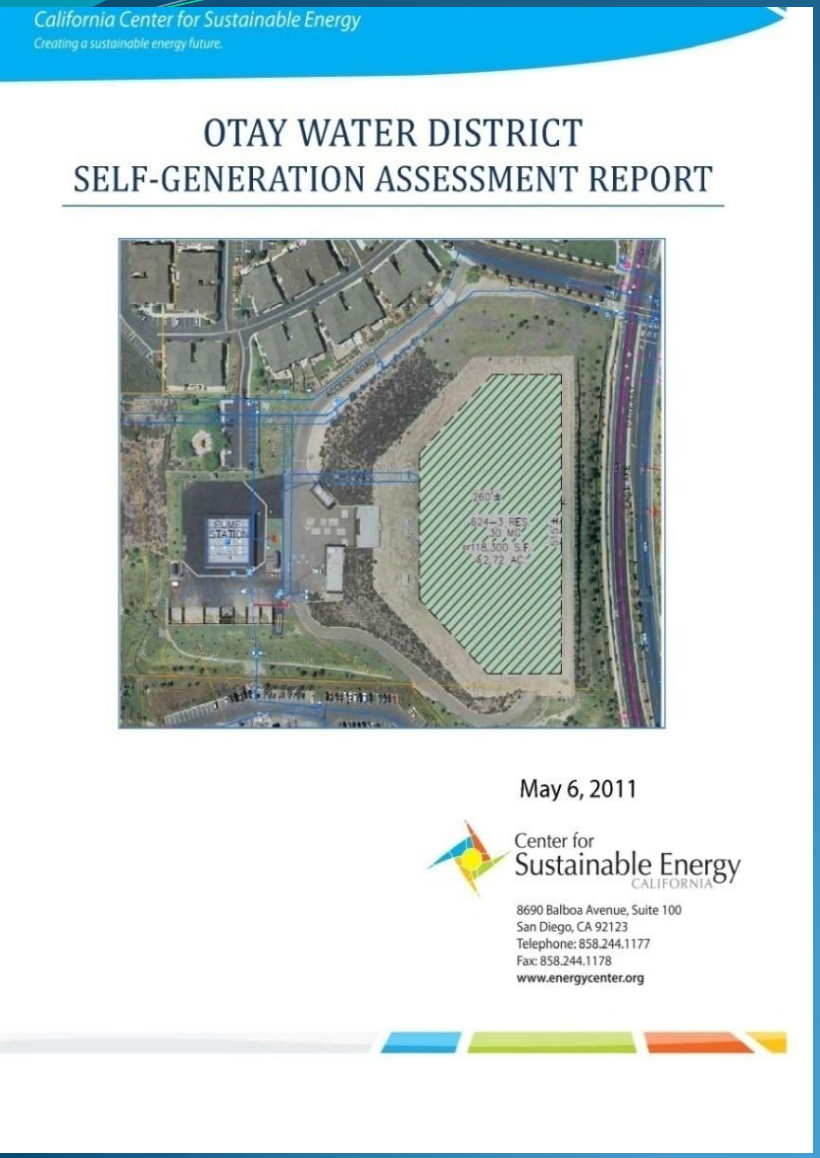

Major Findings-

May 6, 2011 Report

Administration and Operations Buildings

- "Financial performance would be poor at current PPA prices."

Other District Sites

- "It is unlikely that installing PV behind any District meter will result in any cost savings."

Other Concerns:

- Future SDG&E rate changes targeting PV systems
- Instability in the solar power industry
- Defective equipment

AB 32

Meeting AB 32 goals means reducing emissions an average of 15% from today's levels by 2020.

- Reduce Non-Renewable Electricity Use for the Treatment and Conveyance of Water
- Increase Water Recycling

District Projects

- P2502 PS 803-1 Modifications
- P2503 PS 850-2 Modifications
- R2091 PS 927-1 Upgrade

Next Steps:

- CPUC considering mediation process between SDG&E and stakeholders
- Staff working with SDG&E representative to look at alternate rate structures beneficial to the District

OTAY WATER DISTRICT